Holland®
SAF-HOLLAND Group

HOLLAND FIFTH WHEELS
ORIGINAL PARTS CATALOG

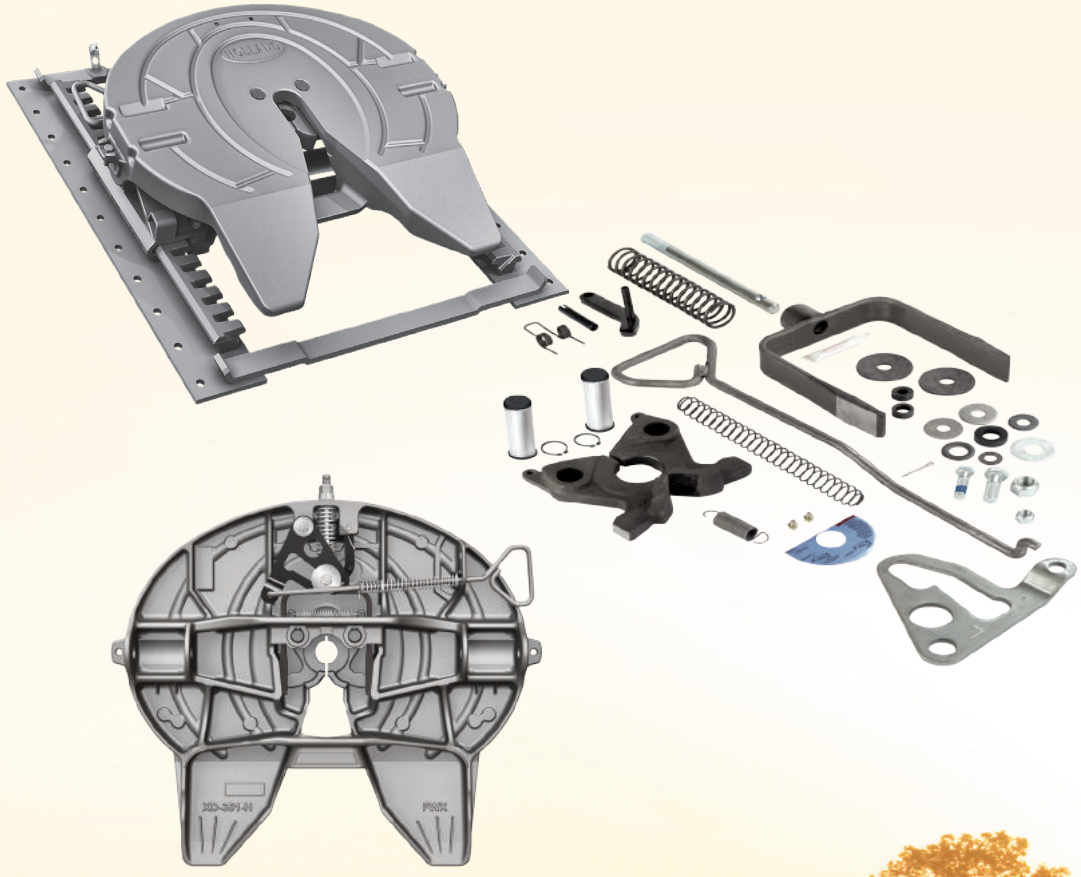



SAF Holland
ORIGINAL PARTS™

XL-FW10081PM-en-US Rev D

FRONT TO BACK

SAF-HOLLAND ORIGINAL PARTS



NEWAY SUSPENSIONS



Holland FIFTH WHEELS

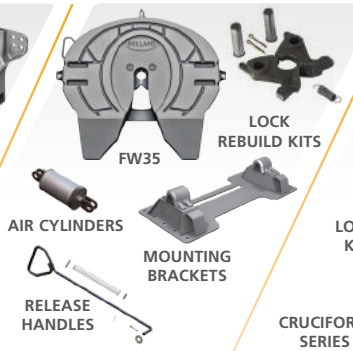

Holland KINGPINS



SAF SUSPENSIONS



Holland LANDING GEAR



Holland COUPLINGS



Holland BUMPER TUBES



Call 800.876.3929
safholland.us

SAF Holland ORIGINAL PARTS™

SAF Holland NEWAY

ORIGINAL SERVICE PARTS TO KEEP YOU ROLLING

SAF-HOLLAND Group

Contents & Introduction .....

Fifth Wheel Model Identification 1-1to 1-7

FW35
- Exploded 1-8
- Parts List and Dimensional View 1-9
- Replacement Kits ..... 1-10 to 1-17
- Assembly Breakdown Code ..... 1-18 to 1-19
- Mounting Dimensions ..... 1-20 to 1-39

FW3500
- Exploded 1-40
- Parts List and Dimensional View 1-41
- Replacement Kits ..... 1-42 to 1-46
- Assembly Breakdown Code 1-47
- Mounting Dimensions ..... 1-48 to 1-67

FW31
- Exploded 1-68
- Parts List and Dimensional View 1-69
- Replacement Kits ..... 1-70 to 1-75
- Assembly Breakdown Code ..... 1-76 to 1-77
- Mounting Dimensions ..... 1-78 to 1-91

FW33
- Exploded 1-92
- Parts List and Dimensional View 1-93
- Replacement Kits ..... 1-94 to 1-99
- Assembly Breakdown Code ..... 1-100 to 1-101
- Mounting Dimensions ..... 1-102 to 1-115

FW17
- Exploded 1-116
- Parts List and Dimensional View 1-117
- Replacement Kits ..... 1-118 to 1-121
- Assembly Breakdown Code ..... 1-122 to 1-123
- Mounting Dimensions ..... 1-124 to 1-133

FW16
- Exploded 1-134
- Parts List and Dimensional View 1-135
- Replacement Kits ..... 1-136 to 1-137
- Assembly Breakdown Code ..... 1-138 to 1-139
- Mounting Dimensions ..... 1-140 to 1-145

FWAL
- Exploded 1-146
- Parts List and Dimensional View 1-147
- Replacement Kits ..... 1-148 to 1-150
- Assembly Breakdown Code 1-151
- Mounting Dimensions ..... 1-152 to 1-159

FW8
- Exploded 1-160
- Parts List and Dimensional View 1-161
- Replacement Kits ..... 1-162 to 1-169
- Assembly Breakdown Code ..... 1-170 to 1-171
- Mounting Dimensions ..... 1-172 to 1-191

FW83
- Exploded 1-192
- Parts List and Dimensional View 1-193
- Replacement Kits ..... 1-194 to 1-201
- Assembly Breakdown Code ..... 1-202 to 1-203
- Mounting Dimensions ..... 1-204 to 1-213

FW2000
- Exploded 1-214
- Parts List and Dimensional View 1-215
- Replacement Kits ..... 1-216 to 1-219
- Assembly Breakdown Code 1-220
- Mounting Dimensions ..... 1-221 to 1-239

FWS1
- Exploded 1-240
- Parts List and Dimensional View 1-241
- Replacement Kits ..... 1.242 to 1-245
- Assembly Breakdown Code 1-246
- Mounting Dimensions ..... 1-247 to 1-253

FWS2
- Exploded 1-254
- Parts List and Dimensional View 1-255
- Replacement Kits ..... 1.256 to 1-259
- Assembly Breakdown Code 1-260
- Mounting Dimensions ..... 1-261 to 1-267

Warranty

Refer to the complete warranty for the country and product in which the parts will be used. A copy of the written warranty is included with the product and can be found on the SAF-HOLLAND web site. www.safholland.us

Original Parts

To ensure optimal performance of HOLLAND Fifth Wheels and to prevent voiding any warranty coverage; we highly recommend the use of only SAF-HOLLAND Original Parts.

Technical Support

Updates to this manual will be published as necessary online.

 Amendments and errors reserved. © SAF-HOLLAND, Inc.

Simplex SE
Exploded..... 1-268
Parts List and Dimensional View..... 1-269
Replacement Kits ..... 1-270 to 1-271
Mounting Dimensions ..... 1-272 to 1-279
Simplex Lite Straight Pull
Exploded..... 1-280
Parts List and Dimensional View..... 1-281
Replacement Kits ..... 1-282 to 1-283
Mounting Dimensions ..... 1-284 to 1-291
Simplex Lite Rotary Pull
Exploded..... 1-292
Parts List and Dimensional View..... 1-293
Replacement Kits ..... 1-294 to 1-295
Mounting Dimensions ..... 1-296 to 1-303
FW0070
Exploded..... 1-304
Parts List and Dimensional View..... 1-305
Replacement Kits ..... 1.306 to 1-307
Mounting Dimensions ..... 1-308 to 1-309
FW0100/ FW0165
Exploded..... 1-310
Parts List and Dimensional View..... 1-311
Replacement Kits ..... 1.312 to 1-313
Mounting Dimensions ..... 1-314 to 1-315
Holland Simplex II SE
Exploded..... 1-316
Parts List and Dimensional View..... 1-317
Replacement Kits ..... 1-318 to 1-319
Simplex II
Exploded..... 1-320
Parts List and Dimensional View..... 1-321
RH and LH Dimensional Views..... 1-322
Replacement Kits ..... 1-323 to 1-325
Simplex RH
Exploded..... 1-326
Parts List and Dimensional View..... 1-327
Replacement Kits ..... 1-328 to 1-329
Simplex II Rotary
Exploded..... 1-330
Parts List and Dimensional View..... 1-331
Replacement Kits ..... 1-332 to 1-333
Castloc Rotary Pull
Exploded..... 1-334
Parts List and Dimensional View..... 1-335
Replacement Kits ..... 1-336 to 1-337
Castloc II Straight Pull
Exploded..... 1-338
Parts List and Dimensional View..... 1-339
Replacement Kits ..... 1-340 to 1-341
Simplex 400C
Exploded..... 1-342
Parts List and Dimensional View..... 1-343
Replacement Kits ..... 1-344 to 1-345
FW67/ FW69
Exploded..... 1-346
Parts List and Dimensional View..... 1-347
Mounting Exploded View 1-348
Mounting Parts List and Dimensional View..... 1-349
Replacement Kits ..... 1-350 to 1-353
FW2080
Exploded..... 1-354
Parts List and Dimensional View..... 1-355
Dimensional Views..... 1-356
Replacement Kits 1-357
FW2800/ FW2900
Exploded..... 1-358
Parts List and Dimensional View..... 1-359
Single Cylinder Elevating Parts Explosion..... 1-360
Twin Cylinder Elevating Parts Explosion..... 1-361
Single Cylinder Elevating Piping Parts List 1-362
Twin Cylinder Elevating Piping Parts List 1-363
Dimensional Views..... 1-364 to 1-367
Replacement Kits ..... 1-368 to 1-369

Warranty

Refer to the complete warranty for the country and product in which the parts will be used. A copy of the written warranty is included with the product and can be found on the SAF-HOLLAND web site. www.safholland.us

Original Parts

To ensure optimal performance of HOLLAND Fifth Wheels and to prevent voiding any warranty coverage; we highly recommend the use of only SAF-HOLLAND Original Parts.

Technical Support

Updates to this manual will be published as necessary online.

XL-FW10081PM-en-US Rev D 2016-03-01 Amendments and errors reserved. © SAF-HOLLAND, Inc.

FW35-03344, XA-351-03505 & XA-351-UB
Exploded 1-370
Parts List and Dimensional View 1-371
Dimensional View 1-372
Replacement Kits 1-373
FW1560-C
Exploded 1-374
Parts List and Dimensional View 1-375
Replacement Kits 1-376
Dimensional Views 1-377
Simplex Yard Spotter
Exploded 1-378
Parts List and Dimensional View 1-379
Replacement Kits ..... 1-380 to 1-381
Mounting Dimensions ..... 1-382 to 1-385
FW2870-03184
Exploded 1-386
Parts List and Dimensional View 1-387
FW0001/ FW0002
Exploded 1-388
Parts List and Dimensional View 1-389
Dimensional Views 1-390
Replacement Kits 1-391
FW6000
Exploded 1-392
Parts List and Dimensional View 1-393
Dimensional Views 1-394
Replacement Kits 1-395
FW1900
Exploded 1-396
Parts List and Dimensional View 1-397
Dimensional Views ..... 1-398 to 1-399
Replacement Kits ..... 1-400 to 1-401
FW1226
With Right or Left Hand Release Exploded 1-402
With Front or Left Hand Release Exploded 1-403
Parts List and Dimensional View ..... 1-404 to 1-405
Replacement Kits ..... 1-406 to 1-407
Kits
Holland Fifth Wheel Kit "Quick List 1-408
Holland Simplex Kits 1-409
Kits for Discontinued Simplex ..... 1-410 to 1-411
Fifth Wheel Replacement Air Cylinders 1-412
Rubber Upshock Cushions 1-413
Brackets
Standard Capacity Stationary ..... 2-1 to 2-21
Standard Capacity No-Tilt Stationary ..... 2-22 to 2-24
Standard Capacity Sliders ..... 2-25 to 2-48
Standard Capacity No-Tilt Sliders ..... 2-45 to 2-55
Standard Capacity Stationary Kompensator® ..... 2-56 to 2-63
Standard Capacity Sliding Kompensator® ..... 2-64 to 2-69
Accessories
Replacement Handles ..... 3-1 to 3-25
Bracket Pins ..... 3-26 to 3-30
Lock Pins ..... 3-31 to 3-39
Parts Index ..... 4-1 to 4-20
Glossary 4-20

Warranty

Refer to the complete warranty for the country and product in which the parts will be used. A copy of the written warranty is included with the product and can be found on the SAF-HOLLAND web site. www.safholland.us

Original Parts

To ensure optimal performance of HOLLAND Fifth Wheels and to prevent voiding any warranty coverage; we highly recommend the use of only SAF-HOLLAND Original Parts.

Technical Support

Updates to this manual will be published as necessary online.

 Amendments and errors reserved. © SAF-HOLLAND, Inc.

pod® parts on demand

QUICK & EASY PARTS ONLINE

SEARCH

Parts Knowledge at the Tip of Your Finger

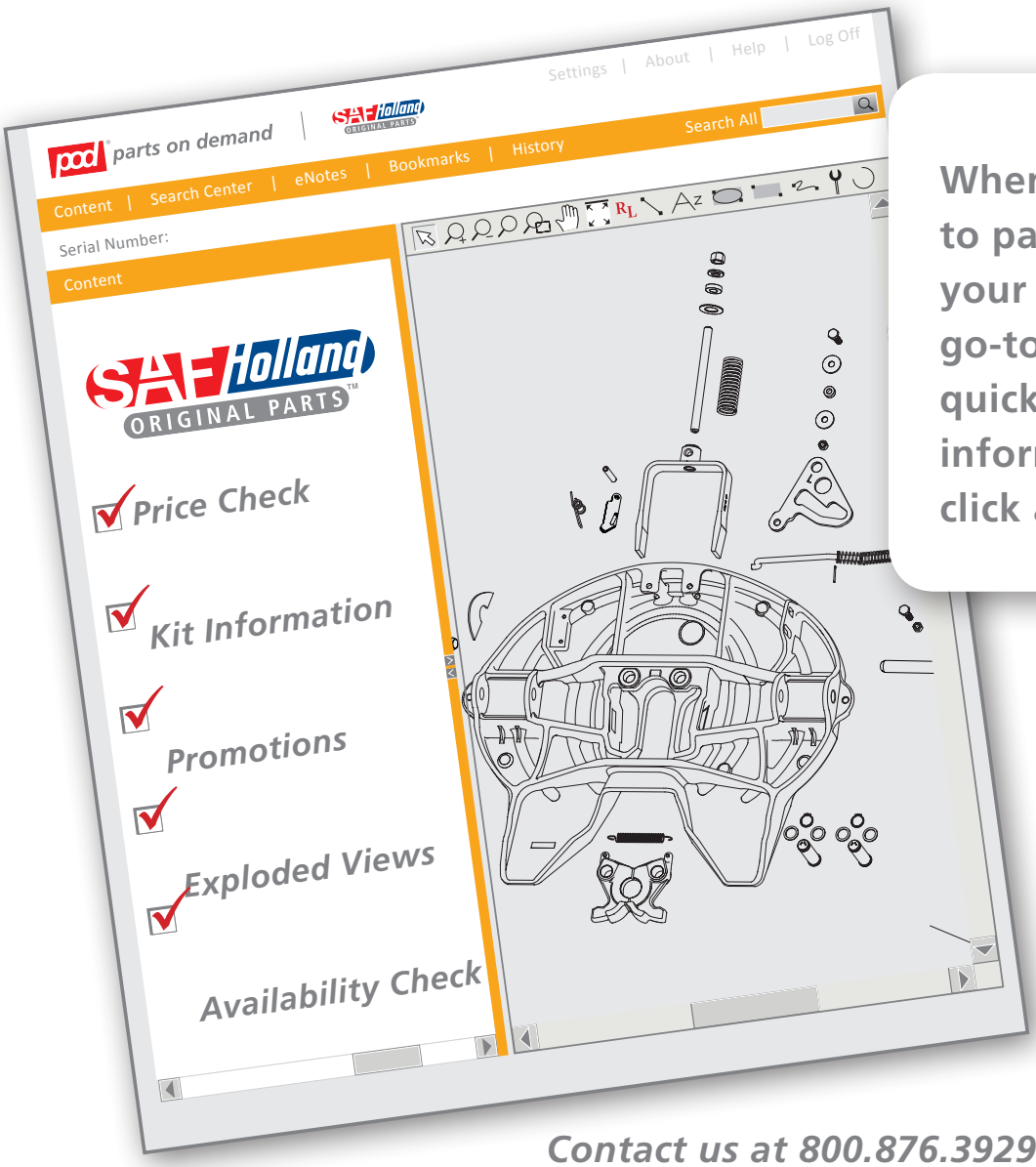

When it comes to parts, become your customers' go-to source with quick and accurate information just a click away.

SAF Holland

Holland

NEWAY

Contact us at 800.876.3929 to learn more

www.safholland.us

SAF-Holland ORIGINAL PARTS™

FW35

See Page 1-8

55,000 lbs. Maximum Vertical Load
150,000 lbs. Maximum Drawbar Pull

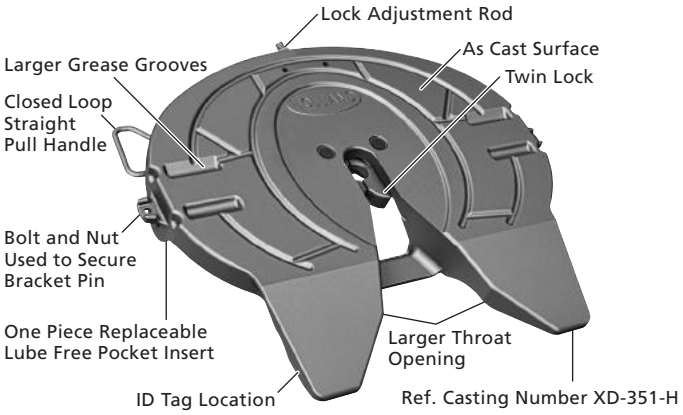

Old Style FW35

See Page 1-8

55,000 lbs. Maximum Vertical Load
150,000 lbs. Maximum Drawbar Pull

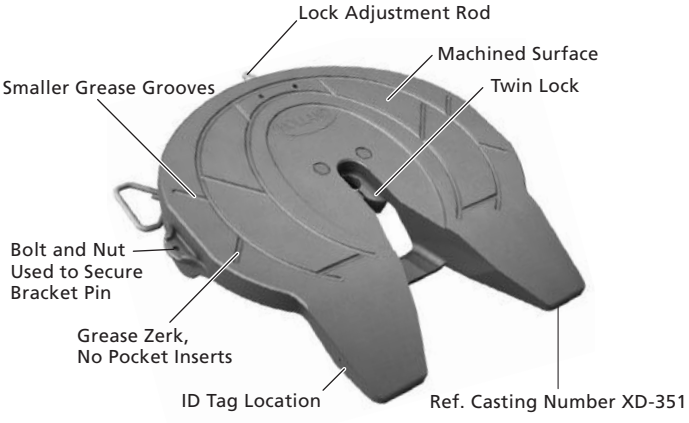

FW3500

See Page 1-40

40,000 lbs. Maximum Vertical Load
150,000 lbs. Maximum Drawbar Pull

Discontinued - Replacement Parts Only

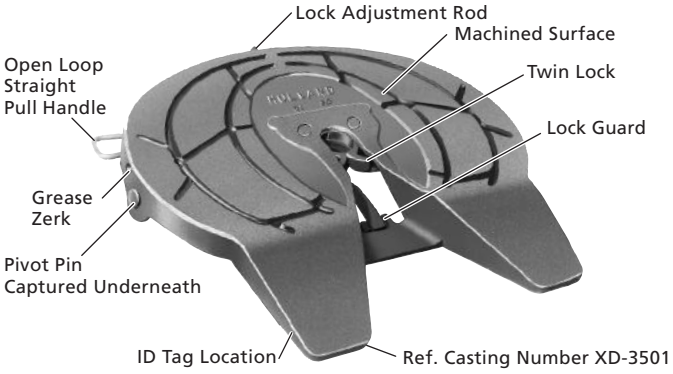

FW31 (NoLube™)

See Page 1-68

55,000 lbs. Maximum Vertical Load
150,000 lbs. Maximum Drawbar Pull

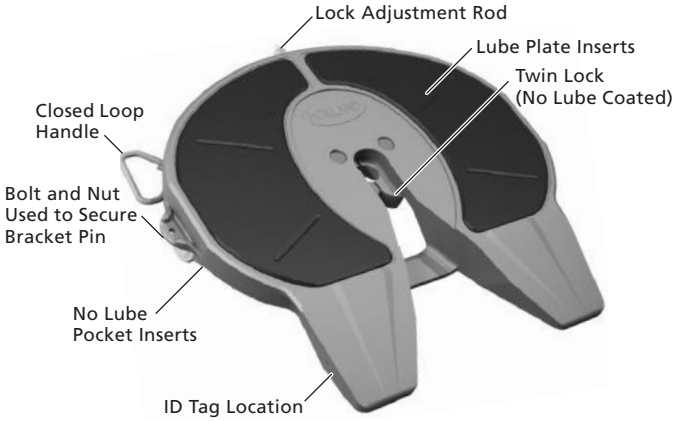

FW33 (Low Lube)

See Page 1-92

55,000 lbs. Maximum Vertical Load
150,000 lbs. Maximum Drawbar Pull

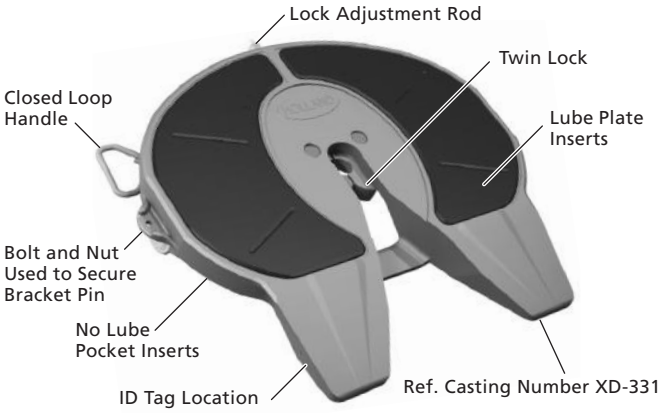

FW17

See Page 1-116

50,000 lbs. Maximum Vertical Load
150,000 lbs. Maximum Drawbar Pull



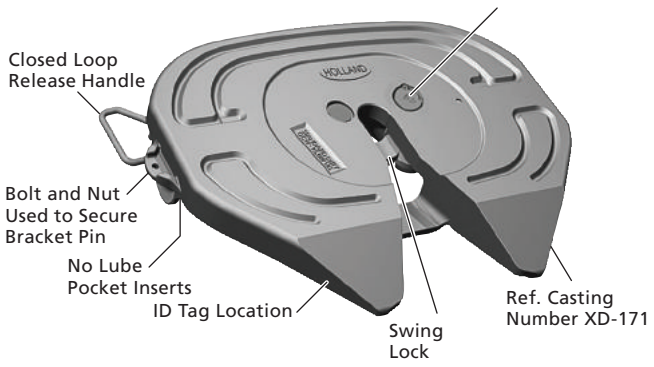

Standard Duty

 Amendments and errors reserved. © SAF-HOLLAND, Inc.

Standard Duty

FW16

See Page1-134

50,000 lbs. Maximum Vertical Load
150,000 lbs. Maximum Drawbar Pull

Available 2013

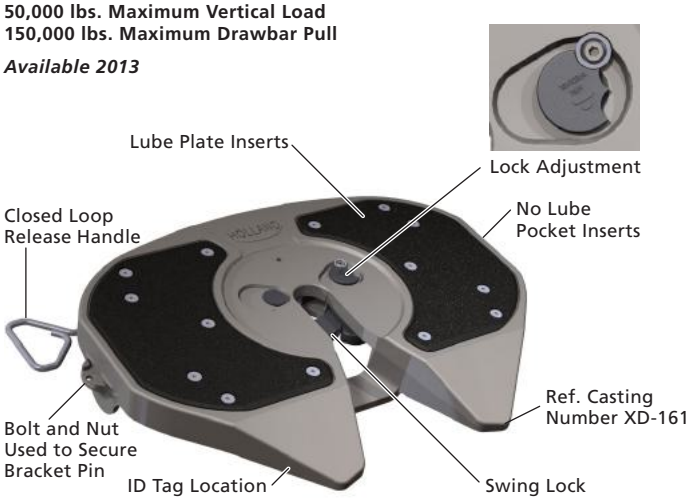

FWAL

See Page 1-146

55,000 lbs. Maximum Vertical Load
150,000 lbs. Maximum Drawbar Pull

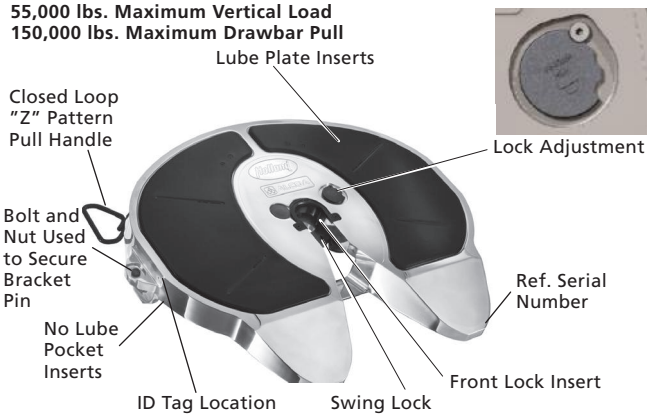

FW8

See Page 1-160

45,000 lbs. Maximum Vertical Load
150,000 lbs. Maximum Drawbar Pull

Discontinued - Replacement Parts Only

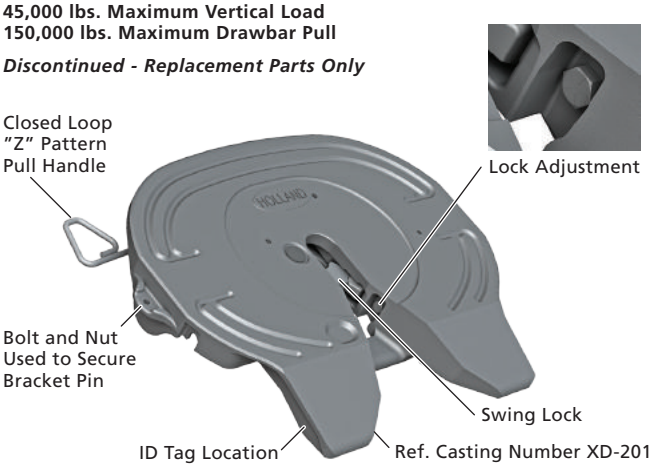

FW83

See Page 1-192

45,000 lbs. Maximum Vertical Load
150,000 lbs. Maximum Drawbar Pull

Discontinued - Replacement Parts Only

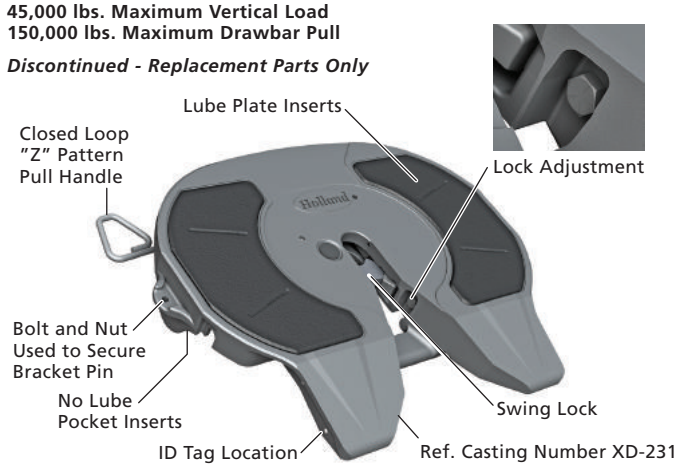

FW2000

See Page 1-214

40,000 lbs. Maximum Vertical Load
150,000 lbs. Maximum Drawbar Pull

Discontinued - Replacement Parts Only

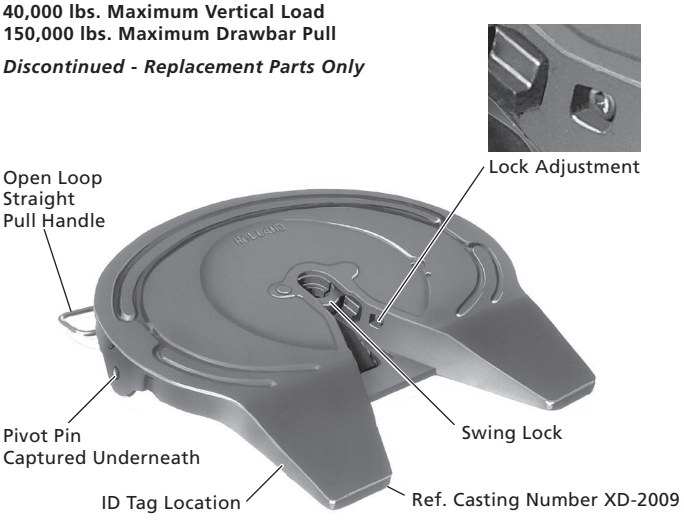

FWS1

See Page 1-240

50,000 lbs. Maximum Vertical Load
150,000 lbs. Maximum Drawbar Pull

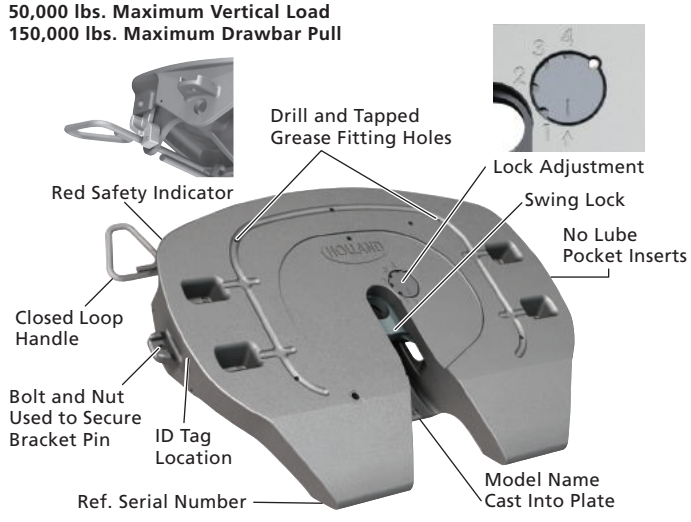

XL-FW10081PM-en-US Rev D 2016-03-01 Amendments and errors reserved. © SAF-HOLLAND, Inc.

Standard Duty

FWS2

See Page 1-252

55,000 lbs. Maximum Vertical Load
150,000 lbs. Maximum Drawbar Pull

Discontinued - Replacement Parts Only





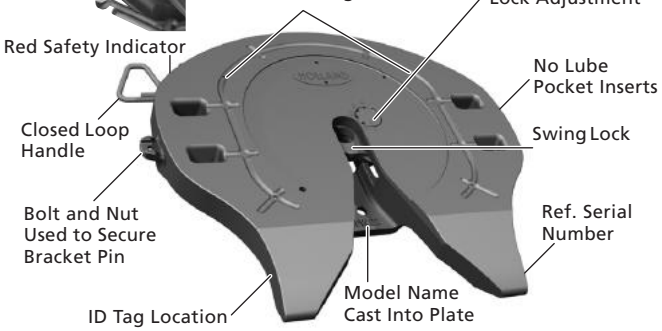

Simplex SE

See Page 1-268

55,000 lbs. Maximum Vertical Load
150,000 lbs. Maximum Trailing Load

Discontinued - Replacement Parts Only



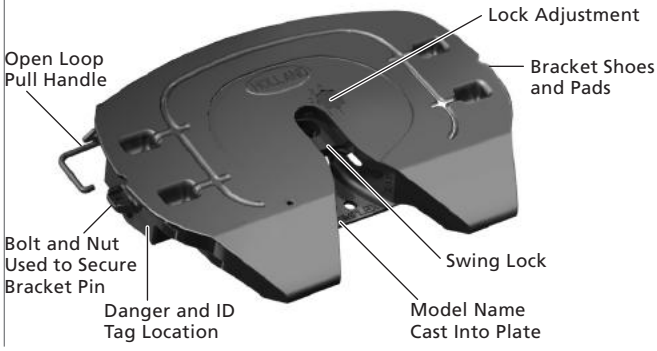

Simplex Lite Straight Pull

See Page1-280

50,000 lbs. Maximum Vertical Load
150,000 lbs. Maximum Trailing Load

Discontinued - Replacement Parts Only

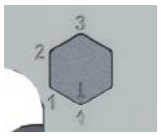

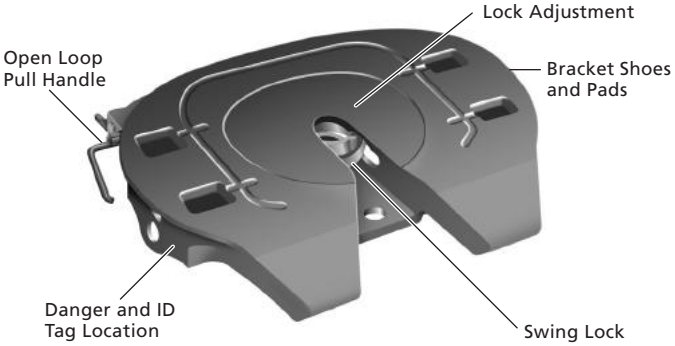

Simplex Lite Rotary

See Page 1-292

50,000 lbs. Maximum Vertical Load
150,000 lbs. Maximum Trailing Load

Discontinued - Replacement Parts Only

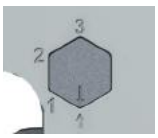

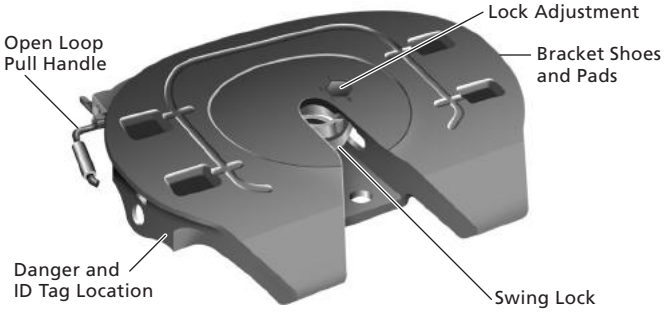

FW0070

See Page 1-304

70,000 lbs. Maximum Vertical Load
200,000 lbs. Maximum Drawbar Pull (Stationary)
150,000 lbs. Maximum Drawbar Pull (Sliding)
Available in 2" and 3.5" Kingpin Lock



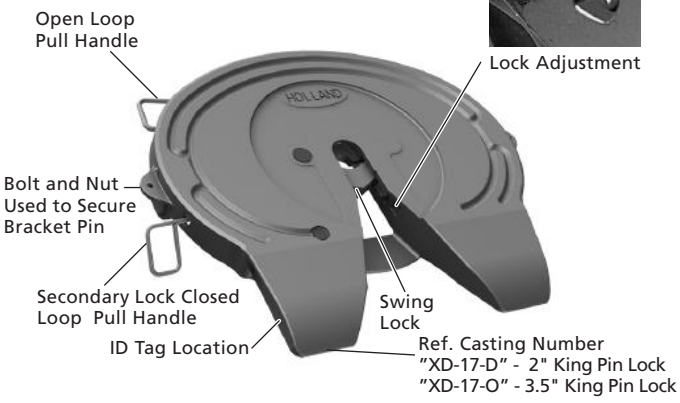

FW0100

See Page 1-310

100,000 lbs. Maximum Vertical Load
200,000 lbs. Maximum Drawbar Pull
Available in 2" and 3.5" Kingpin Lock



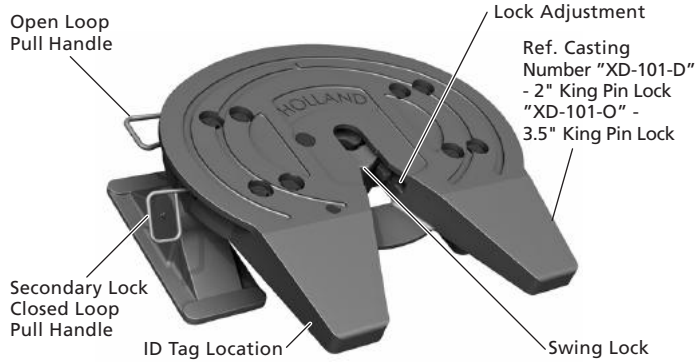

Heavy Duty

 Amendments and errors reserved. © SAF-HOLLAND, Inc.

Heavy Duty

FW0165

See Page 1-310

165,000 lbs. Maximum Vertical Load
200,000 lbs. Maximum Drawbar Pull
Available in 2" and 3.5" Kingpin Lock

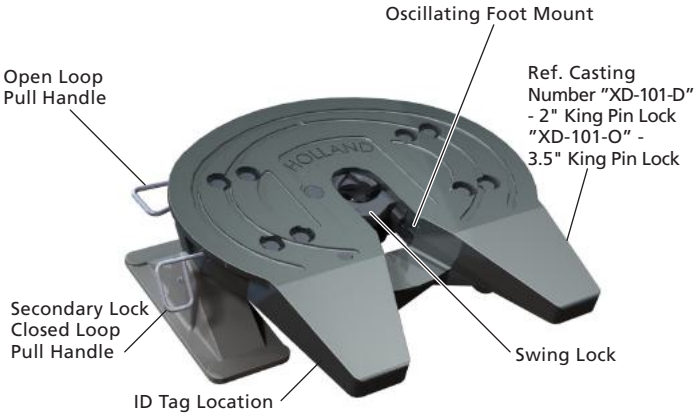

Simplex II SE

See Page 1-316

70,000 lbs. Maximum Vertical Load
200,000 lbs. Maximum Trailing Load

Discontinued - Replacement Parts Only

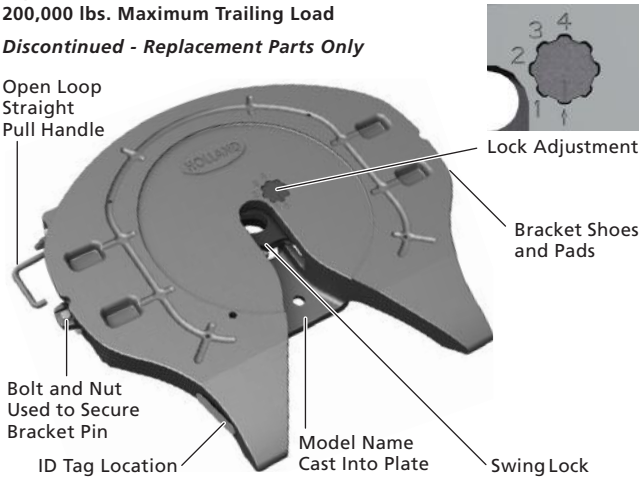

Simplex II SE RH

See Page 1-316

70,000 lbs. Maximum Vertical Load
200,000 lbs. Maximum Trailing Load

Discontinued - Replacement Parts Only

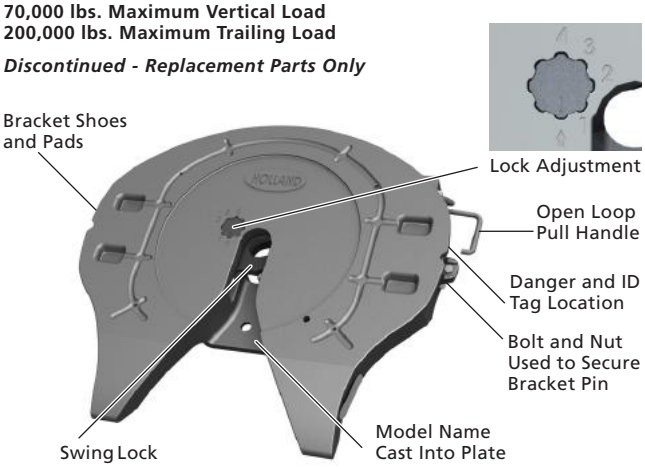

Simplex II

See Page 1-320

70,000 lbs. Maximum Vertical Load
200,000 lbs. Maximum Trailing Load

Discontinued - Replacement Parts Only

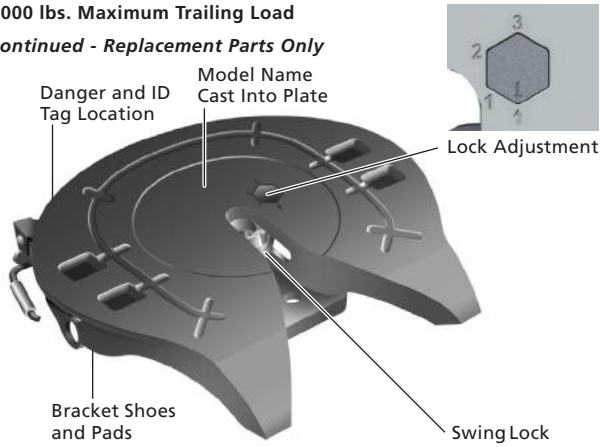

Simplex II RH

See Page 1-326

70,000 lbs. Maximum Vertical Load
200,000 lbs. Maximum Trailing Load

Discontinued - Replacement Parts Only

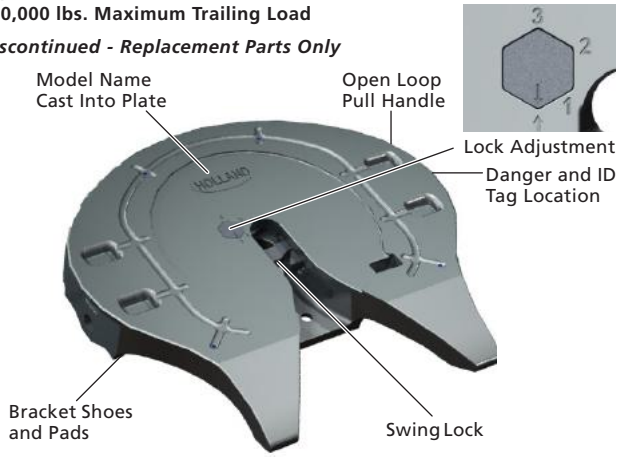

Simplex IIR Rotary Pull

See Page 1-330

70,000 lbs. Maximum Vertical Load
200,000 lbs. Maximum Trailing Load

Discontinued - Replacement Parts Only

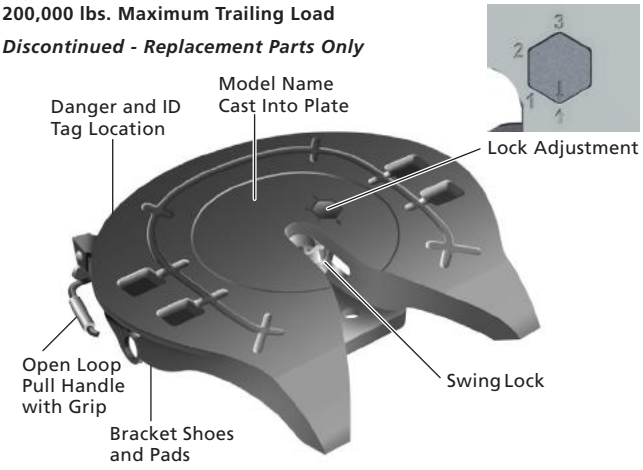

XL-FW10081PM-en-US Rev D 2016-03-01 Amendments and errors reserved. © SAF-HOLLAND, Inc.

Castloc Rotary Pull

See Page 1-334

70,000 lbs. Maximum Vertical Load
200,000 lbs. Maximum Trailing Load

Discontinued - Replacement Parts Only

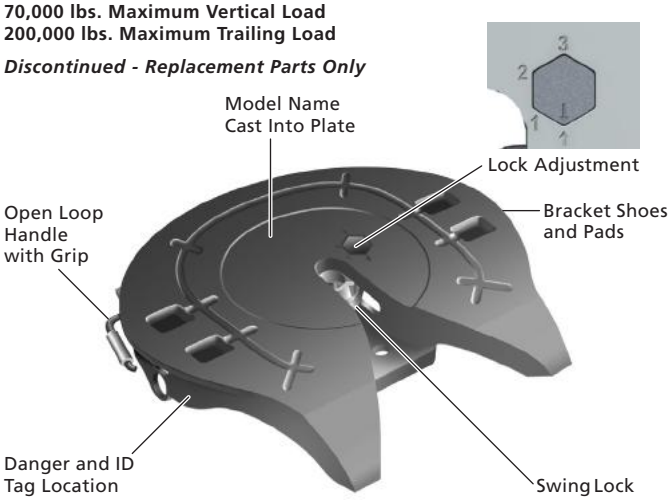

Castloc II Straight Pull

See Page 1-340

70,000 lbs. Maximum Vertical Load
200,000 lbs. Maximum Trailing Load

Discontinued - Replacement Parts Only

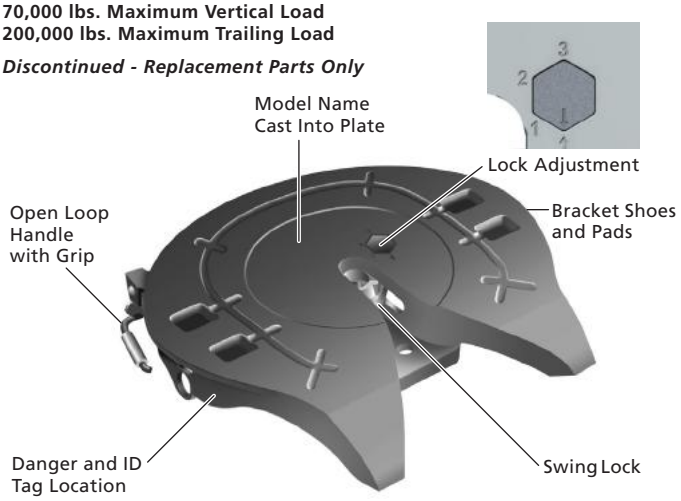

FW67 Air Elevating Lift

See Page 1-346

40,000 lbs. Maximum Vertical Lift

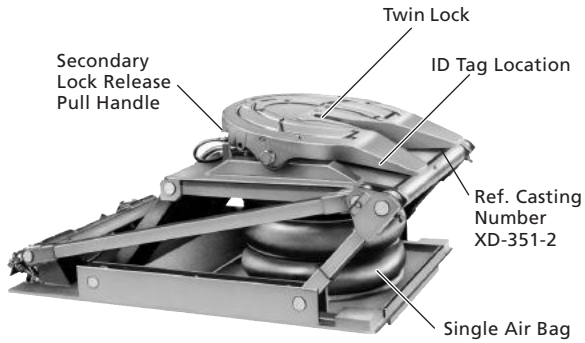

FW2800-X / 2900-X Hydralic Elevating Lift

50,000 lbs. Maximum Vertical Lift
Single Cylinder

See Page 1-358

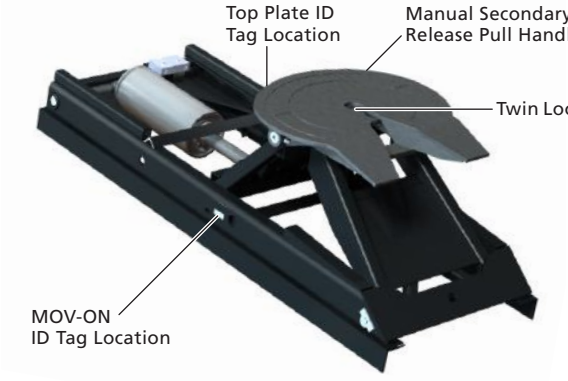

FW2800-5X / 2900-5X Hydralic Elevating Lift

See Page 1-358

100,000 lbs. Maximum Vertical Lift
Twin Cylinder

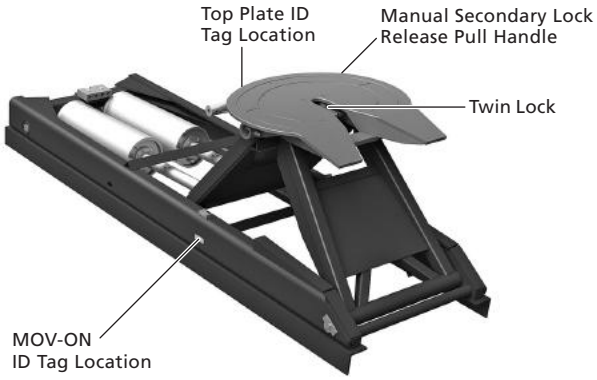

FW2080 Oscillating

See Page 1-354

70,000 lbs. Maximum Vertical Load
200,000 lbs. Maximum Drawbar Pull
Available in 2" and 3.5" Kingpin Locks

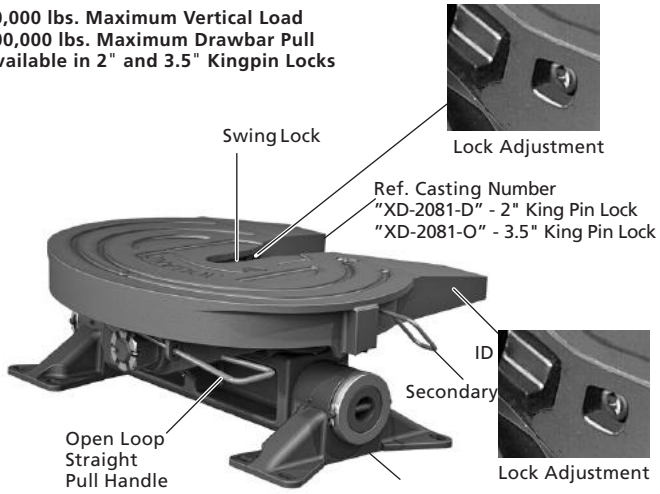

Specialized

 Amendments and errors reserved. © SAF-HOLLAND, Inc.

FW35-03344 Standard Duty Yard Spotter

See Page 1-370

70,000 lbs. Maximum Vertical Load

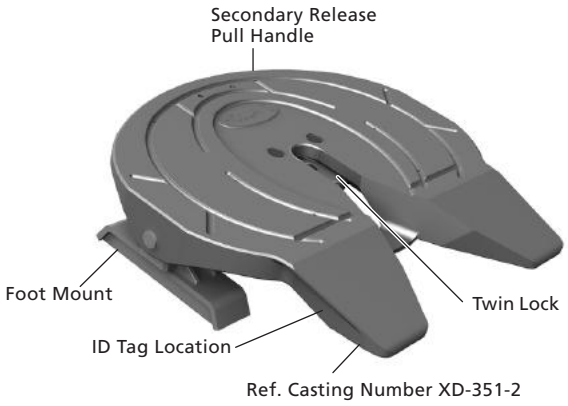

FW1560-C

See Page 1-374

50,000 lbs. Maximum Vertical Load

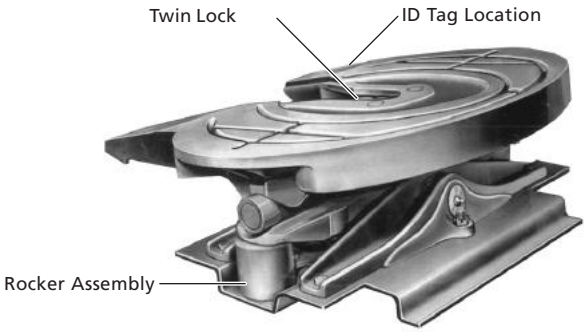

Simplex Yard Spotter Standard Capacity

See Page 1-378

70,000 lbs. Maximum Vertical Load
200,000 lbs. Maximum Trailing Load

Discontinued - Replacement Parts Only

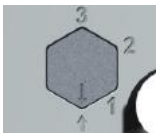

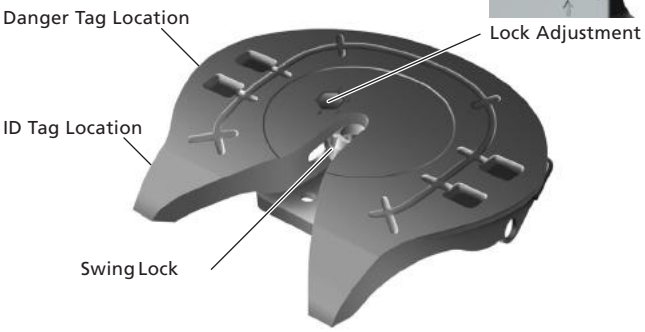

FW2870-03184 Semi-Oscillating Extra Capacity Yard Spotter

See Page 1-386

100,000 lbs. Maximum Vertical Load

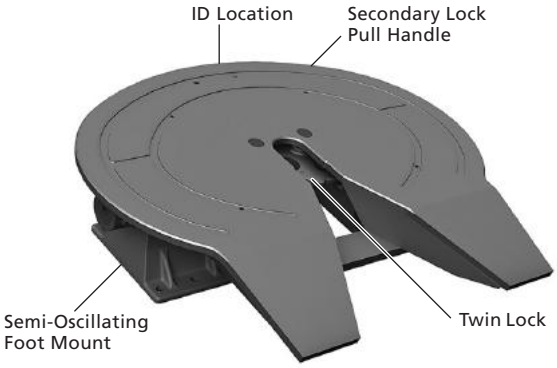

FW0001

See Page 1-388

8,000 lbs. Maximum Vertical Load
32,000 lbs. Maximum Gross Trailer Weight

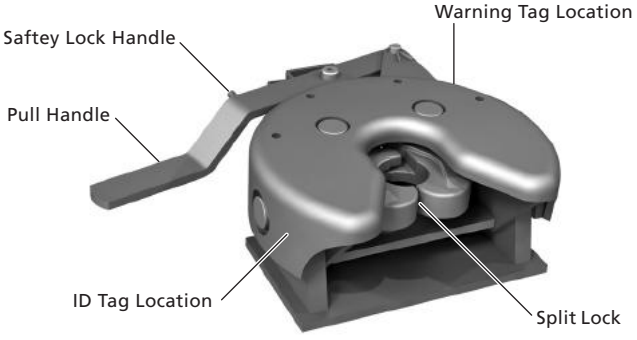

FW0002-35/-40/-45

See Page 1-388

8,000 lbs. Maximum Vertical Load
32,000 lbs. Maximum Gross Trailer Weight

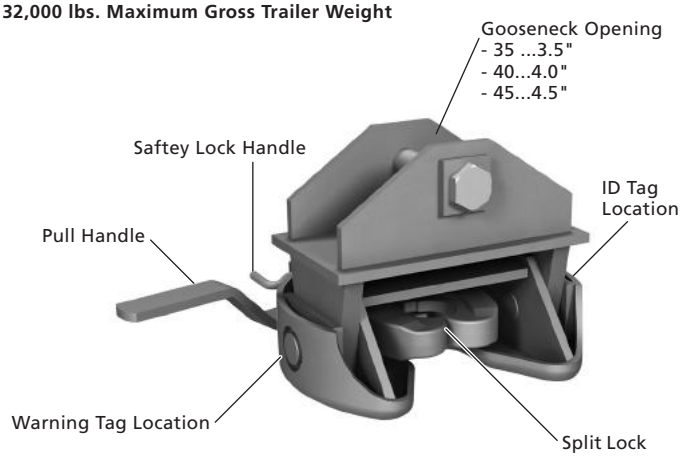

XL-FW10081PM-en-US Rev D 2016-03-01 Amendments and errors reserved. © SAF-HOLLAND, Inc.

FW1900 - Foot Mount Right Hand
FW1900-LH - Foot Mount Left Hand
FW1900-20 - Mounting Plate Right Hand

20,000 lbs. Maximum Vertical Load
40,000 lbs. Maximum Drawbar Pull

See Page 1-396

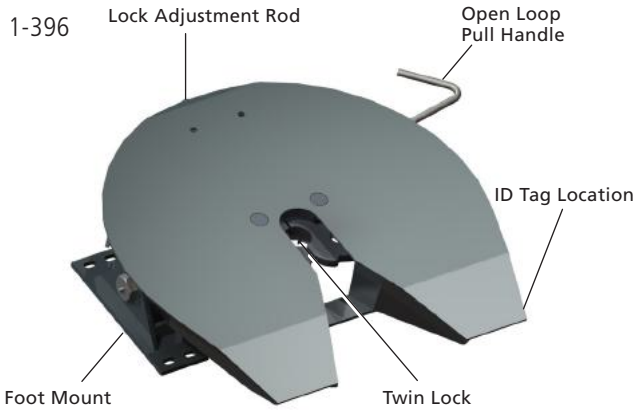

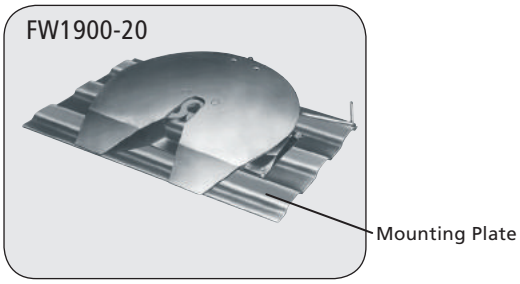

FW6000 Foot Mount
FW6000-10 with Adjustable Mounting Box
FW6000-20 with Mounting Plate

12,000 lbs. Maximum Vertical Load
32,000 lbs. Maximum Gross Trailer Weight

See Page 1-392

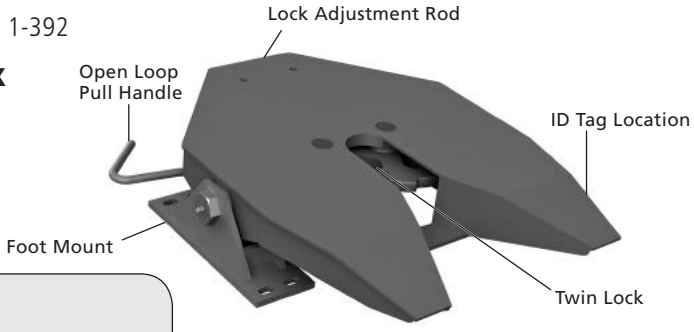

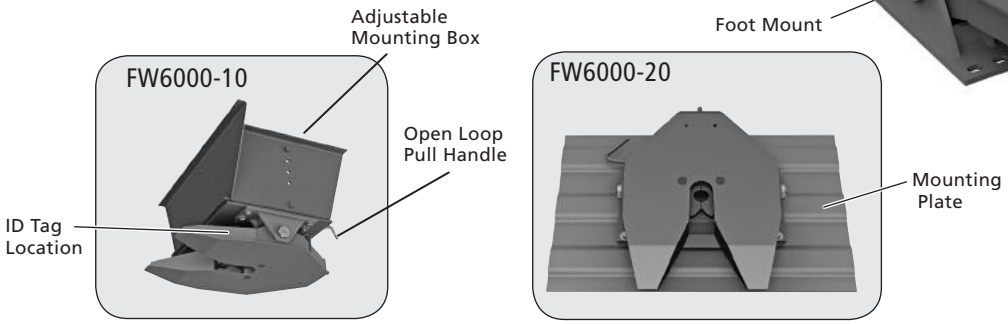

FW1226

40,000 lbs. Maximum Vertical Load
150,000 lbs. Maximum Drawbar Pull

See Page 1-402

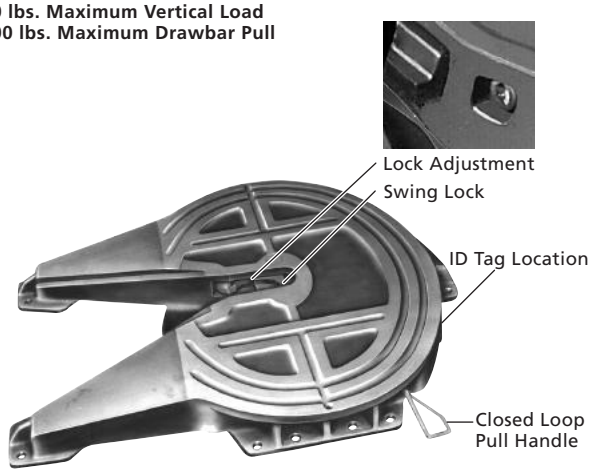

Simplex 400C

70,000 lbs. Maximum Vertical Load
200,000 lbs. Maximum Trailing Load

Discontinued - Replacement Parts Only

See Page 1-342

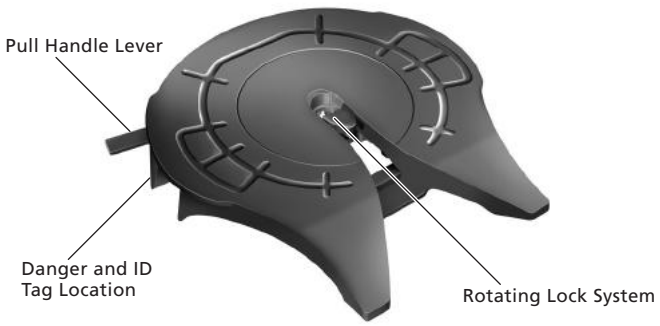

 Amendments and errors reserved. © SAF-HOLLAND, Inc.

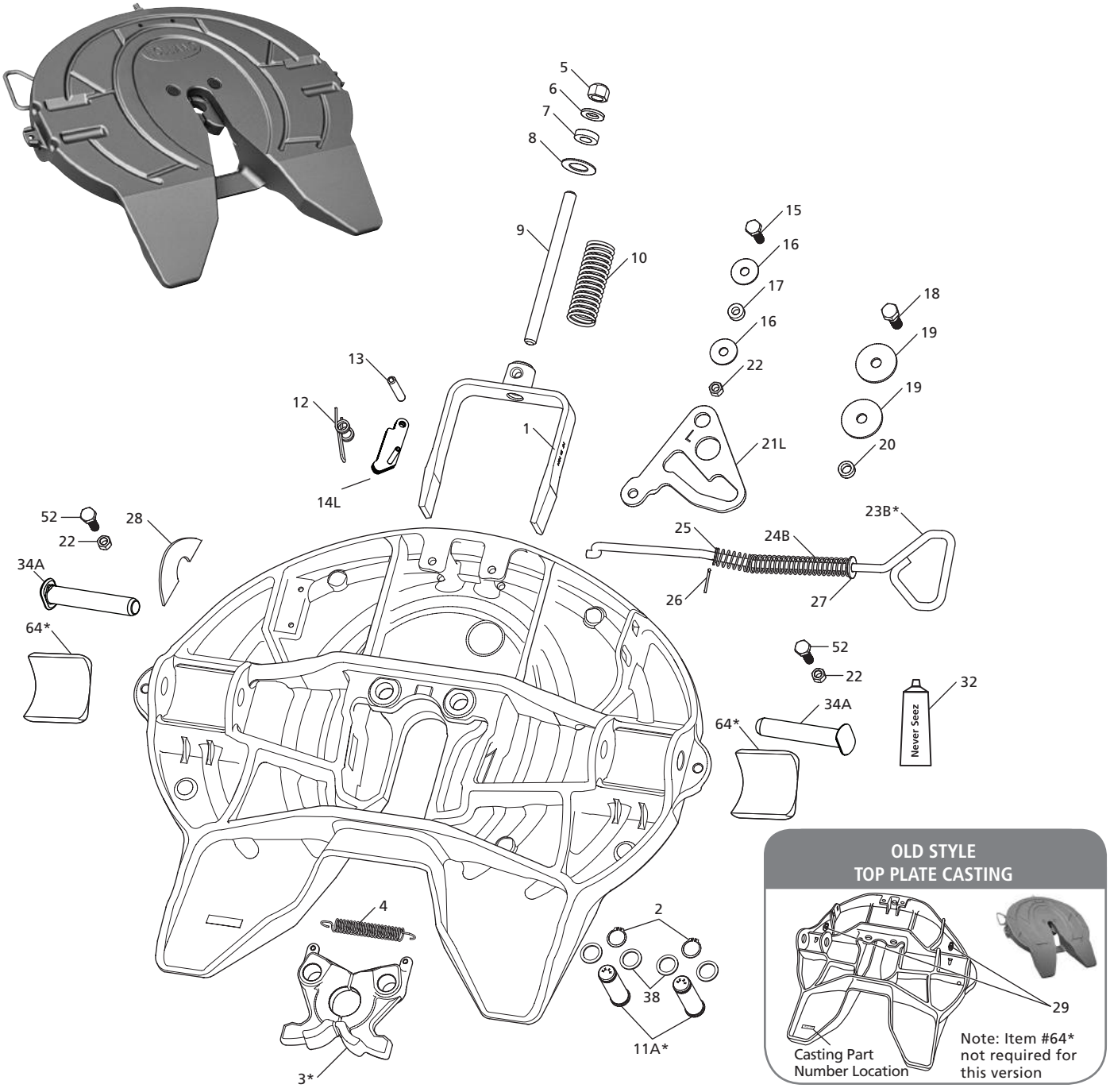

OLD STYLE TOP PLATE CASTING

FOR MODELS EQUIPPED WITH MANUAL SECONDARY LOCK

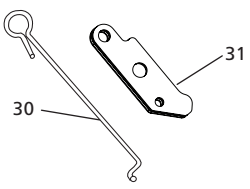

FOR RIGHT HAND RELEASE

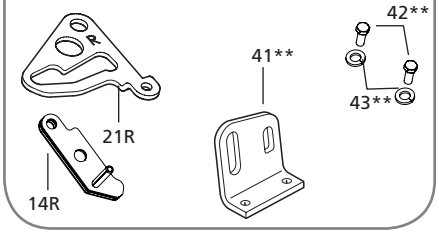

FOR AIR RELEASE MODELS

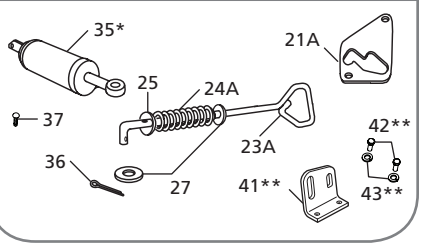

XL-FW10081PM-en-US Rev D 2016-03-01 Amendments and errors reserved. © SAF-HOLLAND, Inc.

FW35 PARTS LIST

ITEM	DESCRIPTION	PART NUMBER	QTY.	WEIGHT LBS [KG]
1	Yoke	XA-07295-P	1	5.82 [2.64]
2	Retaining Ring, 1" Dia.	XB-07398	2	0.01 [0.005]
3*	Lock Jaw Set, See RK-351-07296 or RK-351-07296-82	XA-07296-P	1	7.76 [3.52]
4	Spring, Extension	XB-07628	1	0.08 [0.04]
5	Lock Nut, .75"-16 GR C	XB-HNH-34-F	1	0.14 [0.06]
6	Washer, .81" I.D. x 1.47" O.D.	XB-PW-1316-112-P	1	0.05 [0.02]
7	Washer, Rubber, .75" I.D. x 1.50" O.D.	XB-1127	1	0.03 [0.01]
8	Tag, Lock Adjustment	XB-02312	1	0.01 [0.005]
9	Shaft, Yoke	XA-1706	1	1.28 [0.58]
10	Spring, Compression	XB-1505	1	0.61 [0.28]
11A*	Pin, Lock, See RK-07292-1	XA-07292-1	2	1.08 [0.49]
12	Spring, Torsion	XB-2149	1	0.06 [0.03]
13	Pin, Spring, .50" Dia. x 2.75" Long	XB-21-S-500-2750-P	1	N/A
14L	Lock, Secondary, Left-Hand and Air	XA-11992-L	1	0.67 [0.30]
14R	Lock, Secondary, Right-Hand	XA-11992-R	1	0.67 [0.30]
15	HHCS, .50"-20 x 1.75" GR 5	XB-2083	1	0.13 [0.06]
16	Washer, .56" I.D. x 1.75" O.D.	XB-08559	2	0.06 [0.03]
17	Roller, .52" I.D. x 1" O.D. x .38" Long	XA-1029	1	0.06 [0.03]
18	HHCS, .63"-18 x 1.75" GR 8	XB-CX-58-F-134	1	0.21 [0.10]
19	Washer, .66" I.D. x 2.63" O.D.	XB-07431	2	0.24 [0.11]
20	Roller, .66" I.D. x 1" O.D. x .38" Long	XA-1507	1	0.05 [0.02]
21A	Cam Plate, Air Release	XA-1705-P	1	1.74 [0.79]
21L	Cam Plate, Left-Hand	XA-07150-L-P	1	1.93 [0.88]
21R	Cam Plate, Right-Hand	XA-07150-R-P	1	1.93 [0.88]
22	Lock Nut, .50"-20 GR C	XB-T-69-A	3	0.04 [0.02]
23A*	Release Handle, Air Release, See RK-07766-1	XA-07766-1	1	1.90 [0.86]
23B*	Release Handle, Left- and Right-Hand, See RK-07151-1	XA-07151-1	1	2.05 [0.93]
24A	Spring, Air Release	XB-07974	1	0.16 [0.07]
24B	Spring, Manual Release	XB-07291	1	0.20 [0.09]
25	Washer, .53" I.D. x 1.06" O.D.	XB-PW-016-17	1	0.02 [0.01]
26	Pin, Cotter, .13" Dia. x 1.25" Long	XB-07508	1	0.02 [0.01]
27	Washer, .56" I.D. x 1.38" O.D. Manual Release	XB-T-49	1	0.04 [0.02]
	Washer, .56" I.D. x 1.38" O.D. Air Release		2	0.04 [0.02]
28	Tag, Operation (Service Part Only)	XB-07610	1	0.01 [0.01]
29	Fittings, Grease	XB-H-38	2	0.01 [0.005]
30	Release Handle, Manual Secondary Lock	XA-3542-M	1	0.25 [0.11]
31	Lock, Manual Secondary	XA-11292	1	0.61 [0.28]
32	Never-Seez, 7.5g Tube	XB-02967	1	0.02 [0.01]
34A	Pin, Bracket	XE-06356-P	2	1.98 [0.90]
35*	Cylinder Assembly, Air, See RK-2524-R-16-L	XA-2524-R-16-L	1	4.70 [2.13]
36	Pin, Cotter, .19" Dia. x 1.25" Long	XB-06336	1	0.01 [0.005]
37	Screw, Drive, #12 x .75" Long	XB-09155	1	0.01 [0.005]

FW35 PARTS LIST

ITEM	DESCRIPTION	PART NUMBER	QTY.	WEIGHT LBS [KG]
38	Washer, 1.19" I.D. x 1.58" O.D.	XB-05859-1	4	0.01 [0.005]
41**	Handle Bracket, Air Release and Right-Hand Release, for H-Version Casting	XA-11211	1	1.25 [0.57]
42**	HHCS, .38"-16 x 1" GR 5	XB-C-38-C-1	2	0.04 [0.02]
43**	Washer, Lock, .38" I.D. x .68" O.D.	XB-T-61	2	0.01 [0.00]
52	HHCS, .50"-20 x 1.25" GR 5	XB-C-95	2	0.11 [0.05]
64*	Pocket Insert, See RK-PKT-2	XD-08908	2	1.72 [0.78]

*Not sold individually - must be purchased in kit.
**Only needed for XA-351-H Version casting.

NOTE: See Accessories Section for Air Release, Electronic Lock Indicator, and No-Tilt Kits.

REPLACEMENT TOP PLATE PART NUMBERS

PART NUMBER	DESCRIPTION
XA-351-A-P	Right-Hand Release with Pins
XA-351-A-L-P	Left-Hand Release with Pins
XA-351-A-86-L-P	Air Release with Pins and Air Controls
XA-351-A-06-L-P	No-Tilt Left-Hand Release with Pins
XA-351-A-02-P	Manual Secondary Lock Right-Hand Release with Pins
XA-351-A-02-L-P	Manual Secondary Lock Left-Hand Release with Pins
XA-351-A-14-P	Right-Hand Release with Grease Fittings and Pins
XA-351-A-14-L-P	Left-Hand Release with Grease Fittings and Pins
XA-351-A-28-L-P	Left-Hand Converter Dolly Release with Pins
XA-351-A-L-ELP	Left-Hand Release with ELI and Pins

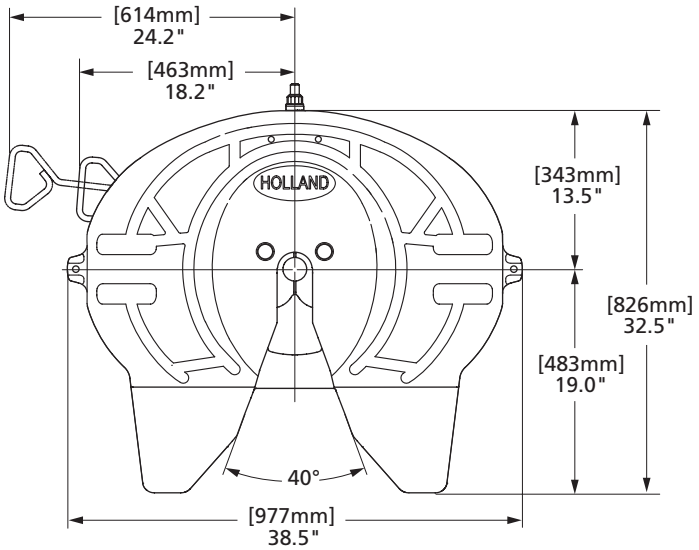

For XA-351 fifth wheel rebuild procedures, see Holland publication XL-FW290 at www.safholland.us

 Amendments and errors reserved. © SAF-HOLLAND, Inc.

RK-351-07295
Lock Yoke

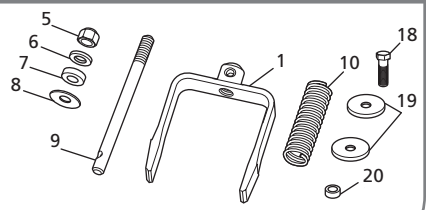

RK-351-02312
Lock Adjustment Tag

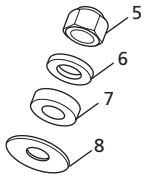

RK-351-1507
Cam Plate Roller Bolt Hardware

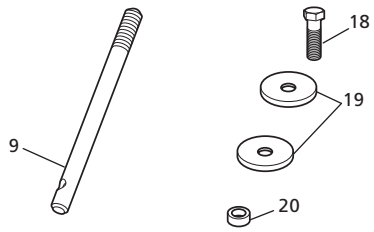

RK-351-2083
Cam Plate Pivot Bolt Hardware

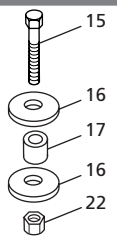

RK-351-07296
Standard Lock

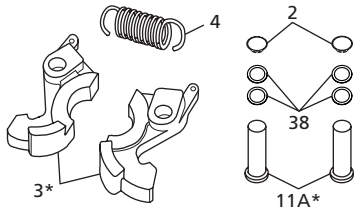

RK-351-07296-82
Lock with Grease Fittings

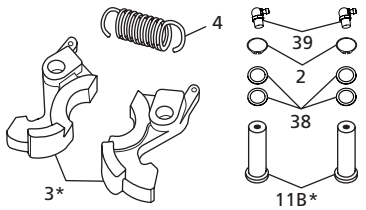

RK-07292-1
Lock Pins

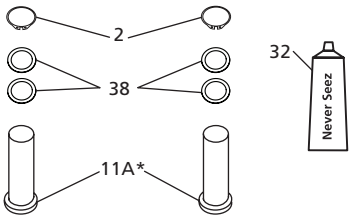

RK-07292-82
Lock Pins with Grease Fittings

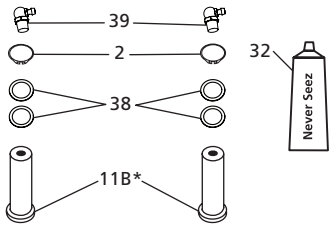

RK-2524-R16-L
Air Cylinder

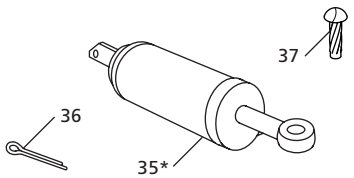

FW35 KIT PARTS LIST

ITEM	DESCRIPTION	PART NUMBER	QTY.	WEIGHT LBS [KG]
1	Yoke	XA-07295	1	5.82 [2.64]
2	Retaining Ring, 1" Dia.	XB-07398	2	0.01 [0.005]
3*	Lock Jaw Set, See RK-351-07296 and RK-351-07296-82	XA-07296	1	7.70 [3.49]
4	Spring, Extension	XB-07628	1	0.08 [0.04]
5	Lock Nut, .75"-16 GR C	XB-HNH-34-F	1	0.14 [0.06]
6	Washer, .81" I.D. x 1.47" O.D.	XB-PW-1316-112	1	0.04 [0.02]
7	Washer, Rubber 1.50" O.D. x .75" I.D.	XB-1127	1	0.03 [0.01]
8	Tag, Lock Adjustment	XB-02312	1	0.01 [0.005]
9	Yoke Shaft	XA-1706	1	1.28 [0.58]
10	Spring, Compression	XB-1505	1	0.61 [0.28]
11A*	Pin, Lock, Standard, See RK-07292-1	XA-07292-1	2	1.08 [0.49]
11B*	Pin, Lock, with Grease Fittings, See RK-07292-82	XA-07292-82	2	1.05 [0.48]
15	HHCS, .50"-20 x 1.75" GR 5	XB-2083	1	0.13 [0.06]
16	Washer, .56" I.D. x 1.75" O.D.	XB-08559	2	0.06 [0.03]

FW35 KIT PARTS LIST

ITEM	DESCRIPTION	PART NUMBER	QTY.	WEIGHT LBS [KG]
17	Roller, .52" I.D. x 1" O.D. x .38" Long	XA-1029	1	0.06 [0.03]
18	HHCS, .63"-18 x 1.75" GR 8	XB-CX-58-F-134	1	0.21 [0.10]
19	Washer, .66" I.D. x 2.63" O.D.	XB-07431	2	0.24 [0.11]
20	Roller, .66" I.D. x 1" O.D. x .38" Long	XA-1507	1	0.05 [0.02]
22	Lock Nut, .50"-20 GR C	XB-T-69-A	1	0.04 [0.02]
32	Never-Seez, 7.5g Tube	XB-02967	1	0.02 [0.01]
35*	Cylinder Assembly, Air , See RK-2524-R-16-L	XA-2524-R-16-L	1	4.70 [2.13]
36	Pin, Cotter, .19" Dia. x 1.25" Long	XB-06336	1	0.01 [0.005]
37	Screw, Drive, #12 x .75" Long	XB-09155	1	0.01 [0.005]
38	Washer, 1.19" I.D. x 1.58" O.D.	XB-05859-1	4	0.01 [0.005]
39	Fittings, Grease, 90°	XB-H-38-A	2	0.03 [0.01]

*Not sold individually - must be purchased in kit.

XL-FW10081PM-en-US Rev D 2016-03-01 Amendments and errors reserved. © SAF-HOLLAND, Inc.

RK-06973-1
Bracket Pins and Cushions - Standard

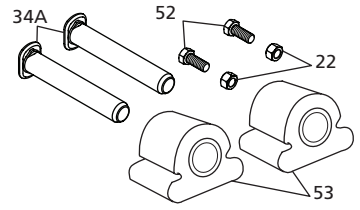

RK-PKT-2
Pocket Inserts

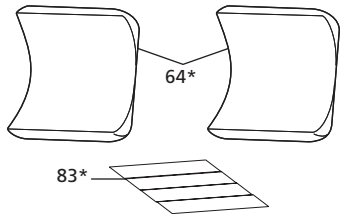

RK-10605
Bracket Pins and Bushings for ILS

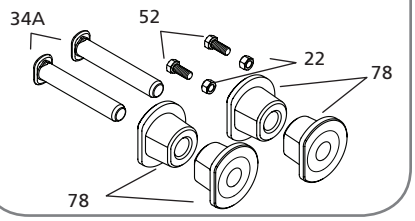

RK-11736
Bracket Pins and Cushions, Top Plate without Ears for ILS

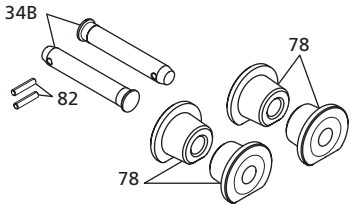

RK-07766-1
Release Handle, Air Release

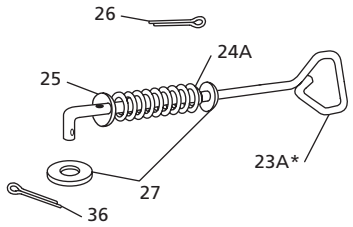

RK-07151-1
Release Handle, Left-and Right-Hand

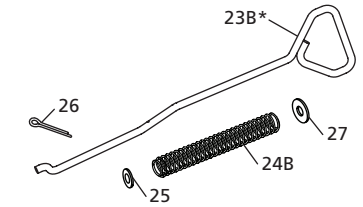

RK-08415-1
Release Handle Retrofit, Drop Release

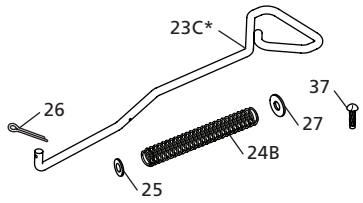

RK-351-09967
Release Handle, Convertor Dolly

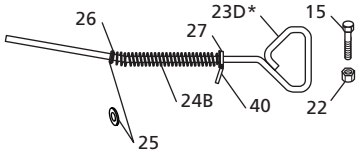

FW35 KIT PARTS LIST

ITEM	DESCRIPTION	PART NUMBER	QTY.	WEIGHT LBS [KG]
15	HHCS, .50"-20 x 1.75" GR5	XB-2083	1	0.13 [0.06]
22	Lock Nut, .50"-20 GRC, Brackets	XB-T-69-A	2	0.04 [0.02]
	Lock Nut, .50"-20 GRC, Handle		1	0.04 [0.02]
23A*	Release Handle, Air Release, See RK-07766-1	XA-07766-1	1	1.90 [0.86]
23B*	Release Handle for both Left and Right, See RK-07151-1	XA-07151-1	1	2.05 [0.93]
23C*	Release Handle, See RK-08145-1	XA-08415-1	1	2.00 [0.91]
23D*	Release Handle, Dolly, See RK-351-09967	XA-09962	1	2.12 [0.96]
24A	Spring, Air Release	XB-07974	1	0.16 [0.07]
24B	Spring, Manual Release	XB-07291	1	0.20 [0.09]
25	Washer, .53" I.D. x 1.06" O.D.	XB-PW-1732-1-116	1	0.02 [0.01]
26	Cotter Pin, .13" x 1.25" Long	XB-07508	1	0.02 [0.01]
27	Washer, .56" I.D. x 1.38" O.D., Air Handle	XB-T-49	2	0.04 [0.02]
	Washer, .56" I.D. x 1.38" O.D., Other Handle		1	0.04 [0.02]

FW35 KIT PARTS LIST

ITEM	DESCRIPTION	PART NUMBER	QTY.	WEIGHT LBS [KG]
34A	Pin, Bracket	XE-06356-P	2	1.98 [0.90]
34B	Pin, Bracket	XA-2016	2	2.00 [0.91]
36	Pin, Cotte,r .19" x 1.25" Long	XB-06336	1	0.01 [0.005]
40	Plate, Release Handle Dolly, See RK-351-09967	XA-09963	1	0.45 [0.20]
52	HHCS, .50"-20 x 1.25" GR5	XB-C-95	2	0.11 [0.05]
53	Cushion, Rubber	XB-0011-2	2	0.60 [0.27]
64*	Pocket Insert	XD-08908	2	1.72 [0.78]
78	Cushions, Rubber	XB-10605	4	0.39 [0.18]
82	Pin, Spring, .38" Dia. x 1.75" Long	XB-21-S-375-1750Z	2	0.02 [0.01]
83*	Double Face Tape	XB-09422	4	0.01 [0.005]

*Not sold individually - must be purchased in kit.

 Amendments and errors reserved. © SAF-HOLLAND, Inc.

SAF-HOLLAND Group

RK-09649 (Stainless Steel Air Cylinder)
RK-09649-1 (Aluminum Air Cylinder)
Air Release, Retrofit

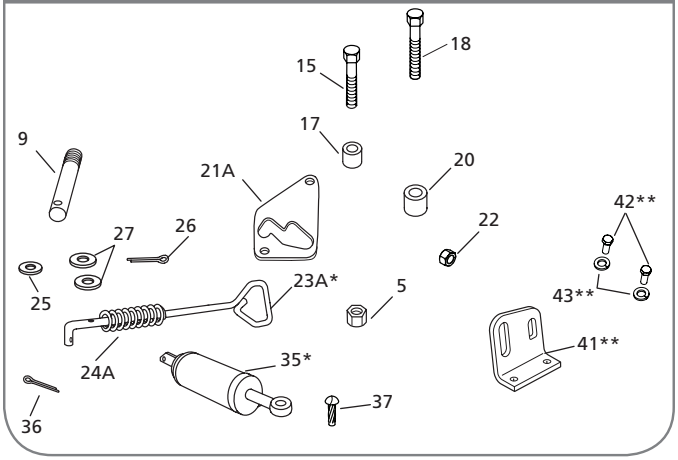

FW35 KIT PARTS LIST

ITEM	DESCRIPTION	PART NUMBER	QTY.	WEIGHT LBS [KG]
5	Lock Nut, .75"-16 GR C	XB-HNH-34-F	1	0.14 [0.06]
9	Yoke Shaft	XA-1706	1	1.28 [0.58]
15	HHCS, .50"-20 x 1.75" GR 5	XB-2083	1	0.13 [0.06]
17	Roller, .52" I.D. x 1" O.D. x .38" Long	XA-1029	1	0.06 [0.03]
18	HHCS, .63"-18 x 1.75" GR 8	XB-CX-58-F-134	1	0.21 [0.10]
20	Roller, .66" I.D. x 1" O.D. x .38" Long	XA-1507	1	0.05 [0.02]
21A	Cam Plate, Air Release	XA-1705-P	1	1.74 [0.79]
22	Lock Nut, .50"-20 GR C	XB-T-69-A	1	0.04 [0.02]
23A*	Release Handle, Air Release, See RK-07766-1	XA-07766-1-P	1	1.90 [0.86]
24A	Spring, Air Release	XB-07974-P	1	0.16 [0.07]
25	Washer, .53" I.D. x 1.06" O.D.	XB-PW-016-17	1	0.02 [0.01]
26	Pin, Cotter, .13" x 1.25" Long	XB-07508	1	0.02 [0.01]
27	Washer, .56" I.D. x 1.38" O.D.	XB-T-49-P	2	0.04 [0.02]
35*	Air Release Cylinder Assembly, See RK-2524-R-16-L	XA-2524-R-16-L	1	4.70 [2.13]
	Cylinder, Air RK-09649-1	XA-11713	1	4.00 [1.81]

RK-07814
Air Release

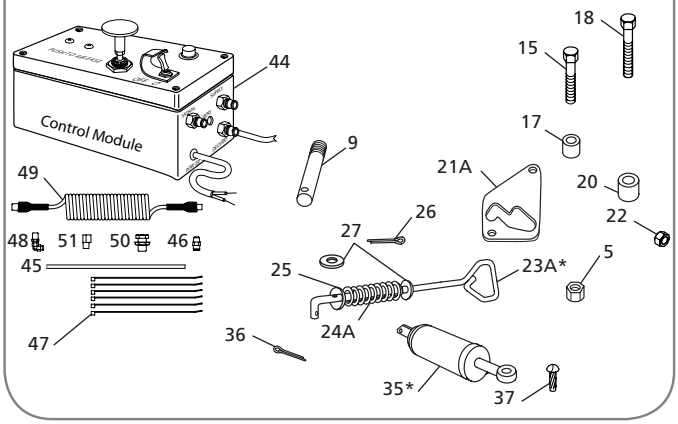

FW35 KIT PARTS LIST

ITEM	DESCRIPTION	PART NUMBER	QTY.	WEIGHT LBS [KG]
36	Pin, Cotter, .19" x 1.25" Long	XB-06336	1	0.01 [0.005]
37	Screw, Drive, #12 x .75" Long	XB-09155	1	0.01 [0.005]
41**	Handle Bracket, Air Release and Right-Hand Release for H- Version Casting	XA-11211	1	1.25 [0.57]
42**	HHCS, .38" - 16 x 1" GR 5	XB-C-38-C-1	2	0.04 [0.02]
43**	Washer, Lock, .38 I.D. x .68" O.D.	XB-T-61	2	0.01 [0.005]
44	Control Module, Air Release	XA-06354	1	2.80 [1.27]
45	Tubing, .25" O.D. x 35', Nylon	XA-06565-35	1	0.56 [0.25]
46	Pipe Fitting, Male	XB-11251	1	0.03 [0.01]
47	Cable Ties, Nylon, See poRK-06535	XB-01961	6	N/A
48	Elbow, 90° Street, See RK-06535	XB-01996	1	0.09 [0.04]
49	Air Hose Assembly	XB-06583	1	N/A
50	Bulkhead Fitting, .25" NPT Female	XB-01959	1	0.18 [0.08]
51	Elbow, Male, Swivel, 90°	XB-06570	1	N/A

*Not sold individually - must be purchased in kit.
**Only needed for FW35 (XA-351-H) Version casting

XL-FW10081PM-en-US Rev D 2016-03-01 Amendments and errors reserved. © SAF-HOLLAND, Inc.

RK-351-A
Complete Rebuild, Right-Hand Release

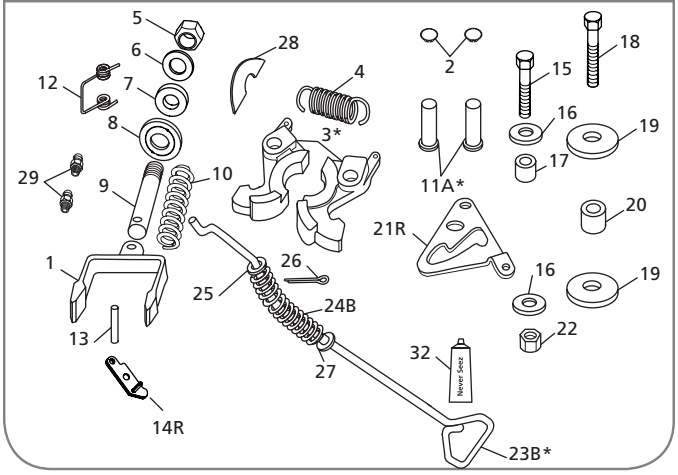

RK-351-A-L
Complete Rebuild, Left-Hand Release

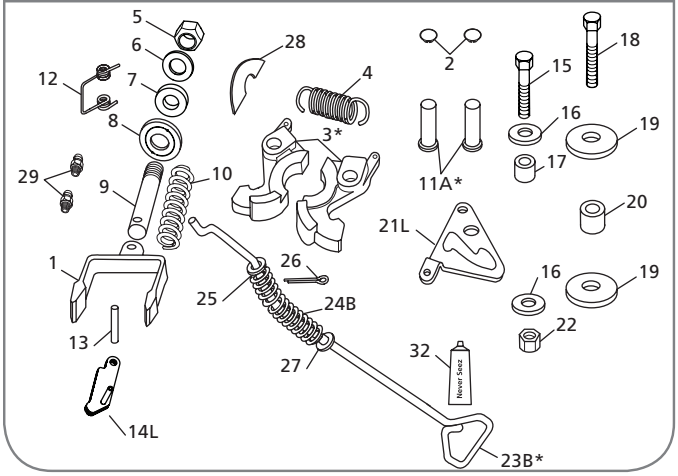

FW35 KIT PARTS LIST

ITEM	DESCRIPTION	PART NUMBER	QTY.	WEIGHT LBS [KG]
1	Yoke	XA-07295	1	5.82 [2.64]
2	Retaining Ring, 1" Dia.	XB-07398	2	0.01 [0.005]
3*	Lock Jaw Set, See RK-351-07296 and RK-351-07296-82	XA-07296	1	7.70 [3.49]
4	Spring, Extension	XB-07628	1	0.08 [0.04]
5	Lock Nut, .75"-16 GR C	XB-HNH-34-F	1	0.14 [0.06]
6	Washer, .81" I.D. x 1.47" O.D.	XB-PW-1316-112	1	0.04 [0.02]
7	Washer, Rubber, 1.50" O.D. x .75" I.D.	XB-1127	1	0.03 [0.01]
8	Tag, Lock Adjustment	XB-02312	1	0.01 [0.005]
9	Yoke Shaft	XA-1706	1	1.28 [0.58]
10	Spring, Compression	XB-1505	1	0.61 [0.28]
11A*	Pin, Lock, Standard, See RK-07292-1	XA-07292-1	2	1.08 [0.49]
12	Spring, Torsion	XB-2149	1	0.06 [0.03]
13	Pin, Spring, .50" Dia. x 2.75" Long	XB-21-S-500-2750	1	0.02 [0.01]
14L	Lock, Secondary, Left-Hand	XA-11992-L	1	0.67 [0.30]
14R	Lock, Secondary, Right-Hand	XA-11992-R	1	0.67 [0.30]
15	HHCS, .50"-20 x 1.75" GR 5	XB-2083	1	0.13 [0.06]

FW35 KIT PARTS LIST

ITEM	DESCRIPTION	PART NUMBER	QTY.	WEIGHT LBS [KG]
16	Washer, .56" I.D. x 1.75" O.D.	XB-08559	2	0.06 [0.03]
17	Roller, .52" I.D. x 1" O.D. x .38" Long	XA-1029	1	0.06 [0.03]
18	HHCS, .63"-18 x 1.75" GR 8	XB-CX-58-F-134	1	0.21 [0.10]
19	Washer, .66" I.D. x 2.63" O.D.	XB-07431	2	0.24 [0.11]
20	Roller, .66" I.D. x 1" O.D. x .38" Long	XA-1507	1	0.05 [0.02]
21L	Cam Plate, Left-Hand	XA-07150-L	1	1.93 [0.88]
21R	Cam Plate, Right-Hand	XA-07150-R	1	1.93 [0.88]
22	Lock Nut, .50"-20 GR C	XB-T-69-A	1	0.04 [0.02]
23B*	Release Handle for both Left- and Right-Hand, See RK-07151-1	XA-07151-1	1	2.05 [0.93]
24B	Spring, Manual Release	XB-07291	1	0.20 [0.09]
25	Washer, .53" I.D. x 1.06" O.D.	XB-PW-1732-1-116	1	0.02 [0.01]
26	Pin, Cotter, .13" x 1.25" Long	XB-07508	1	0.02 [0.01]
27	Washer, .56" I.D. x 1.38" O.D.	XB-T-49	1	0.04 [0.02]
28	Tag, Operation (Service Part Only)	XB-07610	1	0.01 [0.005]
29	Grease Zerk	XB-H-38	2	0.01 [0.005]
32	Never-Seez, 7.5g Tube	XB-02967	1	0.02 [0.01]

*Not sold individually - must be purchased in kit.

 Amendments and errors reserved. © SAF-HOLLAND, Inc.

RK-351-A-02
Complete Rebuild, Secondary Lock, Right-Hand Release

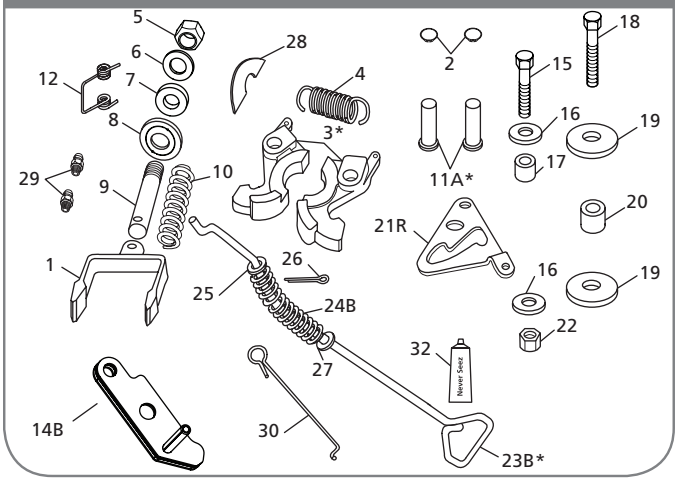

RK-351-A-02-L
Complete Rebuild, Secondary Lock, Left-Hand Release

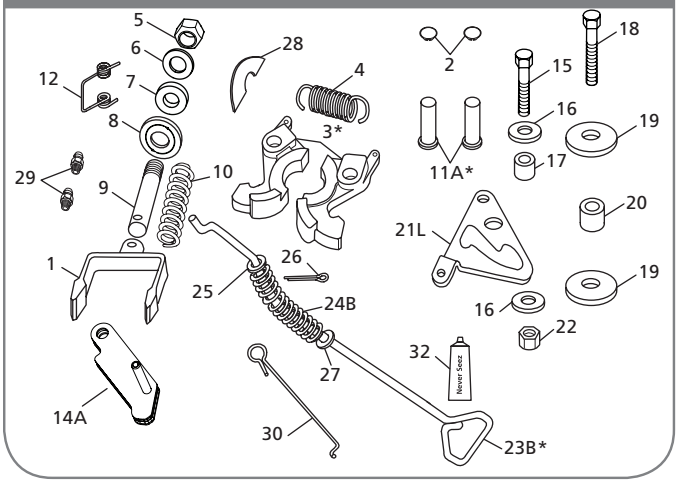

FW35 KIT PARTS LIST

ITEM	DESCRIPTION	PART NUMBER	QTY.	WEIGHT LBS [KG]
1	Yoke	XA-07295-P	1	5.82 [2.64]
2	Retaining Ring, 1"Dia.	XB-07398	2	0.01 [0.005]
3*	Lock Jaw Set, See RK-351-07296 and RK-351-07296-82	XA-07296-P	1	7.76 [3.52]
4	Spring, Extension	XB-07628	1	0.08 [0.04]
5	Lock Nut, .75"-16 GR C	XB-HNH-34-F	1	0.14 [0.06]
6	Washer, .81" I.D. x 1.47" O.D.	XB-PW-1316-112-P	1	0.05 [0.02]
7	Washer, Rubber, 1.50" O.D. x .75" I.D.	XB-1127	1	0.03 [0.01]
8	Tag, Lock Adjustment	XB-02312	1	N/A
9	Yoke Shaft	XA-1706	1	1.28 [0.58]
10	Spring, Compression	XB-1505	1	0.61 [0.28]
11A*	Pin, Lock, Standard, See RK-07292-1	XA-07292-1	2	1.08 [0.49]
12	Spring, Torsion	XB-2149	1	0.06 [0.03]
31A	Lock, S/A Secondary	XA-11992-L	1	0.67 [0.30]
31B	Lock, S/A Secondary	XA-11992-R	1	0.67 [0.30]
15	HHCS, .50"-20 x 1.75" GR 5	XB-2083	1	0.13 [0.06]
16	Washer, .56" I.D. x 1.75" O.D.	XB-08559-P	2	0.07 [0.03]

FW35 KIT PARTS LIST

ITEM	DESCRIPTION	PART NUMBER	QTY.	WEIGHT LBS [KG]
17	Roller, .52" I.D. x 1" O.D. x .38" Long	XA-1029	1	0.06 [0.03]
18	HHCS, .63"-18 x 1.75" GR 8	XB-CX-58-F-134	1	0.21 [0.10]
19	Washer, .66" I.D. x 2.63" O.D.	XB-07431	2	0.24 [0.11]
20	Roller, .66" I.D. x 1" O.D. x .38" Long	XA-1507	1	0.05 [0.02]
21L	Cam Plate, Left-Hand	XA-07150-L-P	1	1.93 [0.88]
21R	Cam Plate, Right-Hand	XA-07150-R-P	1	1.93 [0.88]
22	Lock Nut, .50"-20 GR C	XB-T-69-A	2	0.04 [0.02]
23B*	Release Handle for both Left- and Right-Hand, See RK-07151-1	XA-07151-1	1	2.05 [0.93]
24B	Spring, Manual Release	XB-07291	1	0.20 [0.09]
25	Washer, .53" I.D. x 1.06" O.D.	XB-PW-016-17	1	0.02 [0.01]
26	Pin, Cotter, .13" x 1.25" Long	XB-07508	1	0.02 [0.01]
27	Washer, .56" I.D. x 1.38" O.D.	XB-T-49	1	0.04 [0.02]
28	Tag, Operation (Service Part Only)	XB-07610	1	N/A
29	Grease Zerk	XB-H-38	2	N/A
30	Release Handle, Manual Secondary Lock	XA-3542-M-P	1	0.25 [0.11]
32	Never-Seez, 7.5g Tube	XB-02967	1	N/A

*Not sold individually - must be purchased in kit.

 Amendments and errors reserved. © SAF-HOLLAND, Inc.

RK-351-A-80-L
Complete Rebuild, Air Release

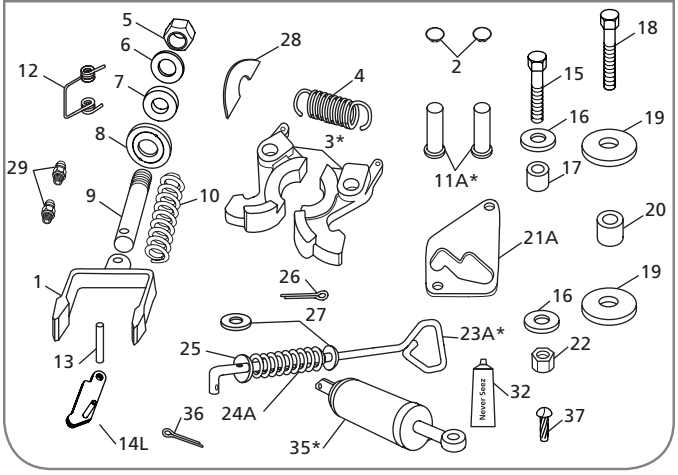

RK-351-A-1A-L
Complete Rebuild, Secondary Lock with Air Release

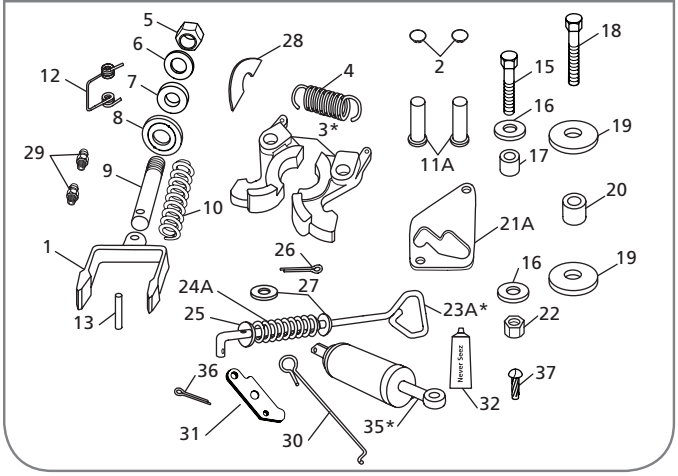

FW35 KIT PARTS LIST

ITEM	DESCRIPTION	PART NUMBER	QTY.	WEIGHT LBS [KG]
1	Yoke	XA-07295	1	5.82 [2.64]
2	Retaining Ring, 1" Dia.	XB-07398	2	0.01 [0.005]
3*	Lock Jaw Set, See RK-351-07296 and RK-351-07296-82	XA-07296	1	7.70 [3.49]
4	Spring, Extension	XB-07628	1	0.08 [0.04]
5	Lock Nut, .75"-16 GR C	XB-HNH-34-F	1	0.14 [0.06]
6	Washer, .81" I.D. x 1.47" O.D.	XB-PW-1316-112	1	0.04 [0.02]
7	Washer, Rubber, 1.50" O.D. x .75" I.D.	XB-1127	1	0.03 [0.01]
8	Tag, Lock Adjustment	XB-02312	1	0.01 [0.005]
9	Yoke Shaft	XA-1706	1	1.28 [0.58]
10	Spring, Compression	XB-1505	1	0.61 [0.28]
11A*	Pin, Lock, Standard, See RK-07292-1	XA-07292-1	2	1.08 [0.49]
12	Spring, Torsion	XB-2149	1	0.06 [0.03]
13	Pin, Spring, .50" Dia. x 2.75" Long	XB-21-S-500-2750	1	0.02 [0.01]
14L	Lock, Secondary, Left-Hand	XA-11992-L	1	0.67 [0.30]
15	HHCS, .50"-20 x 1.75" GR 5	XB-2083	1	0.13 [0.06]
16	Washer, .56" I.D. x 1.75" O.D.	XB-08559	2	0.06 [0.03]
17	Roller, .52" I.D. x 1" O.D. x .38" Long	XA-1029	1	0.06 [0.03]
18	HHCS, .63"-18 x 1.75" Long	XB-CX-58-F-134	1	0.21 [0.10]

FW35 KIT PARTS LIST

ITEM	DESCRIPTION	PART NUMBER	QTY.	WEIGHT LBS [KG]
19	Washer, .66" I.D. x 2.63" O.D.	XB-07431	2	0.24 [0.11]
20	Roller, .66" I.D. x 1" O.D. x .38" Long	XA-1507	1	0.05 [0.02]
21A	Cam Plate, Air Release	XA-1705	1	0.80 [0.36]
22	Lock Nut, .50"-20 GR C	XB-T-69-A	1	0.04 [0.02]
23A*	Release Handle, Air Release, See RK-07766-1	XA-07766-1	1	1.90 [0.86]
24A	Spring, Air Release	XB-07974	1	0.16 [0.07]
25	Washer, .53" I.D. x 1.06" O.D.	XB-PW-1732-1-116	1	0.02 [0.01]
26	Cotter Pin, .13" x 1.25" Long	XB-07508	1	0.02 [0.01]
27	Washer, .56" I.D. x 1.38" O.D.	XB-T-49	4	0.04 [0.02]
28	Tag, Operation (Service Part Only)	XB-07610	1	0.01 [0.01]
29	Grease Zerk	XB-H-38	2	0.01 [0.005]
30	Release Handle, Manual Secondary Lock	XA-3542-M-P	1	0.25 [0.11]
31	Lock, Manual Secondary	XA-11992	1	0.61 [0.28]
32	Never-Seez, 7.5g Tube	XB-02967	1	0.02 [0.01]
35*	Air Release Cylinder Assembly, See RK-2524-R-16-L	XA-2524-R-16-L	1	4.70 [2.13]
36	Pin, Cotter, .19" Dia. x 1.25" Long	XB-06336	1	0.01 [0.005]
37	Drive Screw, #12 x .75" Long	XB-09155	1	0.01 [0.005]

*Not sold individually - must be purchased in kit.

 Amendments and errors reserved. © SAF-HOLLAND, Inc.

SAF-HOLLAND Group

RK-351-A-14
Complete Rebuild, Right-Hand Release with Grease Fittings

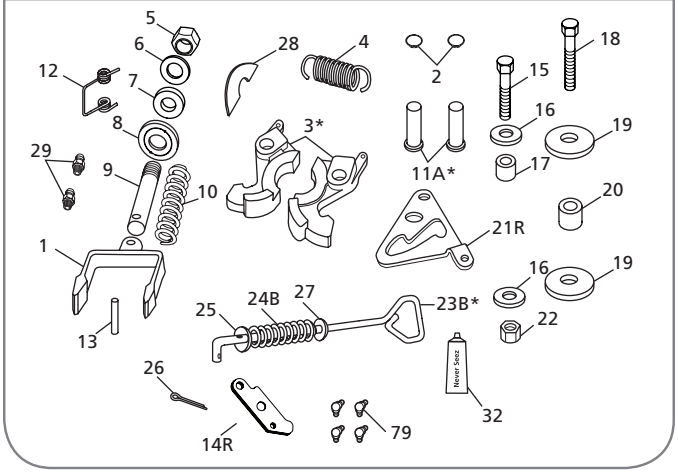

RK-351-A-14-L
Complete Rebuild, Left-Hand Release with Grease Fittings

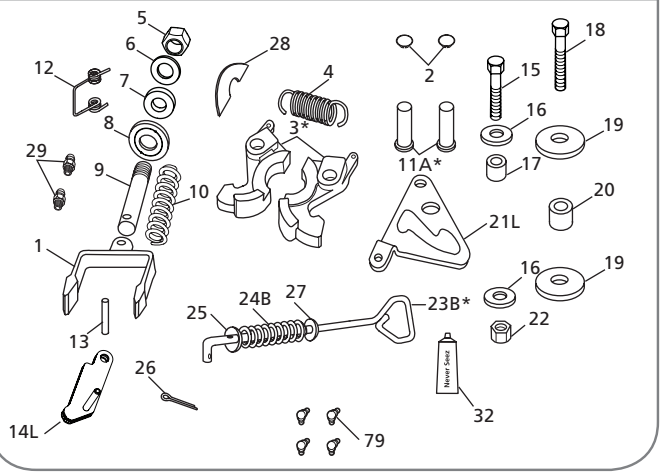

FW35 KIT PARTS LIST

ITEM	DESCRIPTION	PART NUMBER	QTY.	WEIGHT LBS [KG]
1	Yoke	XA-07295-P	1	5.82 [2.64]
2	Retaining Ring, 1" Dia.	XB-07398	2	0.01 [0.005]
3*	Lock Jaw Set, See RK-351-07296 and RK-351-07296-82	XA-07296-P	1	7.76 [3.52]
4	Spring, Extension	XB-07628	1	0.08 [0.04]
5	Lock Nut, .75"-16 GR C	XB-HNH-34-F	1	0.14 [0.06]
6	Washer, .81" I.D. x 1.47" O.D.	XB-PW-1316-112-P	1	0.05 [0.02]
7	Washer, Rubber, 1.50" O.D. x .75" I.D.	XB-1127	1	0.03 [0.01]
8	Tag, Lock Adjustment	XB-02312	1	N/A
9	Yoke Shaft	XA-1706	1	1.28 [0.58]
10	Spring, Compression	XB-1505	1	0.61 [0.28]
11A*	Pin, Lock, Standard, See RK-07292-1	XA-07292-1	2	1.08 [0.49]
12	Spring, Torsion	XB-2149	1	0.06 [0.03]
13	Pin, Spring, .50" Dia. x 2.75" Long	XB-21-S-500-2750-P	1	N/A
14L	Lock, Secondary, Left-Hand	XA-11992-L	1	0.67 [0.30]
14R	Lock, Secondary, Right-Hand	XA-11992-R	1	0.67 [0.30]
15	HHCS, .50"-20 x 1.75" GR 5	XB-2083	1	0.13 [0.06]
16	Washer, .56" I.D. x 1.75" O.D.	XB-08559-P	2	0.07 [0.03]

FW35 KIT PARTS LIST

ITEM	DESCRIPTION	PART NUMBER	QTY.	WEIGHT LBS [KG]
17	Roller, .52" I.D. x 1" O.D. x .38" Long	XA-1029	1	0.06 [0.03]
18	HHCS, .63"-18 x 1.75" GR 8	XB-CX-58-F-134	1	0.21 [0.10]
19	Washer, .66" I.D. x 2.63" O.D.	XB-07431	2	0.24 [0.11]
20	Roller, .66" I.D. x 1" O.D. x .38" Long	XA-1507	1	0.05 [0.02]
21L	Cam Plate, Left-Hand	XA-07150-L-P	1	1.93 [0.88]
21R	Cam Plate, Right-Hand	XA-07150-R-P	1	1.93 [0.88]
22	Lock Nut, .50"-20 GR C	XB-T-69-A	1	0.04 [0.02]
23B*	Release Handle for both Left- and Right-Hand, See RK-07151-1	XA-07151-1	1	2.05 [0.93]
24B	Spring, Manual Release	XB-07291	1	0.20 [0.09]
25	Washer, .53" I.D. x 1.06" O.D.	XB-PW-016-17	1	0.20 [0.09]
26	Pin, Cotter, .13" x 1.25" Long	XB-07508	1	0.02 [0.01]
27	Washer, .56" I.D. x 1.38" O.D.	XB-T-49	1	0.04 [0.02]
28	Tag, Operation (Service Part Only)	XB-07610	1	N/A
29	Grease Zerk	XB-H-38	2	N/A
32	Never-Seez, 7.5g Tube	XB-02967	1	N/A
79	Fittings, Grease, 45°	XB-H-38-C	4	0.02 [0.01]

*Not sold individually - must be purchased in kit.

XL-FW10081PM-en-US Rev D 2016-03-01 Amendments and errors reserved. © SAF-HOLLAND, Inc.

RK-351-A-28-L
Complete Rebuild, Convertor Dolly

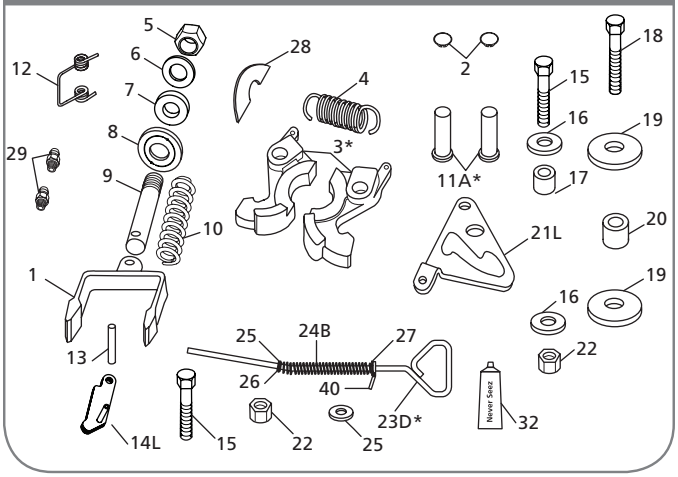

FW35 KIT PARTS LIST

ITEM	DESCRIPTION	PART NUMBER	QTY.	WEIGHT LBS [KG]
1	Yoke	XA-07295-P	1	5.82 [2.64]
2	Retaining Ring, 1" Dia.	XB-07398	2	0.01 [0.005]
3*	Lock Jaw Set, See RK-351-07296 and RK-351-07296-82	XA-07296-P	1	7.76 [3.52]
4	Spring, Extension	XB-07628	1	0.08 [0.04]
5	Lock Nut, .75"-16 GR C	XB-HNH-34-F	1	0.14 [0.06]
6	Washer, .81" I.D. x 1.47" O.D.	XB-PW-1316-112-P	1	0.05 [0.02]
7	Washer, Rubber, 1.50" O.D. x .75" I.D.	XB-1127	1	0.03 [0.01]
8	Tag, Lock Adjustment	XB-02312	1	N/A
9	Yoke Shaft	XA-1706	1	1.28 [0.58]
10	Spring, Compression	XB-1505	1	0.61 [0.28]
11A*	Lock Pin, Standard, See RK-07292-1	XA-07292-1	2	1.08 [0.49]
12	Spring, Torsion	XB-2149	1	0.06 [0.03]
13	Pin, Spring, .50" Dia. x 2.75" Long	XB-21-S-500-2750-P	1	N/A
14L	Lock, Secondary, Left-Hand	XA-11992-L	1	0.67 [0.30]
15	HHCS, .50"-20 x 1.75" GR 5	XB-2083	2	0.13 [0.06]
16	Washer, .56" I.D. x 1.75" O.D.	XB-08559	2	0.06 [0.03]

FW35 KIT PARTS LIST

ITEM	DESCRIPTION	PART NUMBER	QTY.	WEIGHT LBS [KG]
17	Roller, .52" I.D. x 1" O.D. x .38" Long	XA-1029	1	0.06 [0.03]
18	HHCS, .63"-18 x 1.75" GR 8	XB-CX-58-F-134	1	0.21 [0.10]
19	Washer, .66" I.D. x 2.63" O.D.	XB-07431	2	0.24 [0.11]
20	Roller, .66" I.D. x 1" O.D. x .38" Long	XA-1507	1	0.05 [0.02]
21L	Cam Plate, Left-Hand	XA-07150-L-P	1	1.93 [0.88]
22	Lock Nut, .50"-20 GR C	XB-T-69-A	2	0.04 [0.02]
23D*	Release Handle, Dolly, See Kit RK-351-09967	XA-09962	1	2.12 [0.96]
24B	Spring, Manual Release	XB-07291	1	0.20 [0.09]
25	Washer, .53" I.D. x 1.06" O.D.	XB-PW-016-17	2	0.02 [0.01]
26	Pin, Cotter, .13" x 1.25" Long	XB-07508	1	0.02 [0.01]
27	Washer, .56" I.D. x 1.38" O.D.	XB-T-49	1	0.04 [0.02]
28	Tag, Operation (Service Part Only)	XB-07610	1	N/A
29	Grease Zerk	XB-H-38	2	N/A
32	Never-Seez, 7.5g Tube	XB-02967	1	N/A
40	Release Handle Plate, Dolly, See RK-351-09967	XA-09963	1	0.45 [0.20]

*Not sold individually - must be purchased in kit..

 Amendments and errors reserved. © SAF-HOLLAND, Inc.

ILS Style Fifth Wheel Assembly Part Numbers

General Holland prefix indicating complete fifth wheel assembly

SERIES	
35	FW35 Series

MOUNTING STYLE	
NO.	DESCRIPTION
Standard Duty Sliders	
A	Outboard (1 pc tie-bar)
B	Inboard (Serrated 3 pc tie-bar)
C	Inboard (Straight 3 pc tie-bar) (DTNA Air Fitting)
F	Outboard (1 pc tie-bar)
H	Inboard (1 pc tie-bar for PACCAR)
J	Outboard (1 pc tie-bar for PACCAR)
Standard Duty Stationaries	
Z	Integrated Plate Mount
Y	Foot Mount
X	Bracket Castings Only (No Angle or Base Plate)
W	Brackets w/4" Vert. Leg Angle
Specialty Mounting Systems	
K	Kompensator
N	No-Tilt

HEIGHT (approx.)	
NO.	DESCRIPTION
6	6" (Stationary only)
7	7"
8	8"
9	9"
0	10"
1	11" (Komp only)
2	12.0" [305] (Komp only)
3	13" (Komp only)

FW 35 X X XX X X XX

TRAVEL	
NO.	DESCRIPTION
00	Stationary
ILS Travel	
12	12"
18	18" (Only H & J) Mounting Style
24	24"
36	36"
48	48"
No-Tilt ILS Travel	
06	6"
18	18"
30	30"
42	42"
Kompensator Travel	
11	11"
17	17"
24	24"
41	41"
54	54"
66	66"

ANGLES	
NO.	DESCRIPTION
No Angle Mounting Systems	
W	Aftermarket Inboard No-Tilt & Komp (Serrated Edge)
X	Outboard Slider ***or*** Inboard Slider w/o Angles ***or*** Stationary w/o Angles
Y	Outboard No-Tilt & Komp
Z	OEM Inboard No-Tilt & Komp (straight edge)
Frame Width for Standard Duty Mounting Angles	
A	33.25"
B	33.38"
C	33.50"
D	33.62"
E	33.75
F	33.88"
G	34.00"
H	34.12"
J	34.25"
K	34.38"
L	34.50"

RELEASE HANDLE	
NO.	DESCRIPTION
L	Left-hand (Road-side)
R	Right-hand (Curb-side)

OPTION CODE*	
NO.	DESCRIPTION
00	No option
02	Manual Secondary Lock
24	Drilled & Tapped for Auto Lube
28	Dolly Release Handle
80	Air Release Top Plate
EL	Electronic Lock Indicator (ELI)
EA	ELI w/ Air Release Top Plate
8E	ELI w/Air Release Top Plate (PACCAR only)

NOTE: There are no "dashes" used for the complete fifthwheel assembly new part number

* Please note that not all options are are available on every top plate. Multiple option combinations are available.

XL-FW10081PM-en-US Rev D 2016-03-01 Amendments and errors reserved. © SAF-HOLLAND, Inc.

Traditional Style Stationary Fifth Wheel Assembly Part Numbers

General Holland prefix indicating complete fifth wheel assembly

SERIES	
35	FW35 Series

FRAME WIDTH			
LETTER	WIDTH	LETTER	WIDTH
X	No Angle	F	33.88"
A	33.25"	G	34.00"
B	33.38"	H	34.12"
C	33.50"	J	34.25"
D	33.62"	K	34.38"
E	33.75"	L	34.50"

RELEASE HANDLE	
NO.	DESCRIPTION
L	Left-hand (Road-side)
R	Right-hand (Curb-side)

FW 35 XXXX X X X XX

MOUNTING STYLE			
NO.	HEIGHT	NO.	HEIGHT
Foot Mount		*Bracket with Angle*	
7801	8.7"	7811	8.7"
7802	7.7"	7812	7.7"
7803	6.7"	7813	6.7"
7804	5.7"	7814	5.7"
Integrated Plate		*Bracket for Angle*	
7883	8.6"	7821	8.3"
8774	7.6"	7822	7.3"
7885	6.6"	7823	6.3"
7886	5.6"	7824	5.3"

SLIDE TRAVEL	
NO.	DESCRIPTION
1	12.2"
2	18.4"
3	24.5"
4	36.7"
5	48.9"

OPTION CODE*	
NO.	DESCRIPTION
BLANK	No option
02	Manual Secondary Lock
24	Drilled & Tapped for Auto Lube
Other Options Available	

Traditional Style Sliding Fifth Wheel Assembly Part Numbers

General Holland prefix indicating complete fifth wheel assembly

SERIES	
35	FW35 Series

FRAME WIDTH			
LETTER	WIDTH	LETTER	WIDTH
X	No Angle	G	34.00"
A	33.25"	H	34.12"
B	33.38"	J	34.25"
C	33.50"	K	34.38"
D	33.62"	L	34.50"
E	33.75"	*Outboard*	
F	33.88"	T	Angles not Included

RELEASE HANDLE	
NO.	DESCRIPTION
L	Left-hand (Road-side)
R	Right-hand (Curb-side)

FW 35 XXXX X X X XX

MOUNTING STYLE			
NO.	HEIGHT	NO.	HEIGHT
Over the Frame		*Outboard*	
7001	8.63"	8001	8.63"
7002	7.63"	8002	7.63"
7003	6.63"	8003	6.63"

SLIDE TRAVEL	
NO.	DESCRIPTION
1	12.2"
2	18.4"
3	24.5"
4	36.7"
5	48.9"

OPTION CODE*	
NO.	DESCRIPTION
BLANK	No option
02	Manual Secondary Lock
24	Drilled & Tapped for Auto Lube
Other Options Available	

 Amendments and errors reserved. © SAF-HOLLAND, Inc.

FW35 Stationary Foot Mount



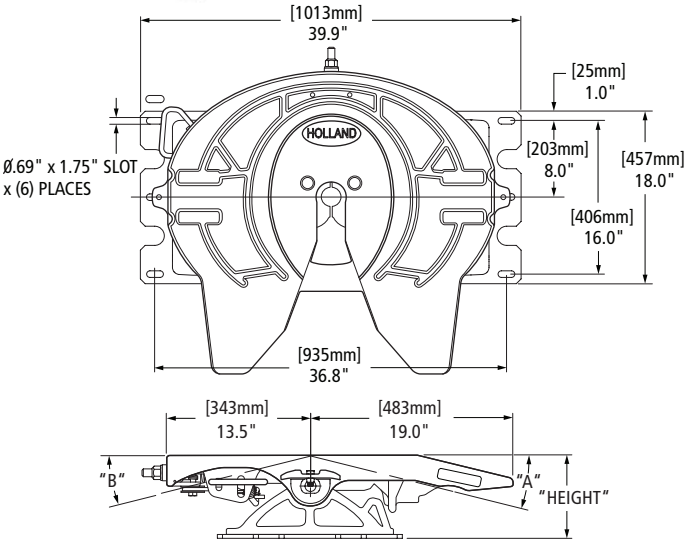

STANDARD OPTION CODES Replaces the Underscore (__) on the new and legacy part number.	
CODE	DESCRIPTION
00 / Blank	Standard, No Other Options.
01	Mounting Plate*
02	Manual Secondary Lock
04	Mounting Plate and Manual Seconday Lock
14	Grease Fitting in Top Plate, Four (4) Fittings
24	Drilled and Tapped for Auto Lube
28	Dolly Handle

CODE	DESCRIPTION
80	Air Release, OEM Replacement, Left-Hand Only
86	Air Release, Aftermarket Installations, Left-Hand Only
92	Non-Drop Handle
1A	Manual Secondary Lock and Air Release
0C	Earless Top Plate
EL	Electronic Lock Indicator

* Corrugated Plate Option adds 0.9" to height.

FW PART NUMBER (CAST BRACKET)◊	LEGACY FW PART NUMBER (FABRICATED BRACKET)*◊	HEIGHT IN [MM]	A	B	REPLACEMENT BRACKETS**	FW WEIGHT LBS [KG]
FW35Y600XL__	FW35-7804XL__	5.6" [142]	8°	8°	RK-Y600	300.00 [136.08]
FW35Y700XL__	FW35-7803XL__	6.6" [168]	11°	11°	RK-Y700	306.00 [138.80]
FW35Y800XL__	FW35-7802XL__	7.6" [193]	14°	14°	RK-Y800	310.00 [140.61]
FW35Y900XL__	FW35-7801XL__	8.6" [218]	17°	17°	RK-Y900	316.00 [143.34]

◊ For right-hand release fifth wheels, change "L" to "R" in part number.
*No Longer Available.
** See bracket section for more information.

NOTE: A flat or corrugated mounting plate is required for foot mount brackets.

FW35 Stationary Integrated Plate Mount



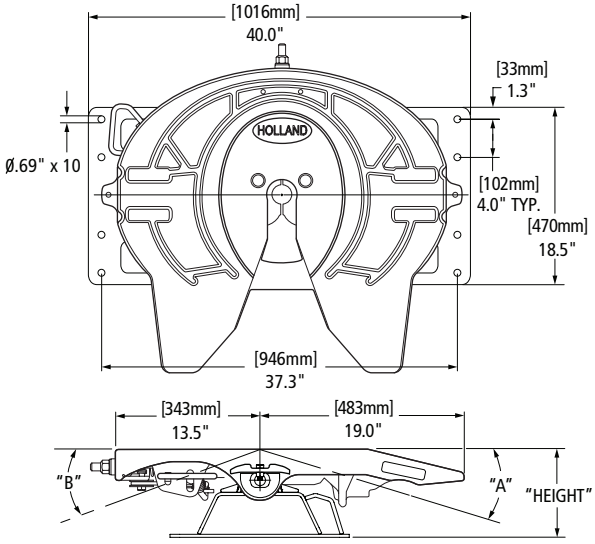

STANDARD OPTION CODES Replaces the Underscore (__) on the new and legacy part number.	
CODE	DESCRIPTION
00 / Blank	Standard, No Other Options.
02	Manual Secondary Lock
14	Grease Fitting in Top Plate, Four (4) Fittings
24	Drilled and Tapped for Auto Lube
28	Dolly Handle
48	Manual Secondary Lock, Drilled and Tapped for Auto Lube

CODE	DESCRIPTION
80	Air Release, OEM Replacement, Left-Hand Only
86	Air Release, Aftermarket Installations, Left-Hand Only
92	Non-Drop Handle
0C	Earless Top Plate
EL	Electronic Lock Indicator

FW PART NUMBER (CAST BRACKET)◊	LEGACY FW PART NUMBER (FABRICATED BRACKET)*◊	HEIGHT IN [MM]	A	B	REPLACEMENT BRACKETS**	FW WEIGHT LBS [KG]
FW35Z600XL__	FW35-7886XL__	5.6" [142]	8°	8°	RK-Z600	316.00 [143.34]
FW35Z700XL__	FW35-7885XL__	6.6" [168]	11°	11°	RK-Z700	324.00 [146.96]
FW35Z800XL__	FW35-7884XL__	7.6" [193]	14°	14°	RK-Z800	331.00 [150.14]
FW35Z900XL__	FW35-7883XL__	8.6" [218]	17°	17°	RK-Z900	327.00 [148.32]

◊ For right-hand release fifth wheels, change "L" to "R" in part number.
* No Longer Available
** See bracket section for more information.

XL-FW10081PM-en-US Rev D 2016-03-01 Amendments and errors reserved. © SAF-HOLLAND, Inc.

FW35 Stationary Brackets for Angle Mounting

Also Available With Angle Later In This Section.



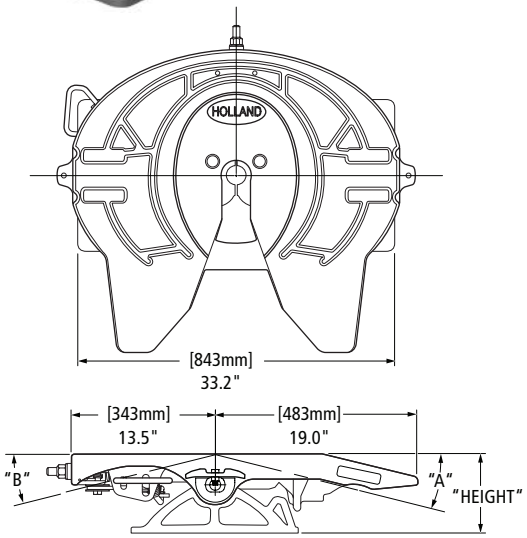

STANDARD OPTION CODES Replaces the Underscore (__) on the new and legacy part number.	
NUMBER CODE	**DESCRIPTION**
00 / Blank	Standard, No Other Options.
02	Manual Secondary Lock
14	Grease Fittings in Top Plate, Four (4) Fittings
24	Drilled and Tapped for Auto Lube
28	Dolly Handle
80	Air Release, OEM Replacement, Left-Hand Only
86	Air Release, New Installations, Left-Hand Only
0C	Earless Top Plate
1A	Manual Secondary Lock and Air Release
EA	Electronic Lock Indicator and Air Release

FW PART NUMBER (CAST BRACKET)◊	LEGACY FW PART NUMBER (FABRICATED BRACKET)*◊	HEIGHT IN [MM]	A	B	REPLACEMENT BRACKETS**	FW WEIGHT LBS [KG]
FW35X600XL__	FW35-7824XL__	5.6" [142]	8°	8°	RK-X600	270.00 [122.47]
FW35X700XL__	FW35-7823XL__	6.6" [168]	11°	11°	RK-X700	276.00 [125.19]
FW35X800XL__	FW35-7822XL__	7.6" [193]	14°	14°	RK-X800	281.00 [127.46]
FW35X900XL__	FW35-7821XL__	8.6" [218]	17°	17°	RK-X900	286.00 [129.73]

◊ For right-hand release fifth wheels, change "L" to "R" in part number.
*No Longer Available.
** See bracket section for more information.

FW35 Stationary No Tilt Outboard and Inboard for Angle Mount

Also Available With Angle Later In This Section.


Outboard


Inboard

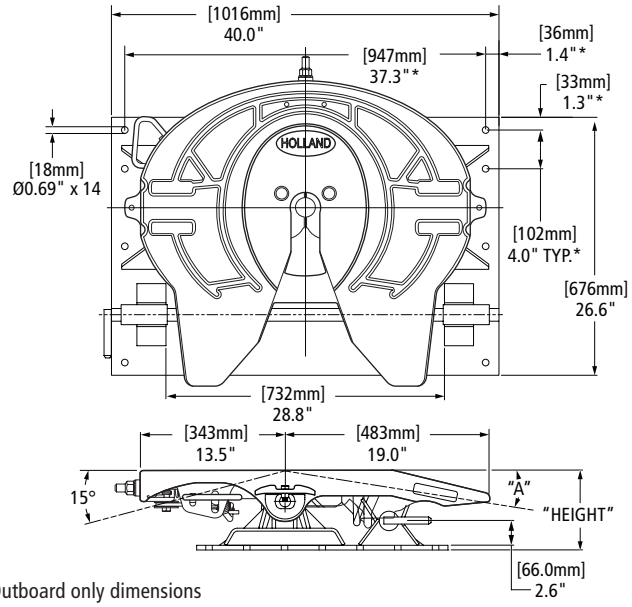

* Outboard only dimensions

STANDARD OPTION CODES Replaces the Underscore (__) on the new and legacy part number.	
NUMBER CODE	**DESCRIPTION**
06	No-Tilt
34	Manual Secondary Lock and No-Tilt

ILS OUTBOARD FW PART NUMBER◊	LEGACY FW PART NUMBER*◊	HEIGHT IN [MM]	A	REPLACEMENT BRACKETS**	FW WEIGHT LBS [KG]
FW35N800YL00	FW35-8984XL__	7.8" [198]	9°	XA-8984	490.00 [222.26]
FW35N900YL00	FW35-8983XL__	8.8" [224]	14°	XA-8983	490.00 [222.26]

ILS INBOARD FW PART NUMBER◊	LEGACY FW PART NUMBER*◊	HEIGHT IN [MM]	A	REPLACEMENT BRACKETS**	FW WEIGHT LBS [KG]
FW35N800ZL00	FW35-8922XL__	7.7" [196]	9°	XA-8922	453.00 [205.48]

NOTE: See Accessories Section for No-Tilt Kits. Not included in Replacement Bracket part number.

NOTE: No-Tilt Bar not included in Bracket Replacement Kit, must be purchased separately.

 Amendments and errors reserved. © SAF-HOLLAND, Inc.

FW35 Sliding ILS Outboard Mount



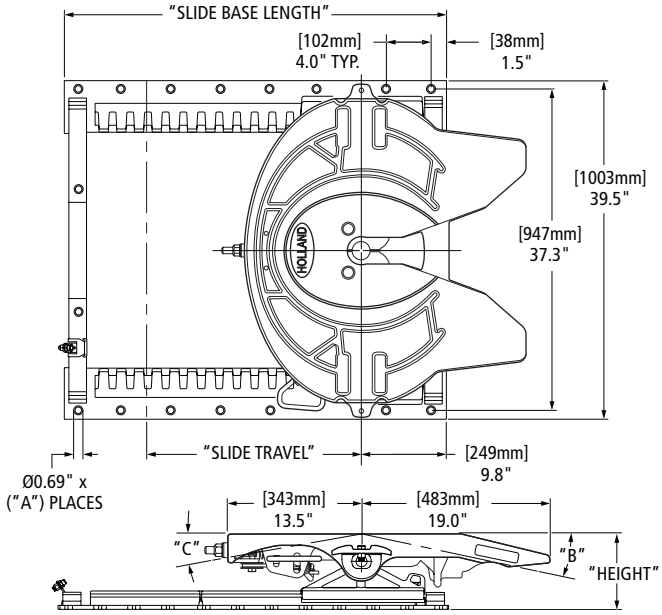

STANDARD OPTION CODES Replaces the Underscore (__) on the new and legacy part number.	
NUMBER CODE	DESCRIPTION
00 / Blank	Standard, No Other Options
02	Manual Secondary Lock
14	Grease Fittings in Top Plate, Four (4) Fittings
24	Drilled and Tapped for Auto Lube
28	Dolly Handle
48	Manual Secondary Lock, Drilled and Tapped for Auto Lube

STANDARD OPTION CODES Replaces the Underscore (__) on the new and legacy part number.	
NUMBER CODE	DESCRIPTION
80	Air Release, OEM Replacement, Left-Hand Only
86	Air Release, New Installations, Left-Hand Only
1A	Manual Secondary Lock and Air Release
EL	Electronic Lock Indicator
0U	Drilled and Tapped for Auto Lube and Air Release
EA	Electronic Lock Indicator and Air Release

ILS FW PART NUMBER◊	LEGACY		HEIGHT IN [MM]	SLIDE TRAVEL IN [MM]	SLIDE BASE LENGTH IN [MM]	A # OF HOLES	B	C	REPLACEMENT SLIDE BASE AND BRACKET**	REPLACEMENT SLIDE BASE**	REPLACEMENT BRACKET**	FW WEIGHT LBS [KG]
	TRADITIONAL PART NUMBER (AIR RELEASE)*◊	TRADITIONAL PART NUMBER (MANUAL RELEASE)*◊										
FW35A712XL__	FW35-8003T1L__	FW35-8013T1L__	6.7" [170]	12" [305]	31" [787]	16	8°	8°	XA-A712	XA-A12	RK-10689-1	423.00 [191.87]
FW35A724XL__	FW35-8003T3L__	FW35-8013T3L__		24" [610]	43" [1092]	22			XA-A724	XA-A24		457.00 [207.29]
FW35A736XL__	FW35-8003T4L__	FW35-8013T4L__		36" [915]	55" [1397]	28			XA-A736	XA-A36		491.00 [222.71]
FW35A748XL__	FW35-8003T5L__	FW35-8013T5L__		48" [1219]	67" [1702]	34			XA-A748	XA-A48		524.00 [237.68]
FW35A812XL__	FW35-8002T1L__	FW35-8012T1L__	7.7" [196]	12" [305]	31" [787]	16	12°	10°	XA-A812	XA-A12	RK-10689-2	430.00 [195.04]
FW35A824XL__	FW35-8002T3L__	FW35-8012T3L__		24" [610]	43" [1092]	22			XA-A824	XA-A24		468.00 [212.28]
FW35A836XL__	FW35-8002T4L__	FW35-8012T4L__		36" [915]	55" [1397]	28			XA-A836	XA-A36		496.00 [224.98]
FW35A848XL__	FW35-8002T5L__	FW35-8012T5L__		48" [1219]	67" [1702]	34			XA-A848	XA-A48		530.00 [240.40]
FW35A912XL__	FW35-8001T1L__	FW35-8011T1L__	8.7" [221]	12" [305]	31" [787]	16	15°	12°	XA-A912	XA-A12	RK-10689-3	429.00 [194.59]
FW35A924XL__	FW35-8001T3L__	FW35-8011T3L__		24" [610]	43" [1092]	22			XA-A924	XA-A24		463.00 [210.01]
FW35A936XL__	FW35-8001T4L__	FW35-8011T4L__		36" [915]	55" [1397]	28			XA-A936	XA-A36		496.00 [224.98]
FW35A948XL__	FW35-8001T5L__	FW35-8011T5L__		48" [1219]	67" [1702]	34			XA-A948	XA-A48		530.00 [240.40]

◊ For right-hand release fifth wheels, change "L" to "R" in part number.
* No longer available
** See bracket section for more information.

XL-FW10081PM-en-US Rev D 2016-03-01 Amendments and errors reserved. © SAF-HOLLAND, Inc.

FW35 Sliding ILS Inboard Mount for Angle

Also Available With Angle Later In This Section.



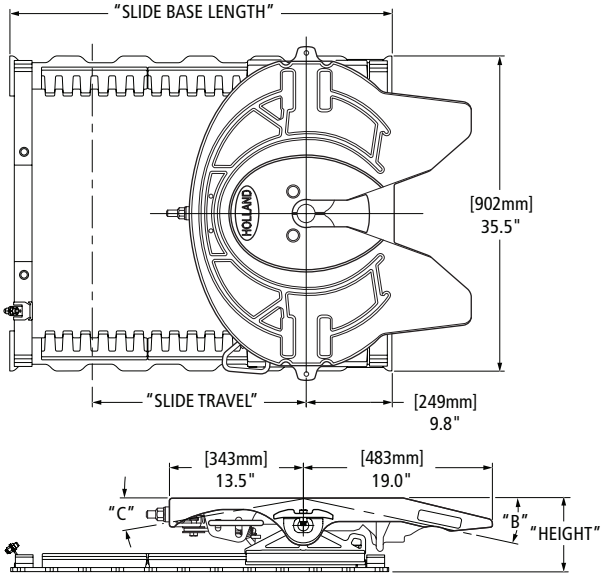

STANDARD OPTION CODES Replaces the Underscore (__) on the new and legacy part number.	
NUMBER CODE	DESCRIPTION
00 / Blank	Standard, No Other Options
02	Manual Secondary Lock
14	Grease Fittings in Top Plate, Four (4) Fittings
24	Drilled and Tapped for Auto Lube

STANDARD OPTION CODES Replaces the Underscore (__) on the new and legacy part number.	
NUMBER CODE	DESCRIPTION
28	Dolly Handle
80	Air Release, OEM Replacement, Left-Hand Only
86	Air Release, New Installations, Left-Hand Only
1A	Manual Secondary Lock and Air Release

ILS FW PART NUMBER◊	LEGACY		HEIGHT IN [MM]	SLIDE TRAVEL IN [MM]	SLIDE BASE LENGTH IN [MM]	B	C	REPLACEMENT SLIDE BASE AND BRACKET**	REPLACEMENT SLIDE BASE**	REPLACEMENT BRACKETS**	FW WEIGHT LBS [KG]
	TRADITIONAL PART NUMBER (AIR RELEASE)*◊	TRADITIONAL PART NUMBER (MANUAL RELEASE)*◊									
FW35B712XL__	FW35-7003X1L__	FW35-7013X1L__	6.7" [170]	12" [305]	31" [787]	8°	8°	XA-B712	XA-B12	RK-10689-1	408.00 [185.07]
FW35B724XL__	FW35-7003X2L__	FW35-7013X2L__		24" [610]	43" [1092]			XB-B724	XA-B24		435.00 [197.31]
FW35B736XL__	FW35-7003X4L__	FW35-7013X4L__		36" [915]	55" [1397]			XA-B736	XA-B36		464.00 [210.47]
FW35B748XL__	FW35-7003X5L__	FW35-7013X5L__		48" [1219]	67" [1702]			XA-B748	XA-B48		491.00 [222.71]
FW35B812XL__	FW35-7002X1L__	FW35-7012X1L__	7.7" [196]	12" [305]]	31" [787]	12°	10°	XA-B812	XA-B12	RK-10689-2	413.00 [187.33]
FW35B824XL__	FW35-7002X2L__	FW35-7012X2L__		24" [610]	43" [1092]			XA-B824	XA-B24		440.00 [199.58]
FW35B836XL__	FW35-7002X4L__	FW35-7012X4L__		36" [915]	55" [1397]			XA-B836	XA-B36		470.00 [213.19]
FW35B848XL__	FW35-7002X5L__	FW35-7012X5L__		48" [1219]	67" [1702]			XA-B848	XA-B48		496.00 [224.98]
FW35B912XL__	FW35-7001X1L__	FW35-7011X1L__	8.7" [221]	12" [305]	31" [787]	15°	12°	XA-B912	XA-B12	RK-10689-3	412.00 [186.88]
FW35B924XL__	FW35-7001X2L__	FW35-7011X2L__		24" [610]	43" [1092]			XA-B924	XA-B24		440.00 [199.58]
FW35B936XL__	FW35-7001X4L__	FW35-7011X4L__		36" [915]	55" [1397]			XA-B936	XA-B36		468.00 [212.28]
FW35B948XL__	FW35-7001X5L__	FW35-7011X5L__		48" [1219]	67" [1702]			XA-B948	XA-B48		496.00 [224.98]

◊ For right-hand release fifth wheels, change "L" to "R" in part number.
* No longer available
** See bracket section for more information.

 Amendments and errors reserved. © SAF-HOLLAND, Inc.

FW35 Sliding Traditional Outboard Mount

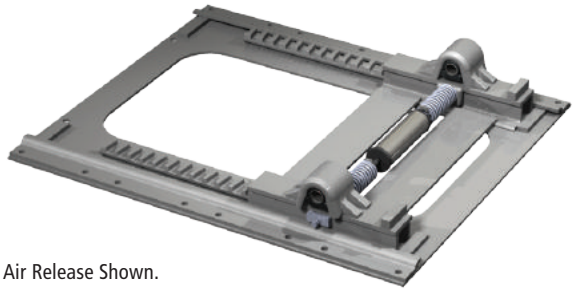

Air Release Shown.

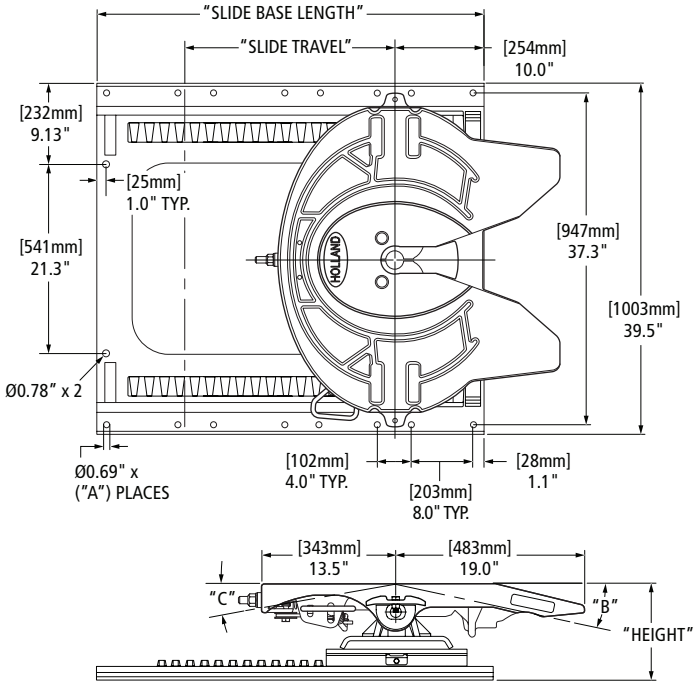

STANDARD OPTION CODES Replaces the Underscore (__) on the new and legacy part number.	
NUMBER CODE	**DESCRIPTION**
00 / Blank	Standard, No Other Options
02	Manual Secondary Lock
14	Grease Fittings in Top Plate, Four (4) Fittings
24	Drilled and Tapped for Auto Lube
28	Dolly Handle
47	Tilt Stops
48	Manual Secondary Lock and Drilled and Tapped for Auto Lube
80	Air Release, OEM Replacement Left-Hand Only
86	Air Release, Aftermarket Installations, Air Control Modules Included Left-Hand Only
96	Lincoln Lube System and Weight Saver
0B	Lubraquip Lube System
47	Tilt Stops

STANDARD OPTION CODES Replaces the Underscore (__) on the new and legacy part number.	
NUMBER CODE	**DESCRIPTION**
0G	Plunger Dip Control
0H	Plunger Dip Control and Lubraquip Lube System
0K	Plunger Dip Control and Air Release, Aftermarket Installations, Air Control Modules Included Left-Hand Only
0L	Plunger Dip Control and Manual Secondary Lock
0U	Drilled and Tapped for Auto Lube and Air Release, OEM Replacement Left-Hand Only.
1A	Manual Secondary Lock and Air Release
EL	Electronic Lock Indicator
EA	Electronic Lock Indicator and Air Release, OEM Replacement Left-Hand Only

LEGACY FW PART NUMBER*◊	REPLACED BY ILS FW PART NUMBER◊	SLIDE BRACKET TYPE	HEIGHT IN [MM]	SLIDE TRAVEL IN [MM]	SLIDE BASE LENGTH IN [MM]	A # OF HOLES	B	C	REPLACEMENT SLIDE BASE AND BRACKET**	REPLACEMENT SLIDE BASE**	REPLACEMENT BRACKETS**	FW WEIGHT LBS [KG]
FW35-8003T1L__	FW35A712XL__	Air Release	6.7" [170]	10.7" [272]	42.2" [1072]	16	11°†	5°	—	XA-07871-1L	XA-7003	503.00 [228.16]
FW35-8003T2L__	FW35A724XL__			16.8" [427]	50.2" [1275]	18			—	XA-07871-2L		526.00 [238.59]
FW35-8003T3L__	FW35A724XL__			24.5" [622]	55.2" [1402]	20			—	XA-07871-3L		546.00 [247.66]
FW35-8003T4L__	FW35A736XL__			41.3" [1049]	74.2" [1885]	26			—	XA-07871-4L		606.00 [274.88]
FW35-8002T1L__	FW35A812XL__		7.7" [196]	12.2" [310]	34.2" [869]	12	11°	19°	—	XA-07871-1	XA-7002	452.00 [205.02]
FW35-8002T2L__	FW35A824XL__			18.4" [467]	42.2" [1072]	16			—	XA-07871-2		478.00 [216.82]
FW35-8002T3L__	FW35A824XL__			24.5" [622]	46.2" [1173]	16			—	XA-07871-3		492.00 [223.17]
FW35-8002T4L__	FW35A836XL__			36.7" [932]	58.2" [1478]	20			—	XA-07871-4		532.00 [241.31]
FW35-8002T5L__	FW35A848XL__			48.9" [1242]	70.2" [1783]	24			—	XA-07871-5		572.00 [259.45]

◊ For right-hand release fifth wheels, change "L" to "R" in part number.
† If Option Code 47 Dimension Changes to 8°
* No longer available if replacement exists.
** See bracket section for more information.

XL-FW10081PM-en-US Rev D 2016-03-01 Amendments and errors reserved. © SAF-HOLLAND, Inc.

LEGACY FW PART NUMBER *◊	REPLACED BY ILS FW PART NUMBER◊	SLIDE BRACKET TYPE	HEIGHT IN [MM]	SLIDE TRAVEL IN [MM]	SLIDE BASE LENGTH IN [MM]	A # OF HOLES	B	C	REPLACEMENT SLIDE BASE AND BRACKET**	REPLACEMENT SLIDE BASE**	REPLACEMENT BRACKETS**	FW WEIGHT LBS [KG]
FW35-8001T1L__	FW35A912XL__	Air Release	8.7" [221]	12.2" [310]	34.2" [869]	12	17°	19°	—	XA-07871-1	XA-7001	457.00 [207.29]
FW35-8001T2L__	FW35A924XL__			18.4" [467]	42.2" [1072]	16			—	XA-07871-2		483.00 [219.09]
FW35-8001T3L__	FW35A924XL__			24.5" [622]	46.2" [1173]	16			—	XA-07871-3		497.00 [225.44]
FW35-8001T4L__	FW35A936XL__			36.7" [932]	58.2" [1478]	20			—	XA-07871-4		537.00 [243.58]
FW35-8001T5L__	FW35A948XL__			48.9" [1242]	70.2" [1783]	24			—	XA-07871-5		577.00 [261.72]
FW35-8301T1L__	—		8.2" [208]	10.7" [272]	42.2" [1072]	16	16°	15°	XA-8311-T1	XA-07871-1L	XA-7301	509.00 [230.88]
FW35-8301T2L__	—			16.8" [427]	50.2" [1275]	18			XA-8311-T2	XA-07871-2L		532.00 [241.31]
FW35-8301T3L__	—			24.5" [622]	55.2" [1402]	20			XA-8311-T3	XA-07871-3L		552.00 [250.38]
FW35-8301T4L__	—			41.3" [1049]	74.2" [1885]	26			XA-8311-T4	XA-07871-4L		612.00 [277.60]
FW35-8009T2L__	—		10.2" [259]	13.8" [351]	42.2" [1072]	16	21°	22°	XA-8301-T1	XA-07871-2	XA-7009	515.00 [233.60]
FW35-8009T3L__	—			19.9" [505]	46.2" [1173]	16			XA-8301-T2	XA-07871-3		528.00 [239.50]
FW35-8009T4L__	—			32.1" [815]	58.2" [1478]	20			XA-8301-T3	XA-07871-4		568.00 [257.64]
FW35-8009T5L__	—			44.4" [1128]	70.2" [1783]	24			XA-8301-T4	XA-07871-5		609.00 [276.24]
FW35-8013T1L__	FW35A712XL__	Manual Release	6.7" [170]	10.7" [272]	42.2" [1072]	16	11°†	5°	—	XA-07871-1L	XA-7013	464.00 [210.47]
FW35-8013T2L__	FW35A724XL__			16.8" [427]	50.2" [1275]	18			—	XA-07871-2L		490.00 [222.26]
FW35-8013T3L__	FW35A724XL__			24.5" [622]	55.2" [1402]	20			—	XA-07871-3L		536.00 [243.13]
FW35-8013T4L__	FW35A736XL__			41.3" [1049]	74.2" [1885]	26			—	XA-07871-4L		544.00 [246.75]
FW35-8012T1L__	FW35A812XL__		7.7" [196]	12.2" [310]	34.2" [869]	12	11°	11°	—	XA-07871-1	XA-7012	451.00 [204.57]
FW35-8012T2L__	FW35A824XL__			18.4" [467]	42.2" [1072]	16			—	XA-07871-2		477.00 [216.36]
FW35-8012T3L__	FW35A824XL__			24.5" [622]	46.2" [1173]	16			—	XA-07871-3		491.00 [222.71]
FW35-8012T4L__	FW35A836XL__			58.2" [1478]	36.7" [932]	20			—	XA-07871-4		531.00 [240.86]
FW35-8012T5L__	FW35A848XL__			48.8" [1240]	70.2" [1783]	24			—	XA-07871-5		571.00 [259.00]
FW35-8011T1L__	FW35A912XL__		8.7" [221]	12.2" [310]	34.2" [869]	12	17°	19°	—	XA-07871-1	XA-7011	457.00 [207.29]
FW35-8011T2L__	FW35A924XL__			18.4" [467]	42.2" [1072]	16			—	XA-07871-2		483.00 [219.09]
FW35-8011T3L__	FW35A924XL__			46.2" [1173]	24.5" [622]	16			—	XA-07871-3		497.00 [225.44]
FW35-8011T4L__	FW35A936XL__			36.7" [932]	58.2" [1478]	20			—	XA-07871-4		537.00 [243.58]
FW35-8011T5L__	FW35A948XL__			48.9" [1242]	70.2" [1783]	24			—	XA-07871-5		577.00 [261.72]
FW35-8311T1L__	—		8.2" [208]	10.7" [272]	42.2" [1072]	16	16°	13°	XA-8311-T1	XA-07871-1L	XA-7311	502.00 [227.70]
FW35-8311T2L__	—			16.8" [427]	50.2" [1275]	18			XA-8311-T2	XA-07871-2L		524.00 [237.68]
FW35-8311T3L__	—			24.5" [622]	55.2" [1402]	20			XA-8311-T3	XA-07871-3L		544.00 [246.75]
FW35-8311T4L__	—			41.3" [1049]	74.2" [1885]	26			XA-8311-T4	XA-07871-4L		604.00 [273.97]
FW35-8019T2L__	—		10.2" [259]	13.8" [351]	42.2" [1072]	16	21°	21°	XA-8019-T2	XA-07871-2	XA-7019	514.00 [233.15]
FW35-8019T3L__	—			19.9" [505]	46.2" [1173]	16			XA-8019-T3	XA-07871-3		528.00 [239.50]
FW35-8019T4L__	—			32.1" [815]	58.2" [1478]	20			XA-8019-T4	XA-07871-4		568.00 [257.64]
FW35-8019T5L__	—			44.4" [1128]	70.2" [1783]	24			XA-8019-T5	XA-07871-5		608.00 [275.78]

◊ For right-hand release fifth wheels, change "L" to "R" in part number.
† If Option Code 47 Dimension Changes to 8°
* No longer available if replacement exists.
** See bracket section for more information.

 Amendments and errors reserved. © SAF-HOLLAND, Inc.

FW35 Sliding Traditional Inboard for Angle Mount

Also Available With Angle Later In This Section.

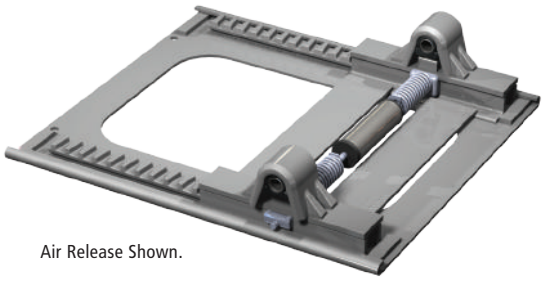

Air Release Shown.

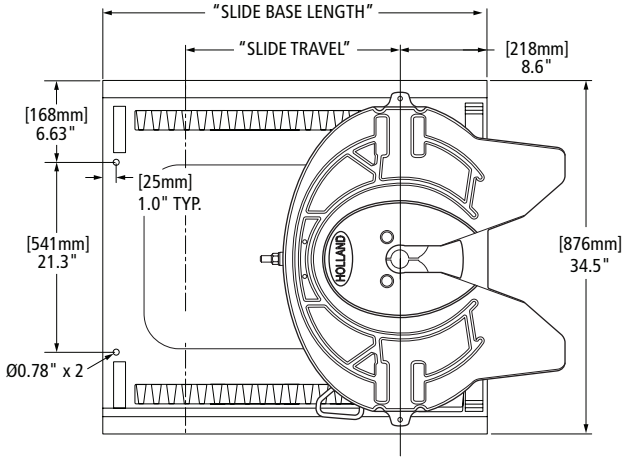

STANDARD OPTION CODES Replaces the Underscore (__) on the new and legacy part number.	
NUMBER CODE	**DESCRIPTION**
00 / Blank	Standard, No Other Options
02	Manual Secondary Lock
11	Weight Saver Cutout
14	Grease Fittings in Top Plate, Four (4) Fittings
24	Drilled and Tapped for Auto Lube
28	Dolly Handle
30	Manual Secondary Lock and Weight Saver Cutout
55	Weight Saver Cutout and Drilled and Tapped for Auto Lube
80	Air Release, OEM Replacement, Left-Hand Only
86	Air Release, Aftermarket Installations, Air Control Modules Included, Left-Hand Only
88	Manual Secondary Lock, Weight Saver Cutout and Air Release, OEM Replacement, Left-Hand Only
90	Weight Saver Cutout and Air Release, OEM Replacement, Left-Hand Only
95	Weight Saver Cutout and Air Release, Aftermarket Installations, Air Control Modules Included, Left-Hand Only
96	Lincoln Lube System and Weight Saver Cutout
0C	Earless Top Plate

STANDARD OPTION CODES Replaces the Underscore (__) on the new and legacy part number.	
NUMBER CODE	**DESCRIPTION**
0D	Earless Top Plate and Weight Saver Cutout
0F	Earless Top Plate and Manual Secondary Lock
0U	Drilled and Tapped for Auto Lub and Air Release, OEM Replacement Left-Hand Only
1A	Manual Secondary Release Lock & Air Release

LEGACY FW PART NUMBER*◊	REPLACED BY ILS FW PART NUMBER◊	SLIDE BRACKET TYPE	HEIGHT IN [MM]	SLIDE TRAVEL IN [MM]	SLIDE BASE LENGTH IN [MM]	B	C	REPLACEMENT SLIDE BASE AND BRACKET**	REPLACEMENT SLIDE BASE**	REPLACEMENT BRACKETS**	FW WEIGHT LBS [KG]
FW35-7003X1L__	FW35B712XL__	Air Release	6.7" [170]	10.7" [272]	38.9" [988]	11°	7°	—	XA-0751-1	XA-7003	464.00 [210.47]
FW35-7003X2L__	FW35B724XL__			16.8" [427]	45.0" [1143]			—	XA-0751-2		477.00 [216.36]
FW35-7003X3L__	FW35B724XL__			24.5" [622]	52.6" [1336]			—	XA-0751-3A		496.00 [224.98]
FW35-7003X4L__	FW35B736XL__			41.3" [1049]	69.5" [1765]			—	XA-0751-4		539.00 [244.49]
FW35-7003X5L__	FW35B748XL__			53.6" [1361]	82.0" [2082]			—	XA-0751-5		571.00 [259.00]
FW35-7003X6L__	—			65.8" [1671]	94.0" [2387]			XA-7003-X6	XA-0751-6		602.00 [273.06]
FW35-7002X1L__	FW35B812XL__		7.7" [196]	12.2" [310]	32.8" [833]	14°	19°	—	XA-0750-1	XA-7002	456.00 [206.84]
FW35-7002X2L__	FW35B824XL__			18.4" [467]	38.9" [988]			—	XA-0750-2		484.00 [219.54]
FW35-7002X3L__	FW35B824XL__			24.5" [622]	45.0" [1143]			—	XA-0750-3		509.00 [230.88]
FW35-7002X4L__	FW35B836XL__			36.7" [932]	57.2" [1452]			—	XA-0750-4		562.00 [254.92]
FW35-7002X5L__	FW35B848XL__			48.9" [1242]	69.5" [1765]			—	XA-0750-5		615.00 [278.96]
FW35-7002X6L__	—			61.2" [1554]	82.0" [2082]			XA-7002-X6	XA-0750-6		673.00 [305.27]
FW35-7002X7L__	—			73.4" [1864]	94.0" [2387]			XA-7002-X7	XA-0750-7		475.00 [215.46]

◊ For right-hand release fifth wheels, change "L" to "R" in part number.
* No longer available if replacement exists.
** See bracket section for more information.

XL-FW10081PM-en-US Rev D 2016-03-01 Amendments and errors reserved. © SAF-HOLLAND, Inc.

LEGACY FW PART NUMBER*◊	REPLACED BY ILS FW PART NUMBER◊	SLIDE BRACKET TYPE	HEIGHT IN [MM]	SLIDE TRAVEL IN [MM]	SLIDE BASE LENGTH IN [MM]	B	C	REPLACEMENT SLIDE BASE AND BRACKET**	REPLACEMENT SLIDE BASE**	REPLACEMENT BRACKETS**	FW WEIGHT LBS [KG]
FW35-7001X1L__	FW35B912XL__	Air Release	8.7" [221]	12.2" [310]	32.8" [833]	16°	19°	—	XA-0750-1	XA-7001	471.00 [213.64]
FW35-7001X2L__	FW35B924XL__			18.4" [467]	38.9" [988]			—	XA-0750-2		499.00 [226.34]
FW35-7001X3L__	FW35B924XL__			24.5" [622]	45.0" [1143]			—	XA-0750-3		523.00 [237.23]
FW35-7001X4L__	FW35B936XL__			36.7" [932]	57.2" [1452]			—	XA-0750-4		576.00 [261.27]
FW35-7001X5L__	FW35B948XL__			48.9" [1242]	69.5" [1765]			—	XA-0750-5		629.00 [285.31]
FW35-7001X6L__	—			61.2" [1554]	82.0" [2082]			XA-7001-X6	XA-0750-6		688.00 [312.07]
FW35-7301X1L__	—		8.2" [208]	10.7" [272]	38.9" [988]	16°	15°	XA-7301-X1	XA-0751-1	XA-7301	471.00 [213.64]
FW35-7301X2L__	—			16.8" [427]	45.0" [1143]			XA-7301-X2	XA-0751-2		485.00 [219.99]
FW35-7301X3L__	—			24.5" [622]	52.6" [1336]			XA-7301-X3	XA-0751-3A		514.00 [233.15]
FW35-7301X4L__	—			41.3" [1049]	69.5" [1765]			XA-7301-X4	XA-0751-4		534.00 [242.22]
FW35-7301X5L__	—			53.6" [1361]	82.0" [2082]			XA-7301-X5	XA-0751-5		579.00 [262.63]
FW35-7301X6L__	—			65.8" [1671]	94.0" [2387]			XA-7301-X6	XA-0751-6		610.00 [276.69]
FW35-7009X2L__	—		10.2" [259]	13.8" [351]	38.9" [988]	21°	22°	XA-7009-X2	XA-0750-2	XA-7009	510.00 [231.33]
FW35-7009X3L__	—			19.9" [505]	45.0" [1143]			XA-7009-X3	XA-0750-3		535.00 [242.67]
FW35-7009X4L__	—			32.1" [815]	57.2" [1452]			XA-7009-X4	XA-0750-4		587.00 [266.26]
FW35-7009X5L__	—			44.4" [1128]	69.5" [1765]			XA-7009-X5	XA-0750-5		641.00 [290.75]
FW35-7009X6L__	—			56.6" [1438]	82.0" [2082]			XA-7009-X6	XA-0750-6		727.00 [329.76]
FW35-7013X1L__	FW35B712XL__	Manual Release	6.7" [170]	10.7" [272]	38.9" [988]	11°	5°	—	XA-0751-1	XA-7013	455.00 [206.38]
FW35-7013X2L__	FW35B724XL__			16.8" [427]	45.0" [1143]			—	XA-0751-2		468.00 [212.28]
FW35-7013X3L__	FW35B724XL__			24.5" [622]	52.6" [1336]			—	XA-0751-3A		489.00 [221.81]
FW35-7013X4L__	FW35B736XL__			41.3" [1049]	69.5" [1765]			—	XA-0751-4		532.00 [241.31]
FW35-7013X5L__	FW35B748XL__			53.6" [1361]	82.0" [2082]			—	XA-0751-5		563.00 [255.37]
FW35-7013X6L__	—			65.8" [1671]	94.0" [2387]			XA-7013-X6	XA-0751-6		594.00 [269.43]
FW35-7012X1L__	FW35B812XL__		7.7" [196]	12.2" [310]	32.8" [833]	14°	11°	—	XA-0750-1	XA-7012	465.00 [210.92]
FW35-7012X2L__	FW35B824XL__			18.4" [467]	38.9" [988]			—	XA-0750-2		493.00 [223.62]
FW35-7012X3L__	FW35B824XL__			24.5" [622]	45.0" [1143]			—	XA-0750-3		518.00 [234.96]
FW35-7012X4L__	FW35B836XL__			36.7" [932]	57.2" [1452]			—	XA-0750-4		571.00 [259.00]
FW35-7012X5L__	FW35B848XL__			48.9" [1242]	69.5" [1765]			—	XA-0750-5		624.00 [283.04]
FW35-7012X6L__	—			61.2" [1554]	82.0" [2082]			XA-7012-X6	XA-0750-6		682.00 [309.35]
FW35-7011X1L__	FW35B912XL__		8.7" [221]	12.2" [310]	32.8" [833]	16°	19°	—	XA-0750-1	XA-7011	471.00 [213.64]
FW35-7011X2L__	FW35B924XL__			18.4" [467]	38.9" [988]			—	XA-0750-2		499.00 [226.34]
FW35-7011X3L__	FW35B924XL__			24.5" [622]	45.0" [1143]			—	XA-0750-3		524.00 [237.68]
FW35-7011X4L__	FW35B936XL__			36.7" [932]	57.2" [1452]			—	XA-0750-4		576.00 [261.27]
FW35-7011X5L__	FW35B948XL__			48.9" [1242]	69.5" [1765]			—	XA-0750-5		629.00 [285.31]
FW35-7011X6L__	—			61.2" [1554]	82.0" [2082]			XA-7011-X6	XA-0750-6		688.00 [312.07]
FW35-7311X1L__	—		8.2" [208]	10.7" [272]	38.9" [988]	16°	13°	XA-7311-X1	XA-0751-1	XA-7311	462.00 [209.56]
FW35-7311X2L__	—			16.8" [427]	45.0" [1143]			XA-7311-X2	XA-0751-2		476.00 [215.91]
FW35-7311X3L__	—			24.5" [622]	52.6" [1336]			XA-7311-X3	XA-0751-3A		494.00 [224.07]
FW35-7311X4L__	—			41.3" [1049]	69.5" [1765]			XA-7311-X4	XA-0751-4		525.00 [238.14]
FW35-7311X5L__	—			53.6" [1361]	82.0" [2082]			XA-7311-X5	XA-0751-5		570.00 [258.55]
FW35-7311X6L__	—			65.8" [1671]	94.0" [2387]			XA-7311-X6	XA-0751-6		601.00 [272.61]
FW35-7019X2L__	—		10.2" [259]	13.8" [351]	38.9" [988]	21°	21°	—	XA-0750-2	XA-7019	529.00 [239.95]
FW35-7019X3L__	—			19.9" [505]	45.0" [1143]			—	XA-0750-3		554.00 [251.29]
FW35-7019X4L__	—			32.1" [815]	57.2" [1452]			—	XA-0750-4		607.00 [275.33]
FW35-7019X5L__	—			44.4" [1128]	69.5" [1765]			—	XA-0750-5		660.00 [299.37]
FW35-7019X6L__	—			56.6" [1438]	82.0" [2082]			—	XA-0750-6		718.00 [325.68]

◊ For right-hand release fifth wheels, change "L" to "R" in part number.
* No longer available if replacement exists.
** See bracket section for more information.

 Amendments and errors reserved. © SAF-HOLLAND, Inc.

FW35 Sliding Traditional
No Tilt Outboard Mount

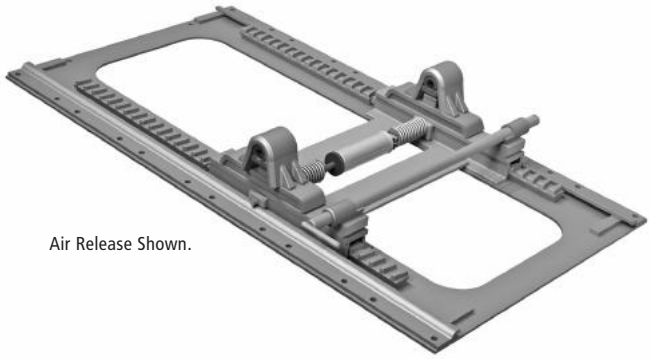

Air Release Shown.

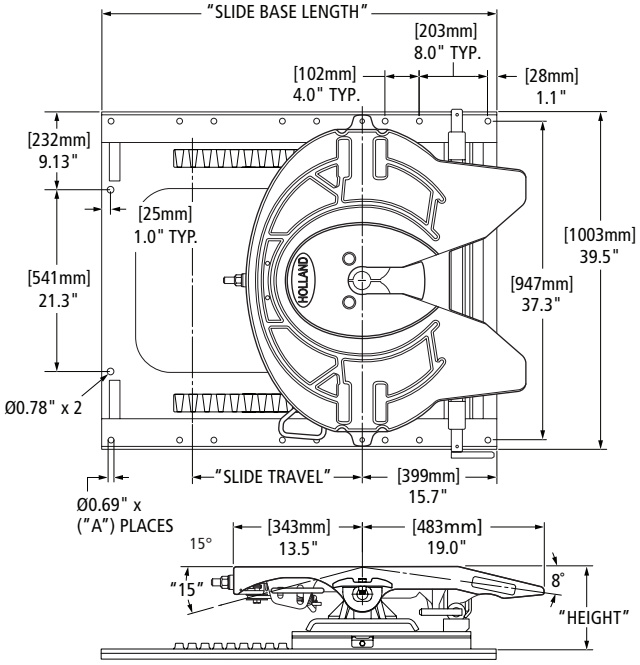

STANDARD OPTION CODES Replaces the Underscore (__) on the new and legacy part number.	
NUMBER CODE	**DESCRIPTION**
00 / Blank	Standard, No Other Options
34	Manual Secondary, Standard No-Tilt
44	Weight Saver Cutout, Standard No-Tilt
86	Air Release, Aftermarket Installations, Air Control Modules Included, Left-Hand Only
0G	Plunger Dip Control
1B	Standard, No-Tilt, Air Release
EL	Electronic Lock Indicator

PART NUMBER◊	REPLACED BY ILS PART NUMBER◊	SLIDE BRACKET TYPE	HEIGHT	SLIDE TRAVEL IN [MM]	SLIDE BASE LENGTH IN [MM]	A # OF HOLES	REPLACEMENT SLIDE BASE AND BRACKET**	REPLACEMENT SLIDE BASE**	REPLACEMENT BRACKET **	FW WEIGHT LBS [KG]
FW35-8401T2L__	FW35N906YL00	Air Release	8.6" [218]	13.8" [351]	42.2" [1072]	16	XA-8401-T2	XA-07871-2	XA-7401	550.00 [249.48]
FW35-8401T3L__	FW35N918YL00			19.9" [505]	46.2" [1173]	16	XA-8401-T3	XA-07871-3		563.00 [255.37]
FW35-8401T4L__	FW35N930YL00			32.1" [815]	58.2" [1478]	20	XA-8401-T4	XA-07871-4		603.00 [273.52]
FW35-8401T5L__	FW35N942YL00			44.4" [1128]	70.2" [1783]	24	XA-8401-T5	XA-07871-5		643.00 [291.66]
FW35-8409T2L__	—		10.1" [257]	13.8" [351]	42.2" [1072]	16	XA-8409-T2	XA-07871-2	XA-7409	577.00 [261.72]
FW35-8409T3L__	—			19.9" [505]	46.2" [1173]	16	XA-8409-T3	XA-07871-3		591.00 [268.07]
FW35-8409T4L__	—			32.1" [815]	58.2" [1478]	20	XA-8409-T4	XA-07871-4		631.00 [286.22]
FW35-8409T5L__	—			44.4" [1128]	70.2" [1783]	24	XA-8409-T5	XA-07871-5		671.00 [304.36]
FW35-8411T2L__	—	Manual Release	8.6" [218]	13.8" [351]	42.2" [1072]	16	XA-8411-T2	XA-07871-2	XA-7411	550.00 [249.48]
FW35-8411T3L__	—			19.9" [505]	46.2" [1173]	16	XA-8411-T3	XA-07871-3		563.00 [255.37]
FW35-8411T4L__	—			32.1" [815]	58.2" [1478]	20	XA-8411-T4	XA-07871-4		603.00 [273.52]
FW35-8411T5L__	—			44.4" [1128]	70.2" [1783]	24	XA-8411-T5	XA-07871-5		643.00 [291.66]
FW35-8419T2L__	—		10.1" [257]	13.8" [351]	42.2" [1072]	16	XA-8419-T2	XA-07871-2	XA-7419	577.00 [261.72]
FW35-8419T3L__	—			19.9" [505]	46.2" [1173]	16	XA-8419-T3	XA-07871-3		591.00 [268.07]
FW35-8419T4L__	—			32.1" [815]	58.2" [1478]	20	XA-8419-T4	XA-07871-4		631.00 [286.22]
FW35-8419T5L06	—			44.4" [1128]	70.2" [1783]	24	XA-8419-T5	XA-07871-5		671.00 [304.36]

◊ For right-hand release fifth wheels, change "L" to "R" in part number.
** See bracket section for more information.

NOTE: See Accessories Section for No-Tilt Kits. Not included in Replacement Bracket part number.

XL-FW10081PM-en-US Rev D 2016-03-01 Amendments and errors reserved. © SAF-HOLLAND, Inc.

FW35 Sliding Traditional No Tilt Inboard for Angle Mount

Also Available With Angle Later In This Section.

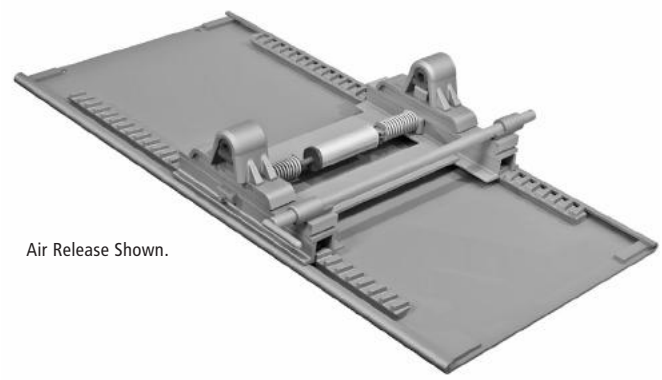

Air Release Shown.

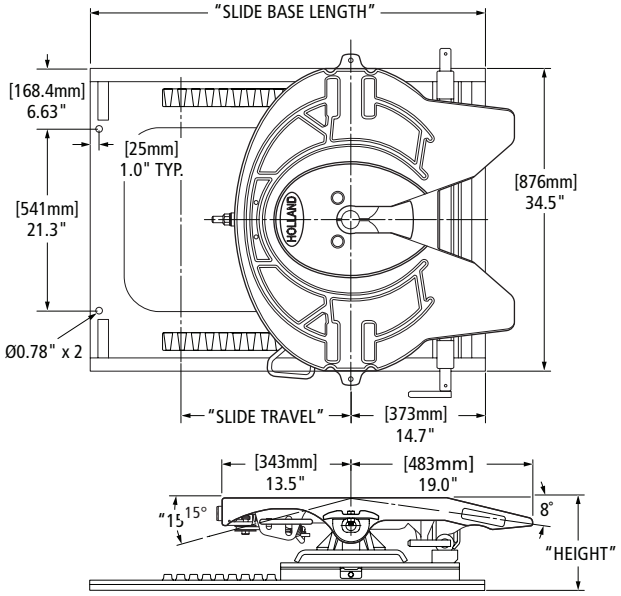

PART NUMBER◊	REPLACED BY ILS PART NUMBER◊	SLIDE BRACKET TYPE	HEIGHT IN [MM]	SLIDE TRAVEL IN [MM]	SLIDE BASE LENGTH IN [MM]	REPLACEMENT SLIDE BASE AND BRACKET**	REPLACEMENT SLIDE BASE**	REPLACEMENT BRACKET **	FW WEIGHT LBS [KG]
FW35-7401X2L06	FW35N906WL00	Air Release	8.6" [218]	13.9" [353]	38.9" [988]	XA-7401-X2-11	XA-0751-2	XA-7401	509.00 [230.88]
FW35-7401X3L06	FW35N918WL00			20.0" [508]	45.0" [1143]	XA-7401-X3-11	XA-0751-3		524.00 [237.68]
FW35-7401X4L06	FW35N930WL00			32.2" [818]	57.2" [1452]	XA-7401-X4-11	XA-0751-4		496.00 [224.98]
FW35-7401X5L06	FW35N942WL00			44.4" [1128]	69.5" [1765]	XA-7401-X5-11	XA-0751-5		524.00 [237.68]
FW35-7401X6L06	—			56.7" [1440]	82.0" [2082]	XA-7401-X6-11	XA-0751-6		499.00 [226.34]
FW35-7409X2L06	—		10.1" [257]	13.9" [353]	38.9" [988]]	XA-7409-X2-11	XA-0751-2	XA-7409	586.00 [265.81]
FW35-7409X3L06	—			20.0" [508]	45.0" [1143]	XA-7409-X3-11	XA-0751-3		604.00 [273.97]
FW35-7409X4L06	—			32.2" [818]	57.2" [1452]	XA-7409-X4-11	XA-0751-4		645.00 [292.57]
FW35-7409X5L06	—			44.4" [1128]	69.5" [1765]	XA-7409-X5-11	XA-0751-5		701.00 [317.97]
FW35-7409X6L06	—			56.7" [1440]	82.0" [2082]	XA-7409-X6-11	XA-0751-6		751.00 [340.65]
FW35-7411X2L06	—	Manual Release	8.6" [218]	13.9" [353]	38.9" [988]	XA-7411-X2-11	XA-0751-2	XA-7411	509.00 [230.88]
FW35-7411X3L06	—			20.0" [508]	45.0" [1143]	XA-7411-X3-11	XA-0751-3		524.00 [237.68]
FW35-7411X4L06	—			32.2" [818]	57.2" [1452]	XA-7411-X4-11	XA-0751-4		496.00 [224.98]
FW35-7411X5L06	—			44.4" [1128]	69.5" [1765]	XA-7411-X5-11	XA-0751-5		524.00 [237.68]
FW35-7411X6L06	—			56.7" [1440]	82.0" [2082]	XA-7411-X6-11	XA-0751-6		499.00 [226.34]
FW35-7419X2L06	—		10.1" [257]	13.9" [353]	38.9" [988]	XA-7419-X2-11	XA-0751-2	XA-7419	586.00 [265.81]
FW35-7419X3L06	—			20.0" [508]	45.0" [1143]	XA-7419-X3-11	XA-0751-3		604.00 [273.97]
FW35-7419X4L06	—			32.2" [818]	57.2" [1452]	XA-7419-X4-11	XA-0751-4		645.00 [292.57]
FW35-7419X5L06	—			44.4" [1128]	69.5" [1765]	XA-7419-X5-11	XA-0751-5		701.00 [317.97]
FW35-7419X6L06	—			56.7" [1440]	82.0" [2082]	XA-7419-X6-11	XA-0751-6		751.00 [340.65]

◊ For right-hand release fifth wheels, change "L" to "R" in part number.
** See bracket section for more information.

NOTE: See Accessories Section for No-Tilt Kits. Not included in Replacement Bracket part number.

 Amendments and errors reserved. © SAF-HOLLAND, Inc.

FW35 Stationary Kompensator Outboard Plate Mount



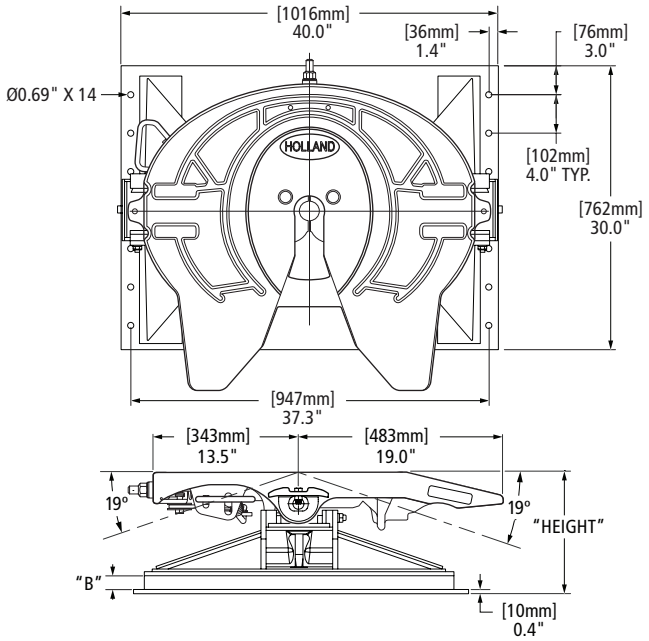

STANDARD OPTION CODES Replaces the Underscore (__) on the new and legacy part number.	
NUMBER CODE	DESCRIPTION
Blank	Standard, No Other Options
02	Manual Secondary Lock
13	Kompensator Dust Covers
14	Grease Fittings in Top Plate, Four (4) Fittings
15	Kompensator Dust Covers and Grease Fittings in Top Plate
19	Komp Lockouts
24	Drilled and Tapped for Auto Lube
27	Manual Secondary Lock and Komp Lockouts
83	Drilled and Tapped for Auto Lube and Komp Lockouts
E9	Electronic Lock Indicator and Komp Lockouts
EL	Electronic Lock Indicator

PART NUMBER◊	HEIGHT IN [MM]	B	REPLACEMENT BRACKET**	FW WEIGHT LBS [KG]
FW35-7726XL__	12.9" [328]	3.0" [76]	XA-40-7726	649.00 [294.38]
FW35-7727XL__	11.9" [302]	2.0" [51]	XA-40-7727	640.00 [290.30]
FW35-7729XL__	9.9" [251]	— +	XA-40-7729	575.00 [260.82]

◊ For right-hand release fifth wheels, change "L" to "R" in part number.
+ Kompensator frame is mounted directly to plate, and extends 1.17" below bottom of plate.
** See bracket section for more information.

FW35 Stationary Kompensator Inboard Plate Mount for Angle Mounting



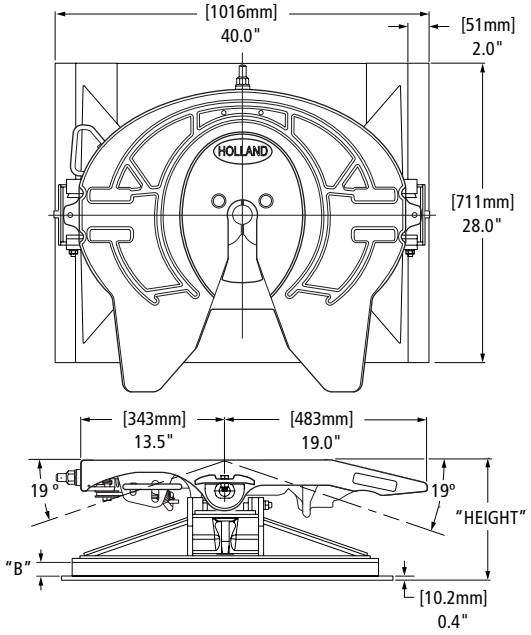

STANDARD OPTION CODES Replaces the Underscore (__) on the new and legacy part number.	
NUMBER CODE	DESCRIPTION
Blank	Standard, No Other Options
02	Manual Secondary Lock
13	Kompensator Dust Covers
14	Grease Fittings in Top Plate, Four (4) Fittings
15	Kompensator Dust Covers and Grease Fittings in Top Plate
19	Komp Lockouts
24	Drilled and Tapped for Auto Lube
27	Manual Secondary Lock and Komp Lockouts
83	Drilled and Tapped for Auto Lube and Komp Lockouts
E9	Electronic Lock Indicator and Komp Lockouts
EL	Electronic Lock Indicator

PART NUMBER◊	HEIGHT IN [MM]	B	REPLACEMENT BRACKET**	FW WEIGHT LBS [KG]
FW35-7721XL__	12.9" [328]	3.0" [76]	XA-40-7724	643.00 [291.66]
FW35-7722XL__	11.9" [302]	2.0" [51]	XA-40-7722	632.00 [286.67]
FW35-7723XL__	9.9" [251]	— +	XA-40-7723	657.00 [298.01]

◊ For right-hand release fifth wheels, change "L" to "R" in part number.
+ Kompensator frame is mounted directly to plate, and extends 1.17" below bottom of plate.
** See bracket section for more information.

XL-FW10081PM-en-US Rev D 2016-03-01 Amendments and errors reserved. © SAF-HOLLAND, Inc.

FW35 Stationary Kompensator Inboard for Angle Mount

Also Available With Angle Later In This Section.



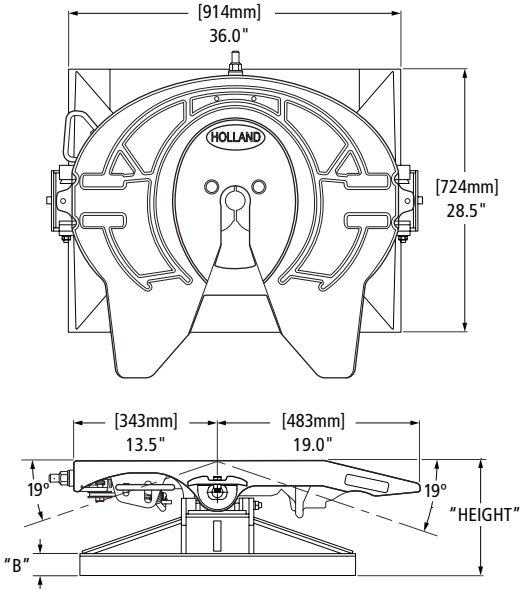

STANDARD OPTION CODES Replaces the Underscore (__) on the new and legacy part number.	
NUMBER CODE	DESCRIPTION
Blank	Standard, No Other Options
02	Manual Secondary Lock
13	Kompensator Dust Covers
14	Grease Fittings in Top Plate, Four (4) Fittings
15	Kompensator Dust Covers and Grease Fittings in Top Plate
19	Komp Lockouts
24	Drilled and Tapped for Auto Lube
80	Air Release, OEM Replacement, Left-Hand Only
82	Drilled and Tapped with Cross Drilled Hole
86	Air Release, Aftermarket Installations, Air Control Modules Included, Left-Hand Only
1A	Manual Secondary Lock and Air Release

PART NUMBER◊	HEIGHT IN [MM]	B	REPLACEMENT BRACKET**	FW WEIGHT LBS [KG]
FW35-7701XL__	12.5" [318]	3.0" [76]	XA-40-7701	523.00 [237.23]
FW35-7702XL__	11.5" [292]	2.0" [51]	XA-40-7702	513.00 [232.69]
FW35-7703XL__	9.5" [241]	— +	XA-40-7703	469.00 [212.73]

◊ For right-hand release fifth wheels, change "L" to "R" in part number.
+ Kompensator frame is mounted directly to plate, and extends 1.17" below bottom of plate.
** See bracket section for more information.

FW35 Sliding Kompensator Inboard for Angle Mount



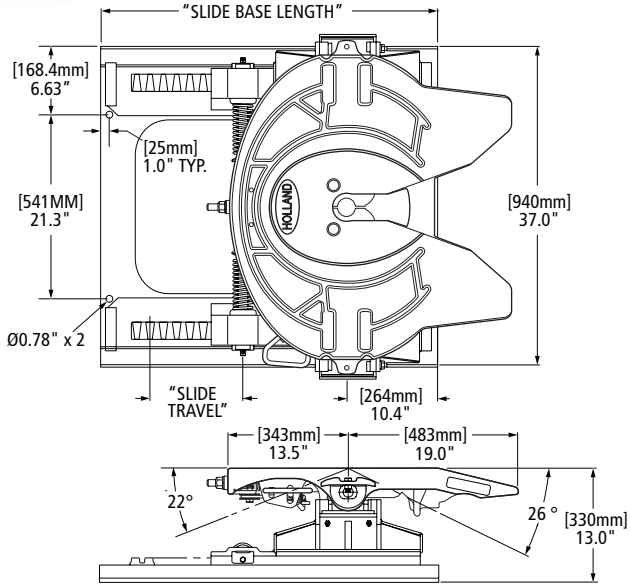

STANDARD OPTION CODES Replaces the Underscore (__) on the new and legacy part number.	
NUMBER CODE	DESCRIPTION
Blank	Standard, No Other Options
02	Manual Secondary Lock
19	Komp Lockouts
24	Drilled and Tapped for Auto Lube
27	Manual Secondary Lock and Komp Lockouts
80	Air Release, OEM Replacement, Left-Hand Only
83	Drilled and Tapped for Auto Lube and Komp Lockouts

PART NUMBER◊	SLIDE TRAVEL IN [MM]	SLIDE BASE LENGTH IN [MM]	REPLACEMENT SLIDE BASE** IN [MM]	REPLACEMENT BRACKET**	FW WEIGHT LBS [KG]
FW35-7201X1L__	10.7" [272]	38.9" [988]	XA-0284-1	XA-7201	752.00 [341.10]
FW35-7201X2L__	16.8" [427]	45.0" [1143]	XA-0284-2		771.00 [349.72]
FW35-7201X3L__	24.5" [622]	52.6" [1336]	XA-0284-3A		828.00 [375.57]
FW35-7201X4L__	41.3" [1049]	69.5" [1765]	XA-0284-4		912.00 [413.68]
FW35-7201X5L__	53.6" [1361]	82.0" [2082]	XA-0284-5		986.00 [447.24]
FW35-7201X6L__	65.8" [1671]	94.0" [2387]	XA-0284-6		1051.00 [476.73]

◊ For right-hand release fifth wheels, change "L" to "R" in part number.
** See bracket section for more information.

 Amendments and errors reserved. © SAF-HOLLAND, Inc.

FW35 Stationary Brackets with Angle Mount



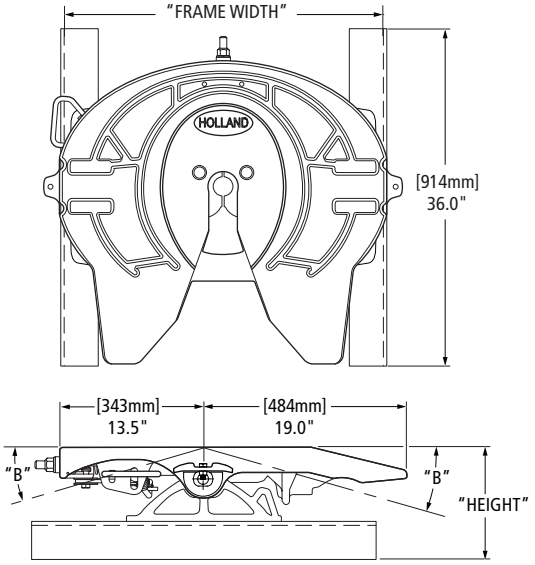

Frame width "A-G": .38" x 4" x 4" angle dimensions
"H-N": .38" x 4" x 6" angle dimensions
See option chart for other options.

STANDARD OPTION CODES Replaces the Underscore (__) on the new and legacy part number.	
NUMBER CODE	DESCRIPTION
00 / Blank	Standard, No Other Options
02	Manual Secondary Lock
14	Grease Fittings in Top Plate, Four (4) Fittings
21	.38" x 5" x 5" Angle
24	Drilled and Tapped for Auto Lube
28	Dolly Handle
45	Manual Secondary Lock and .38" x 5" x 5" Angle
51	.38" x 4" x 6" Angle
80	Air Release, OEM Replacement, Left-Hand Only
86	Air Release, New installations, Left-Hand Only
1A	Manual Secondary Lock and Air Release
EL	Electronic Lock Indicator

FW PART NUMBER CAST BRACKET◊	FW PART NUMBER FABRICATED*◊	HEIGHT IN [MM]	B	REPLACEMENT BRACKETS**	FW WEIGHT LBS [KG]
FW35W600GL__	FW35-7814GL__	5.6" [142]	8°	RK-W600-G	329.00 [149.23]
FW35W700GL__	FW35-7813GL__	6.6" [168]	11°	RK-W700-G	334.00 [151.50]
FW35W800GL__	FW35-7812GL__	7.6" [193]	14°	RK-W800-G	339.00 [153.77]
FW35W900GL__	FW35-7811GL__	8.6" [218]	17°	RK-W900-G	344.00 [156.04]
—	FW35-7553GL__	10.5" [267]	15°	XA-7553-G	339.00 [153.77]
—	FW35-7552GL__	10.5" [318]	15°	XA-7552-G	375.00 [170.10]
—	FW35-7551GL__	12.5" [318]	15°	XA-7551-G	382.00 [173.27]

◊ For right-hand release fifth wheels, change "L" to "R" in part number.
* No longer available if cast version exists.
** See bracket section for more information.

FRAME WIDTH CODE CHART					
CODE	FRAME WIDTH IN [MM]	CODE	FRAME WIDTH IN [MM]	CODE	FRAME WIDTH IN [MM]
A	33.25" [845]	F	33.88" [861]	L	34.50" [876]
B	33.38" [848]	**G†**	**34.00" [864]**	M	34.62" [879]
C	33.50" [851]	H	34.12" [867]	N	34.75" [883]
D	33.62" [854]	J	34.25" [870]		
E	33.75" [857]	K	34.38" [873]		

† Standard

XL-FW10081PM-en-US Rev D 2016-03-01 Amendments and errors reserved. © SAF-HOLLAND, Inc.

FW35 Stationary No Tilt Inboard with Angle Mount

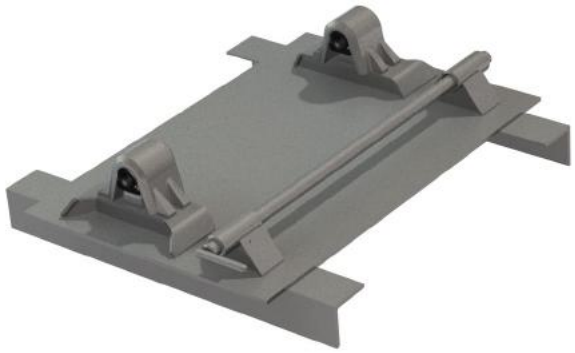

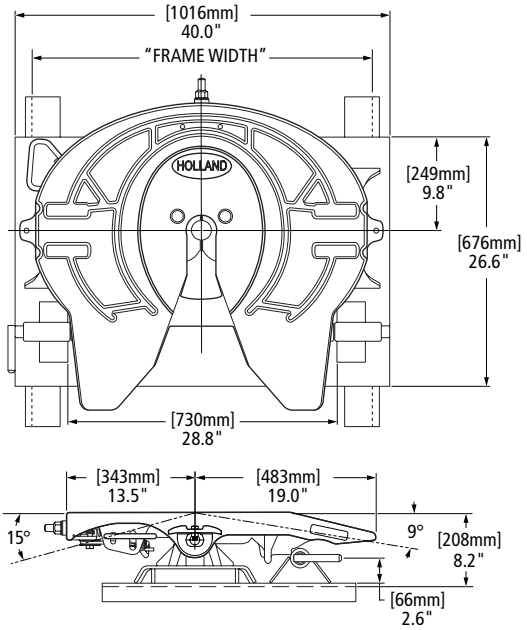

"Angle size" see chart.

ILS FW PART NUMBER◊	FW PART NUMBER◊	FRAME WIDTH IN [MM]	ANGLE SIZE	REPLACEMENT BRACKET**	FW WEIGHT LBS [KG]
FW35N800AL06	FW35-8922AL06	33.25" [845]	4" x 4" x .38"	XA-08408-A	506.00 [229.52]
FW35N800BL06	FW35-8922BL06	33.38" [848]		XA-08408-B	507.00 [229.97]
FW35N800CL06	FW35-8922CL06	33.50" [851]		XA-08408-C	507.00 [229.97]
FW35N800DL06	FW35-8922DL06	33.62" [854]		XA-08408-D	508.00 [230.42]
FW35N800EL06	FW35-8922EL06	33.75" [857]		XA-08408-E	508.00 [230.42]
FW35N800FL06	FW35-8922FL06	33.88" [861]		XA-08408-F	509.00 [230.88]
FW35N800GL06	FW35-8922GL06	**34.00" [864]**		XA-08408-G	509.00 [230.88]
FW35N800HL06	FW35-8922HL06	34.12" [867]		XA-08408-H	510.00 [231.33]
FW35N800JL06	FW35-8922JL06	34.25" [870]		XA-08408-J	510.00 [231.33]
FW35N800KL06	FW35-8922KL06	34.38" [873]		XA-08408-K	511.00 [231.79]
FW35N800LL06	FW35-8922LL06	34.50" [876]		XA-08408-L	512.00 [232.24]
FW35N800AL65	FW35-8922AL65	33.25" [845]	4" x 4" x .31"	XA-08408-A-65	495.00 [224.53]
FW35N800BL65	FW35-8922BL65	33.38" [848]		XA-08408-B-65	496.00 [224.98]
FW35N800CL65	FW35-8922CL65	33.50" [851]		XA-08408-C-65	496.00 [224.98]
FW35N800DL65	FW35-8922DL65	33.62" [854]		XA-08408-D-65	497.00 [225.44]
FW35N800EL65	FW35-8922EL65	33.75" [857]		XA-08408-E-65	497.00 [225.44]
FW35N800FL65	FW35-8922FL65	33.88" [861]		XA-08408-F-65	498.00 [225.89]
FW35N800GL65	FW35-8922GL65	**34.00" [864]**		XA-08408-G-65	498.00 [225.89]
FW35N800HL65	FW35-8922HL65	34.12" [867]		XA-08408-H-65	499.00 [226.34]
FW35N800JL65	FW35-8922JL65	34.25" [870]		XA-08408-J-65	499.00 [226.34]
FW35N800KL65	FW35-8922KL65	34.38" [873]		XA-08408-K-65	500.00 [226.80]
FW35N800LL65	FW35-8922LL65	34.50" [876]		XA-08408-L-65	500.00 [226.80]

◊ For right-hand release fifth wheels, change "L" to "R" in part number.
** See bracket section for more information.

NOTE: See Accessories Section for No-Tilt Kits. Not included in Replacement Bracket part number.

 Amendments and errors reserved. © SAF-HOLLAND, Inc.

FW35 Sliding ILS Inboard with Angle Mount

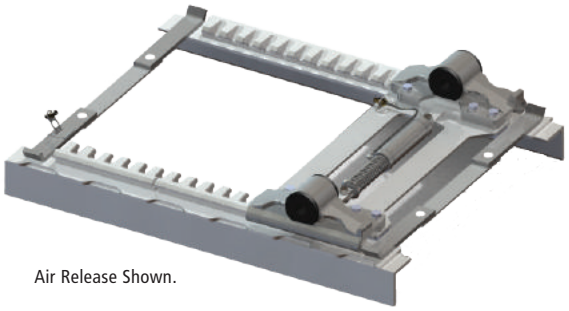

Air Release Shown.

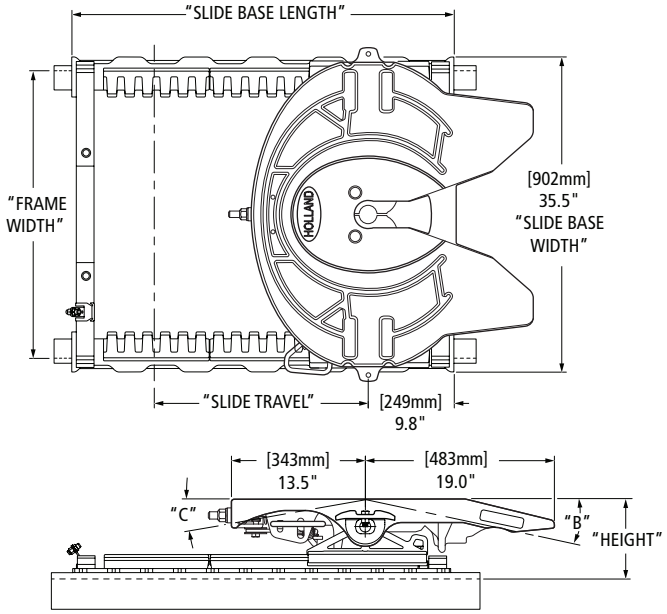

FRAME WIDTH CODE CHART					
CODE	FRAME WIDTH IN [MM]	CODE	FRAME WIDTH IN [MM]	CODE	FRAME WIDTH IN [MM]
A	33.25" [845]	F	33.88" [861]	L	34.50" [876]
B	33.38" [848]	G†	**34.00" [864]**	M	34.62" [879]
C	33.50" [851]	H	34.12" [867]	N	34.75" [883]
D	33.62" [854]	J	34.25" [870]	P	34.88" [886]
E	33.75" [857]	K	34.38" [873]	Q	35.00" [889]

† Standard

Frame width "A-C": .38" x 3" x 4" angle dimensions
"D-K": .38" x 3.5" x 4" angle dimensions
"K-Q": .38" x 4" x 4" angle dimensions
See option codes for other options.

STANDARD OPTION CODES Replaces the Underscore (__) on the new and legacy part number.	
NUMBER CODE	DESCRIPTION
00 / Blank	Standard, No Other Option
02	Manual Secondary Lock
11	Weight Saver Cutout
14	Grease Fittings in Top Plate, Four (4) Fittings
24	Drilled and Tapped for Auto Lube
21	.38" x 5" x 5" Angle
30	Manual Secondary Lock and Weight Saver Cutout
51	.38" x 4" x 6" Angle
55	Drilled and Tapped for Auto Lube and Weight Saver Cutout
64	Weight Saver Cutout and .38" x 5" x 5" Angle
65	Angle 4" x 4" x .31"
67	Weight Saver Cutout and .38" x 4" x 6" Angle

STANDARD OPTION CODES Replaces the Underscore (__) on the new and legacy part number.	
NUMBER CODE	DESCRIPTION
80	Air Release, OEM Replacement, Left-Hand Only
82	Drilled and Tapped with Cross Drilled Hole
86	Air Release, Aftermarket Installations, Air Control Modules Included, Left-Hand Only
88	Manual Secondary Lock and Weight Saver Cutout and Air Release, OEM Replacement, Left-Hand Only
90	Weight Saver Cutout and Air Release, OEM Replacement, Left-Hand Only
95	Weight Saver Cutout and Air Release, Aftermarket Installations, Air Control Modules Included, Left-Hand Only
0C	Earless Top Plate
0D	Weight Saver Cutout and Earless Top Plate
0F	Manual Secondary Lock and Earless Top Plate
0U	Drilled and Tapped for Auto Lube and Air Release, OEM Replacement Left-Hand Only

FW PART NUMBER◊	TRAD. SLIDER PART NUMBER (AIR RELEASE)*◊	TRAD. SLIDER PART NUMBER (MANUAL RELEASE)*◊	HEIGHT IN [MM]	SLIDE TRAVEL IN [MM]	SLIDE BASE LENGTH IN [MM]	B	C	REPLACEMENT SLIDE BASE AND BRACKET**	REPLACEMENT SLIDE BASE **	REPLACEMENT BRACKET**	FW WEIGHT LBS [KG]
FW35B712GL__	FW35-7003G1L__	FW35-7013G1L__	6.7" [170]	12" [305]	31" [787]	8°	8°	XA-B712G	XA-B12G	RK-10689-1	408.00 [185.07]
FW35B724GL__	FW35-7003G2L__	FW35-7013G2L__		24" [610]	43" [1092]			XA-B724G	XA-B24G	RK-10689-1	435.00 [197.31]
FW35B736GL__	FW35-7003G4L__	FW35-7013G4L__		36" [915]	55" [1397]			XA-B736G	XA-B36G	RK-10689-1	464.00 [210.47]
FW35B748GL__	FW35-7003G5L__	FW35-7013G5L__		48" [1219]	67" [1702]			XA-B748G	XA-B48G	RK-10689-1	491.00 [222.71]
FW35B812GL__	FW35-7002G1L__	FW35-7012G1L__	7.7" [196]	12" [305]	31" [787]	12°	10°	XA-B812G	XA-B12G	RK-10689-2	413.00 [187.33]
FW35B824GL__	FW35-7002G2L__	FW35-7012G2L__		24" [610]	43" [1092]			XA-B824G	XA-B24G	RK-10689-2	440.00 [199.58]
FW35B836GL__	FW35-7002G4L__	FW35-7012G4L__		36" [915]	55" [1397]			XA-B836G	XA-B36G	RK-10689-2	470.00 [213.19]
FW35B848GL__	FW35-7002G5L__	FW35-7012G5L__		48" [1219]	67" [1702]			XA-B848G	XA-B48G	RK-10689-2	496.00 [224.98]
FW35B912GL__	FW35-7001G1L__	FW35-7011G1L__	8.7" [221]	12" [305]	31" [787]	15°	12°	XA-B912G	XA-B12G	RK-10689-3	412.00 [186.88]
FW35B924GL__	FW35-7001G2L__	FW35-7011G2L__		24" [610]	43" [1092]			XA-B924G	XA-B24G	RK-10689-3	440.00 [199.58]
FW35B936GL__	FW35-7001G4L__	FW35-7011G4L__		36" [915]	55" [1397]			XA-B936G	XA-B36G	RK-10689-3	468.00 [212.28]
FW35B948GL__	FW35-7001G5L__	FW35-7011G5L__		48" [1219]	67" [1702]			XA-B948G	XA-B48G	RK-10689-3	496.00 [224.98]

◊ For right-hand release fifth wheels, change "L" to "R" in part number.
* No longer available if cast version exists.
** See bracket section for more information.

XL-FW10081PM-en-US Rev D 2016-03-01 Amendments and errors reserved. © SAF-HOLLAND, Inc.

FW35 Sliding Traditional No Tilt Inboard with Angle Mount



Air Release Shown.

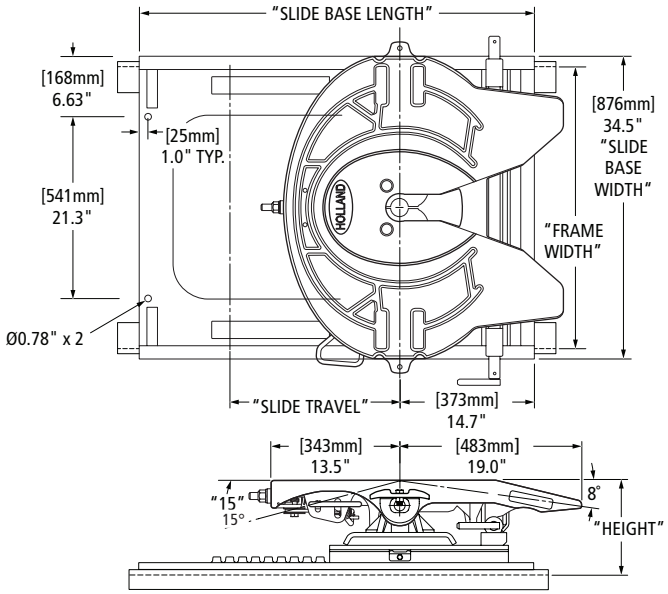

Frame width "A-Q": .38" x 4" x 4" angle dimensions
See option codes for other options.

STANDARD OPTION CODES Replaces the Underscore (__) on the new and legacy part number.	
NUMBER CODE	DESCRIPTION
06	Standard No-Tilt, No Other Options
44	Weight Saver Cutout and No-Tilt
51	.38" x 4" x 6" Angle
69	Weight Saver Cutout, No-Tilt and .38" x 5" x 5" Angle

FRAME WIDTH CODE CHART					
CODE	FRAME WIDTH IN [MM]	CODE	FRAME WIDTH IN [MM]	CODE	FRAME WIDTH IN [MM]
A	33.25" [845]	F	33.88" [861]	M	34.62" [879]
B	33.38" [848]	**G†**	**34.00" [864]**	N	34.75" [883]
C	33.50" [851]	H	34.12" [867]	P	34.88" [886]
D	33.62" [854]	K	34.38" [873]	Q	35.00" [889]
E	33.75" [857]	L	34.50" [876]		

† Standard

PART NUMBER◊	SLIDE BRACKET TYPE	HEIGHT IN [MM]	SLIDE TRAVEL IN [MM]	SLIDE BASE LENGTH IN [MM]	REPLACEMENT SLIDE BASE AND BRACKET**	REPLACEMENT SLIDE BASE**	REPLACEMENT BRACKET **	FW WEIGHT LBS [KG]
FW35-7401G2L06	AIR RELEASE	9.0" [229]	13.9" [353]	38.9" [988]	XA-7401-G2-__	XA-0752-G2-__	XA-7401	620.00 [281.23]
FW35-7401G3L06			20.0" [508]	45.0" [1143]	XA-7401-G3-__	XA-0752-G3-__		658.00 [298.46]
FW35-7401G4L06			32.2" [818]	57.2" [1452]	XA-7401-G4-__	XA-0752-G4-__		730.00 [331.12]
FW35-7401G5L06			44.4" [1128]	69.5" [1765]	XA-7401-G5-__	XA-0752-G5-__		795.00 [360.61]
FW35-7401G6L06			56.7" [1440]	82.0" [2082]	XA-7401-G6-__	XA-0752-G6-__		866.00 [392.81]
FW35-7409G2L06		10.9" [277]	13.9" [353]	38.9" [988]	XA-7409-G2-__	XA-0752-G2-__	XA-7409	628.00 [284.86]
FW35-7409G3L06			20.0" [508]	45.0" [1143]	XA-7409-G3-__	XA-0752-G3-__		666.00 [302.09]
FW35-7409G4L06			32.2" [818]	57.2" [1452]	XA-7409-G4-__	XA-0752-G4-__		738.00 [334.75]
FW35-7409G5L06			44.4" [1128]	69.5" [1765]	XA-7409-G5-__	XA-0752-G5-__		803.00 [364.23]
FW35-7409G6L06			56.7" [1440]	82.0" [2082]	XA-7409-G6-__	XA-0752-G6-__		874.00 [396.44]
FW35-7411G2L06	MANUAL RELEASE	9.0" [229]	13.9" [353]	38.9" [988]	XA-7411-G2-__	XA-0752-G2-__	XA-7411	625.00 [283.50]
FW35-7411G3L06			20.0" [508]	45.0" [1143]	XA-7411-G3-__	XA-0752-G3-__		663.00 [300.73]
FW35-7411G4L06			32.2" [818]	57.2" [1452]	XA-7411-G4-__	XA-0752-G4-__		735.00 [333.39]
FW35-7411G5L06			44.4" [1128]	69.5" [1765]	XA-7411-G5-__	XA-0752-G5-__		800.00 [362.87]
FW35-7411G6L06			56.7" [1440]	82.0" [2082]	XA-7411-G6-__	XA-0752-G6-__		871.00 [395.08]
FW35-7419G2L06		10.9"	13.9" [353]	38.9" [988]	XA-7419-G2-__	XA-0752-G2-__	XA-7419	633.00 [287.12]
FW35-7419G3L06			20.0" [508]	45.0" [1143]	XA-7419-G3-__	XA-0752-G3-__		671.00 [304.36]
FW35-7419G4L06			32.2" [818	57.2" [1452]	XA-7419-G4-__	XA-0752-G4-__		743.00 [337.02]
FW35-7419G5L06			44.4" [1128]	69.5" [1765]	XA-7419-G5-__	XA-0752-G5-__		808.00 [366.50]
FW35-7419G6L06			56.7" [1440]	82.0" [2082]	XA-7419-G6-__	XA-0752-G6-__		879.00 [398.71]

◊ For right-hand release fifth wheels, change "L" to "R" in part number.
** See bracket section for more information.

NOTE: See Accessories Section for No-Tilt Kits. Not included in Replacement Bracket part number.

 Amendments and errors reserved. © SAF-HOLLAND, Inc.

SAF-HOLLAND Group

FW35 Sliding Traditional Inboard with Angle Mount

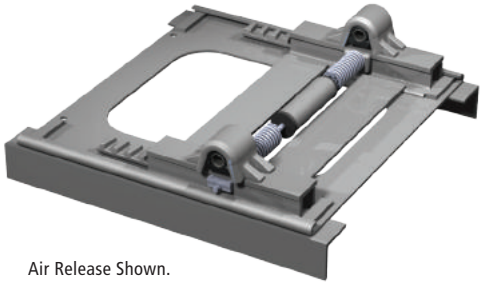

Air Release Shown.

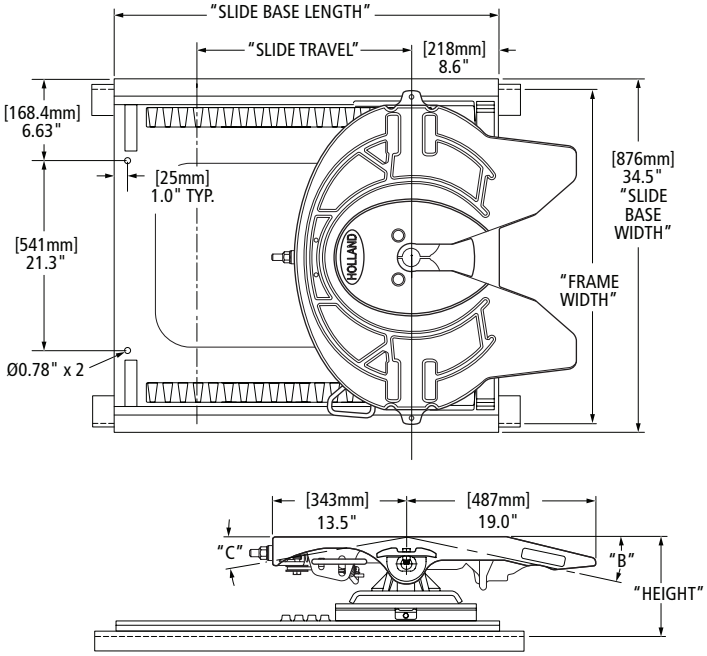

FRAME WIDTH CODE CHART					
CODE	FRAME WIDTH IN [MM]	CODE	FRAME WIDTH IN [MM]	CODE	FRAME WIDTH
A	33.25" [845]	F	33.88" [861]	M	34.62" [879]
B	33.38" [848]	G†	**34.00" [864]**	N	34.75" [883]
C	33.50" [851]	H	34.12" [867]	P	34.88" [886]
D	33.62" [854]	K	34.38" [873]	Q	35.00" [889]
E	33.75" [857]	L	34.50" [876]		

† Standard

Frame Width "A-L": .38" x 4" x 4" angle dimensions
"M-Q": .38" x 5" x 5" angle dimensions (Option Code 21)
See option codes for other options.

STANDARD OPTION CODES Replaces the Underscore (__) on the new and legacy part number.	
NUMBER CODE	DESCRIPTION
00 / Blank	Standard, No Other Options
02	Manual Secondary Lock
11	Weight Saver Cutout
14	Grease Fittings in Top Plate, Four (4) Fittings
21	.38" x 5" x 5" Angle
24	Drilled and Tapped for Auto Lube
28	Dolly Handle
30	Manual Secondary Lock and Weight Saver Cutout
51	.38" x 4" x 6" Angle
55	Weight Saver Cutout and Drilled and Tapped for Auto Lube
64	Weight Saver Cutout and .38" x 5" x 5" Angle
80	Air Release, OEM Replacement Left-Hand Only

STANDARD OPTION CODES Replaces the Underscore (__) on the new and legacy part number.	
NUMBER CODE	DESCRIPTION
86	Air Release, Aftermarket Installations, Air Control Modules Included Left-Hand Only
88	Manual Secondary Lock, Weight Saver Cutout and Air Release OEM Replacement Left-Hand Only
90	Weight Saver Cutout and Air Release, OEM Replacement Left-Hand Only
95	Weight Saver Cutout and Air Release, Aftermarket Installations, Air Control Modules Included Left-Hand Only
96	Lincoln Lube System and Weight Saver Cutout
0C	Earless Top Plate
0D	Earless Top Plate and Weight Saver Cutout
0F	Earless Top Plate and Manual Secondary Lock
0U	Drilled and Tapped for Auto Lub and Air Release, OEM Replacement Left-Hand Only
1A	Manual Secondary Lock and Air Release

LEGACY FW PART NUMBER*◊	REPLACED BY ILS FW PART NUMBER◊	SLIDE BRACKET TYPE	HEIGHT IN [MM]	SLIDE TRAVEL IN [MM]	SLIDE BASE LENGTH IN [MM]	B	C	REPLACEMENT SLIDE BASE**	REPLACEMENT BRACKET**	FW WEIGHT LBS [KG]
FW35-7003G1L__	FW35B712GL00	AIR RELEASE	7.1" [180]	10.7" [272]	38.9" [988]	11°	7°	XA-0753-G1-__	XA-7003	531.00 [240.86]
FW35-7003G2L__	FW35B724GL00			16.8" [427]	45.0" [1143]			XA-0753-G2-__		555.00 [251.74]
FW35-7003G3L__	FW35B724GL00			24.5" [622]	52.6" [1336]			XA-0753-G3-__		588.00 [266.71]
FW35-7003G4L__	FW35B736GL00			41.3" [1049]	69.5" [1765]			XA-0753-G4-__		646.00 [293.02]
FW35-7003G5L__	FW35B748GL00			53.6" [1361]	82.0" [2082]			XA-0753-G5-__		727.00 [329.76]
FW35-7003G6L__	—			65.8" [1671]	94.0" [2387]			XA-0753-G6-__		802.00 [363.78]
FW35-7002G1L__	FW35B812GL00		8.1" [206]	12.2" [310]	32.8" [833]	14°	19°	XA-0753-G1-__	XA-7002	524.00 [237.68]
FW35-7002G2L__	FW35B824GL00			18.4" [467]	38.9" [988]			XA-0753-G2-__		573.00 [259.91]
FW35-7002G3L__	FW35B824GL00			24.5" [622]	45.0" [1143]			XA-0753-G3-__		595.00 [269.89]

◊ For right-hand release fifth wheels, change "L" to "R" in part number.
* No longer available if cast version exists.
** See bracket section for more information.

XL-FW10081PM-en-US Rev D 2016-03-01 Amendments and errors reserved. © SAF-HOLLAND, Inc.

LEGACY FW PART NUMBER*◊	REPLACED BY ILS FW PART NUMBER◊	SLIDE BRACKET TYPE	HEIGHT IN [MM]	SLIDE TRAVEL IN [MM]	SLIDE BASE LENGTH IN [MM]	B	C	REPLACEMENT SLIDE BASE**	REPLACEMENT BRACKET**	FW WEIGHT LBS [KG]
FW35-7002G4L__	FW35B836GL00	AIR RELEASE	8.1" [206]	36.7" [932]	57.2" [1452]	14°	19°	XA-0753-G4-__	XA-7002	667.00 [302.55]
FW35-7002G5L__	FW35B848GL00			48.9" [1242]	69.5" [1765]			XA-0753-G5-__		742.00 [336.57]
FW35-7002G6L__	—			61.2" [1554]	82.0" [2082]			XA-0753-G6-__		813.00 [368.77]
FW35-7001G1L__	FW35B912GL00		9.1" [231]	12.2" [310]	32.8" [833]	16°	19°	XA-0753-G1-__	XA-7001	529.00 [239.95]
FW35-7001G2L__	FW35B924GL00			18.4" [467]	38.9" [988]			XA-0753-G2-__		578.00 [262.18]
FW35-7001G3L__	FW35B924GL00			24.5" [622]	45.0" [1143]			XA-0753-G3-__		600.00 [272.16]
FW35-7001G4L__	FW35B936GL00			36.7" [932]	57.2" [1452]			XA-0753-G4-__		672.00 [304.81]
FW35-7001G5L__	FW35B948GL00			48.9" [1242]	69.5" [1765]			XA-0753-G5-__		747.00 [338.83]
FW35-7001G6L__	—			61.2" [1554]	82.0" [2082]			XA-0753-G6-__		818.00 [371.04]
FW35-7301G1L__	—		8.6" [218]	10.7" [272]	38.9" [988]	16°	15°	XA-0753-G1-__	XA-7301	539.00 [244.49]
FW35-7301G2L__	—			16.8" [427]	45.0" [1143]			XA-0753-G2-__		563.00 [255.37]
FW35-7301G3L__	—			24.5" [622]	52.6" [1336]			XA-0753-G3-__		596.00 [270.34]
FW35-7301G4L__	—			41.3" [1049]	69.5" [1765]			XA-0753-G4-__		645.00 [292.57]
FW35-7301G5L__	—			53.6" [1361]	82.0" [2082]			XA-0753-G5-__		735.00 [333.39]
FW35-7301G6L__	—			65.8" [1671]	94.0" [2387]			XA-0753-G6-__		810.00 [367.41]
FW35-7009G2L__	—		10.6" [269]	13.8" [351]	38.9" [988]	21°	22°	XA-0752-G2-__	XA-7009	611.00 [277.14]
FW35-7009G3L__	—			19.9" [505]	45.0" [1143]			XA-0752-G3-__		673.00 [305.27]
FW35-7009G4L__	—			32.1" [815]	57.2" [1452]			XA-0752-G4-__		705.00 [319.78]
FW35-7009G5L__	—			44.4" [1128]	69.5" [1765]			XA-0752-G5-__		780.00 [353.80]
FW35-7009G6L__	—			56.6" [1438]	82.0" [2082]			XA-0752-G6-__		851.00 [386.01]
FW35-7009G7L__	—			68.8" [1748]	94.0" [2387]			XA-0752-G7-__		935.00 [424.11]
FW35-7013G1L__	FW35B712GL00	MANUAL RELEASE	7.1" [180]	10.7" [272]	38.9" [988]	11°	7°	XA-0753-G1-__	XA-7013	521.00 [236.32]
FW35-7013G2L__	FW35B724GL00			16.8" [427]	45.0" [1143]			XA-0753-G2-__		545.00 [247.21]
FW35-7013G3L__	FW35B724GL00			24.5" [622]	52.6" [1336]			XA-0753-G3-__		578.00 [262.18]
FW35-7013G4L__	FW35B736GL00			41.3" [1049]	69.5" [1765]			XA-0753-G4-__		636.00 [288.48]
FW35-7013G5L__	FW35B748GL00			53.6" [1361]	82.0" [2082]			XA-0753-G5-__		717.00 [325.23]
FW35-7013G6L__	—			65.8" [1671]	94.0" [2387]			XA-0753-G6-__		792.00 [359.25]
FW35-7012G1L__	FW35B812GL00		8.1" [206]	12.2" [310]	32.8" [833]	14°	19°	XA-0753-G1-__	XA-7012	523.00 [237.23]
FW35-7012G2L__	FW35B824GL00			18.4" [467]	38.9" [988]			XA-0753-G2-__		572.00 [259.45]
FW35-7012G3L__	FW35B824GL00			24.5" [622]	45.0" [1143]			XA-0753-G3-__		594.00 [269.43]
FW35-7012G4L__	FW35B836GL00			36.7" [932]	57.2" [1452]			XA-0753-G4-__		666.00 [302.09]
FW35-7012G5L__	FW35B848GL00			48.9" [1242]	69.5" [1765]			XA-0753-G5-__		741.00 [336.11]
FW35-7012G6L__	—			61.2" [1554]	82.0" [2082]			XA-0753-G6-__		812.00 [368.32]
FW35-7011G1L__	FW35B912GL00		9.1" [231]	12.2" [310]	32.8" [833]	16°	19°	XA-0753-G1-__	XA-7011	528.00 [239.50]
FW35-7011G2L__	FW35B924GL00			18.4" [467]	38.9" [988]			XA-0753-G2-__		577.00 [261.72]
FW35-7011G3L__	FW35B924GL00			24.5" [622]	45.0" [1143]			XA-0753-G3-__		599.00 [271.70]
FW35-7011G4L__	FW35B936GL00			36.7" [932]	57.2" [1452]			XA-0753-G4-__		671.00 [304.36]
FW35-7011G5L__	FW35B948GL00			48.9" [1242]	69.5" [1765]			XA-0753-G5-__		746.00 [338.38]
FW35-7011G6L__	—			61.2" [1554]	82.0" [2082]			XA-0753-G6-__		817.00 [370.58]
FW35-7311G1L__	—		8.6" [218]	10.7" [272]	38.9" [988]	16°	15°	XA-0753-G1-__	XA-7311	530.00 [240.40]
FW35-7311G2L__	—			16.8" [427]	45.0" [1143]			XA-0753-G2-__		554.00 [251.29]
FW35-7311G3L__	—			24.5" [622]	52.6" [1336]			XA-0753-G3-__		587.00 [266.26]
FW35-7311G4L__	—			41.3" [1049]	69.5" [1765]			XA-0753-G4-__		645.00 [292.57]
FW35-7311G5L__	—			53.6" [1361]	82.0" [2082]			XA-0753-G5-__		726.00 [329.31]
FW35-7311G6L__	—			65.8" [1671]	94.0" [2387]			XA-0753-G6-__		801.00 [363.33]
FW35-7019G2L__	—		10.6" [269]	13.8" [351]	38.9" [988]	21°	22°	XA-0752-G2-__	XA-7019	611.00 [277.14]
FW35-7019G3L__	—			19.9" [505]	45.0" [1143]			XA-0752-G3-__		633.00 [287.12]
FW35-7019G4L__	—			32.1" [815]	57.2" [1452]			XA-0752-G4-__		705.00 [319.78]
FW35-7019G5L__	—			44.4" [1128]	69.5" [1765]			XA-0752-G5-__		780.00 [353.80]
FW35-7019G6L__	—			56.6" [1438]	82.0" [2082]			XA-0752-G6-__		851.00 [386.01]
FW35-7019G7L__	—			68.8" [1748]	94.0" [2387]			XA-0752-G7-__		935.00 [424.11]

◊ For right-hand release fifth wheels, change "L" to "R" in part number.
* No longer available if cast version exists.
** See bracket section for more information.

 Amendments and errors reserved. © SAF-HOLLAND, Inc.

FW35 Stationary Kompensator Inboard with Angle Mount



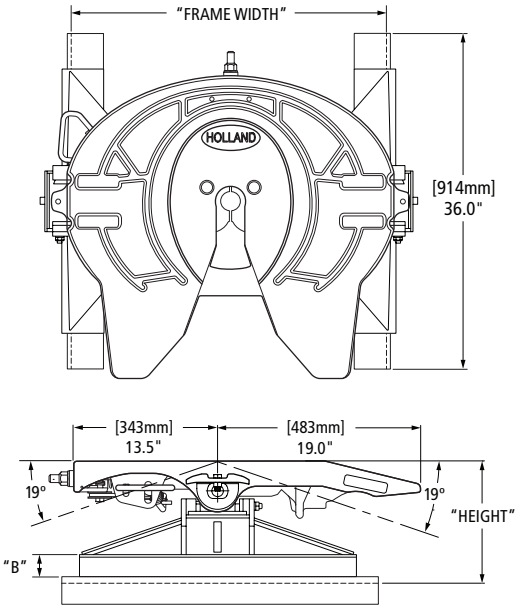

Frame width "A-L": .38" x 4" x 4" angle dimensions
"M-Q": .38" x 5" x 5" angle dimensions (option code 21)
See option codes for other options.

STANDARD OPTION CODES Replaces the Underscore (__) on the new and legacy part number.	
NUMBER CODE	DESCRIPTION
Blank	Standard, No Other Options
02	Manual Secondary Lock
13	Kompensator Dust Covers
14	Grease Fittings in Top Plate, Four (4) Fittings
15	Kompensator Dust Covers and Grease Fittings in Top Plate
19	Komp Lockouts
21	.38" x 5" x 5" Angle
24	Drilled and Tapped for Auto Lube
51	.38" x 4" x 6" Angle
53	.38" x 4" x 4" x 44"Angle, Centered
70	.50" x 5" x 5" Angle
80	Air Release, OEM Replacement Left-Hand Only
82	Drilled and Tapped with Cross Drilled Hole
86	Air Release, Aftermarket Installations, Air Control Modules Included Left-Hand Only
1A	Manual Secondary Lock and Air Release
0E	.38" x 4" x 4" x 44"Angle, Centered and Komp Lockouts

PART NUMBER◊	HEIGHT	B	REPLACEMENT BRACKET**	FW WEIGHT LBS [KG]
FW35-7711GL__	12.9" [328]	3.00"	XA-40-7711-G	582.00 [263.99]
FW35-7712GL__	11.9" [302]	2.00"	XA-40-7712-G	571.00 [259.00]
FW35-7713GL__	9.9" [251]	— +	XA-40-7713-G	527.00 [239.04]

◊ For right-hand release fifth wheels, change "L" to "R" in part number.
+ Kompensator frame bracket extends 1.2" below bottom side of angle.
** See bracket section for more information.

FRAME WIDTH CODE CHART					
CODE	FRAME WIDTH IN [MM]	CODE	FRAME WIDTH IN [MM]	CODE	FRAME WIDTH IN [MM]
A	33.25" [845]	F	33.88" [861]	M	34.62" [879]
B	33.38" [848]	G†	**34.00" [864]**	N	34.75" [883]
C	33.50" [851]	H	34.12" [867]	P	34.88" [886]
D	33.62" [854]	K	34.38" [873]	Q	35.00" [889]
E	33.75" [857]	L	34.50" [876]		

† Standard

XL-FW10081PM-en-US Rev D 2016-03-01 Amendments and errors reserved. © SAF-HOLLAND, Inc.

FW35 Sliding Kompensator Inboard with Angle Mount



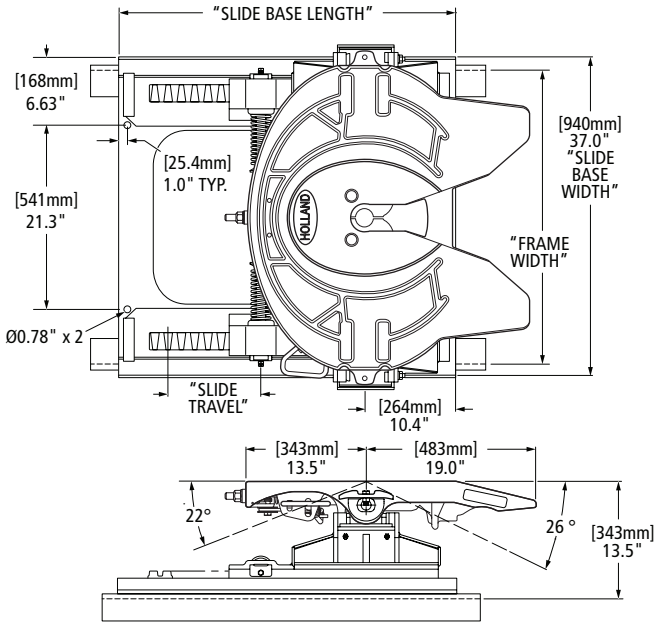

Frame width "A"-"K": .50" x 4" x 4" angle dimensions

STANDARD OPTION CODES Replaces the Underscore (__) on the new and legacy part number.	
NUMBER CODE	DESCRIPTION
Blank	Standard, No Other Options
19	Komp Lockouts
24	Drilled and Tapped for Auto Lube
27	Manual Secondary Lock and Kompensator Lockouts

FRAME WIDTH CODE CHART					
CODE	FRAME WIDTH IN [MM]	CODE	FRAME WIDTH IN [MM]	CODE	FRAME WIDTH IN [MM]
A	33.25" [845]	E	33.75" [857]	L	34.50" [876]
B	33.38" [848]	F	33.88" [861]	J	34.25" [870]
C	33.50" [851]	**G†**	**34.00" [864]**	K	34.38" [873]
D	33.62" [854]	H	34.12" [867]		

† Standard

PART NUMBER◊	SLIDE TRAVEL IN [MM]	SLIDE BASE LENGTH IN [MM]	REPLACEMENT SLIDE BASE**	REPLACEMENT BRACKET**	FW WEIGHT LBS [KG]
FW35-7201G1L__	10.7" [272]	38.9" [988]	XA-02136-G1	XA-7201	841.00 [381.47]
FW35-7201G2L__	16.8" [427]	45.0" [1143]	XA-02136-G2		878.00 [398.25]
FW35-7201G3L__	24.5" [622]	52.6" [1336]	XA-02136-G3A		948.00 [430.01]
FW35-7201G4L__	41.3" [1049]	69.5" [1765]	XA-02136-G4		1009.00 [457.67]
FW35-7201G5L__	53.6" [1361]	82.0" [2082]	XA-02136-G5		1153.00 [522.99]
FW35-7201G6L__	65.8" [1671]	94.0" [2387]	XA-02136-G6		1253.00 [568.35]

◊ For right-hand release fifth wheels, change "L" to "R" in part number.
** See bracket section for more information.

 Amendments and errors reserved. © SAF-HOLLAND, Inc.



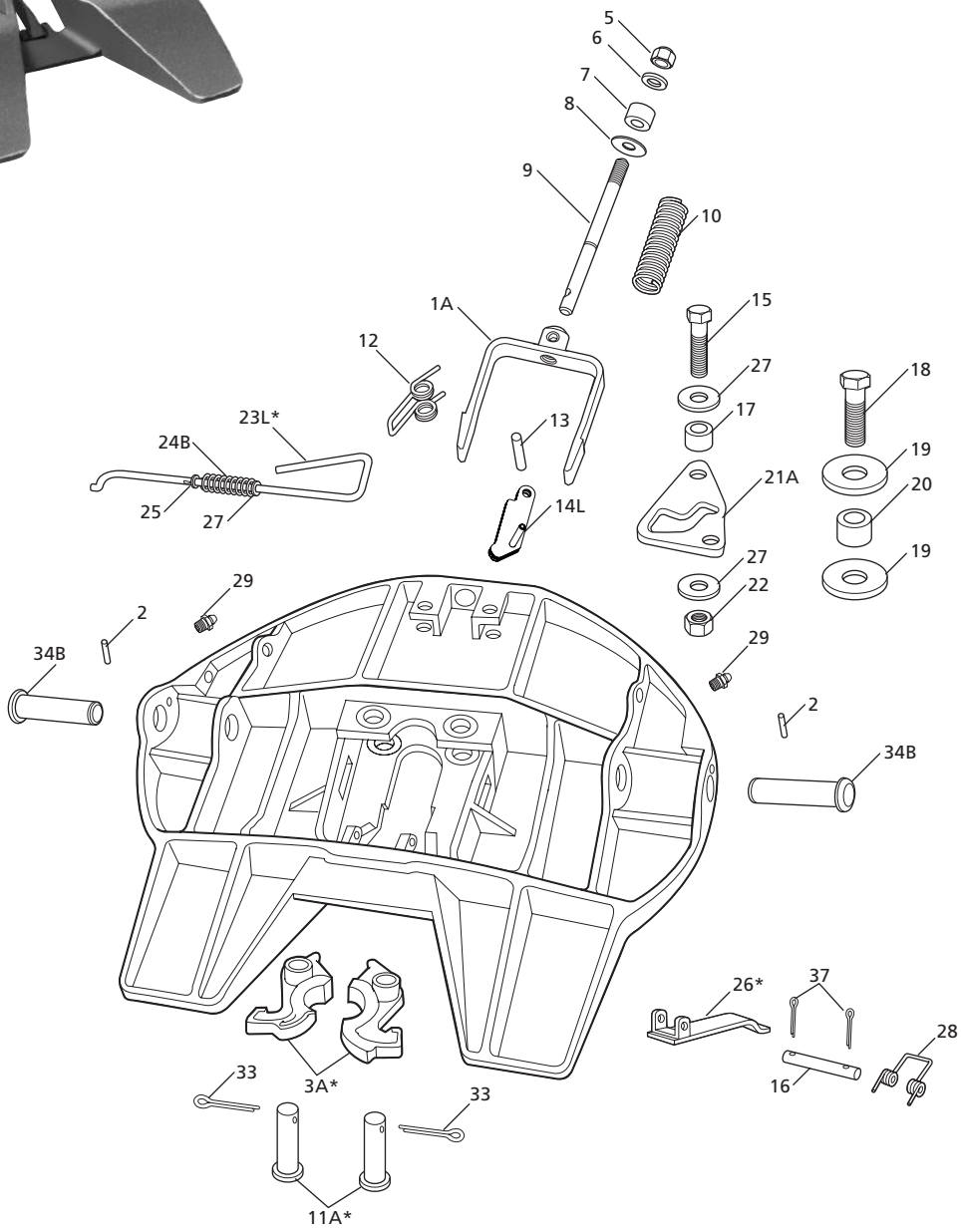

FOR RIGHT-HAND RELEASE

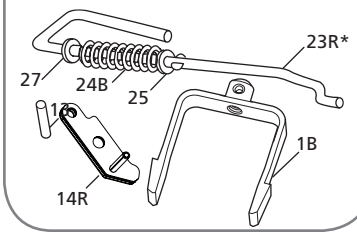

FOR MODELS EQUIPPED WITH MANUAL SECONDARY LOCK

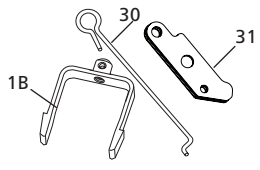

XL-FW10081PM-en-US Rev D 2016-03-01 Amendments and errors reserved. © SAF-HOLLAND, Inc.

FW3500 PARTS LIST				
ITEM	DESCRIPTION	PART NUMBER	QTY.	WEIGHT LBS [KG]
1A	Yoke	XA-1703-F	1	5.88 [2.67]
1B	Yoke	XA-07295-THK	1	5.87 [2.66]
2	Pin, Spring, .38" Dia. x 1.75" Long	XB-21-S-375-1750	2	0.02 [0.01]
3A*	Lock Jaw, See RK-4109939	XA-1704	1	7.87 [3.57]
5	Lock Nut, .75"-16 GR C	XB-HNH-34-F	1	0.14 [0.06]
6	Washer, .81" I.D. x 1.47" O.D.	XB-PW-1316-112	1	0.04 [0.02]
7	Washer, Rubber, 1.50" O.D. x .75" I.D.	XB-1127	1	0.03 [0.01]
8	Tag, Lock Adjustment	XB-02312	1	N/A
9	Yoke Shaft	XA-1706	1	1.28 [0.58]
10	Spring, Compression	XB-1505	1	0.61 [0.28]
11A*	Pin, Lock, See RK-63503	XA-1313	2	1.13 [0.51]
12	Spring, Torsion	XB-2149	1	0.06 [0.03]
13	Pin, Spring, .50" Dia. x 2.75" Long	XB-21-S-500-2750	1	0.02 [0.01]
14L	Lock, Secondary, Left-Hand	XA-11992-L	1	0.67 [0.30]
14R	Lock, Secondary, Right-Hand	XA-11992-R	1	0.67 [0.30]
15	HHCS, .50"-20 x 1.75" GR 5	XB-2083	1	0.13 [0.06]
16	Pin, .50" Dia. x 4.50" Long	XA-1055	1	0.24 [0.11]
17	Roller, .52" I.D. x 1" O.D. x .38" Long	XA-1029	1	0.06 [0.03]
18	HHCS, .63"-18 x 1.75" GR 8	XB-CX-58-F-134	1	0.21 [0.10]
19	Washer, .66" I.D. x 2.25" O.D.	XB-1030-1	2	0.19 [0.09]
20	Roller, .66" I.D. x 1" O.D. x .38" Long	XA-1507	1	0.05 [0.02]
21A	Cam Plate	XA-1705	1	0.80 [0.36]
22	Lock Nut, .50"-20 GR C	XB-T-69-A	1	0.04 [0.02]
23L*	Release Handle, Left-Hand, See RK-1707-M	XA-1707-M	1	1.94 [0.88]
23R*	Release Handle, Right Hand, See RK-1707-6	XA-1707-6	1	1.94 [0.88]
24B	Spring, Manual Release	XB-1028-1	1	0.10 [0.04]
25	Washer, .53"I.D. x 1.06" O.D.	XB-PW-1732-1-116	1	0.02 [0.01]
26*	Lock Guard, See RK-05329	XA-3514	1	0.89 [0.40]
27	Washer, .56" I.D. x 1.38" O.D.	XB-T-49	3	0.04 [0.02]
28	Spring, Torsion	XB-1044	1	0.10 [0.05]
29	Grease Zerk	XB-H-38	2	N/A
30	Release Handle, Manual Secondary Lock	XA-3542-M	1	0.25 [0.11]
31	Lock, Manual Secondary	XA-11992	1	0.61 [0.28]
33	Pin, Cotter, .25" x 2" Long	XB-5	2	0.05 [0.02]
34B	Pin, Bracket	XA-2016	2	2.00 [0.91]
37	Pin, Cotter, .13" Dia. x 1" Long	XB-16	2	0.01 [0.005]

*Not sold individually - must be purchased in kit.

NOTE: See Accessories Section for Air Release and No-Tilt Kits.

NOTE: Top Plate replaced by FW35

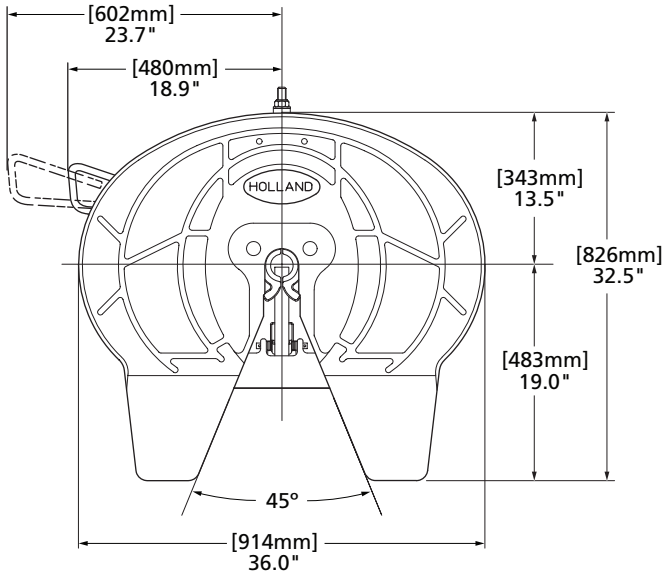

For XA-3501 fifth wheel rebuild procedures, see Holland publication XL-FW129 at www.safholland.us

 Amendments and errors reserved. © SAF-HOLLAND, Inc.

RK-05329
Lock Guard

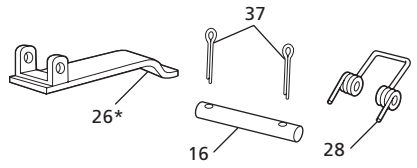

RK-63503
Standard Lock

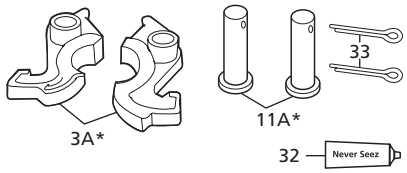

RK-63503-82
Lock with Grease Fittings

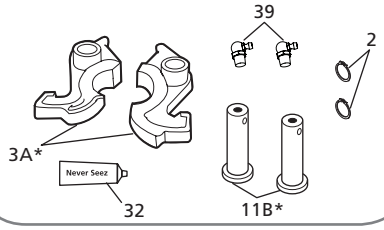

RK-1707-M
Release Handle, Left-Hand

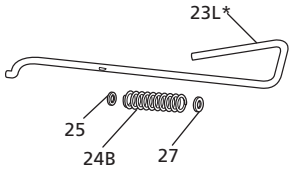

RK-1707-6
Release Handle, Right-Hand

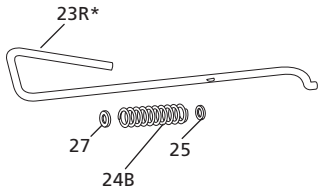

RK-04413
Bracket Pin and Cushions

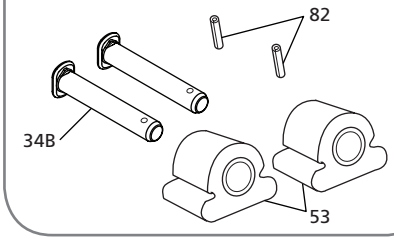

FW3500 KIT PARTS LIST

ITEM	DESCRIPTION	PART NUMBER	QTY.	WEIGHT LBS [KG]
2	Retaining Ring, 1" Dia.	XB-07398	2	0.01 [0.005]
3A*	Lock Jaw	XA-1704	1	7.87 [3.57]
11A*	Pin, Lock	XA-1313	2	1.13 [0.51]
11B*	Pin, Lock with Grease Fittings	XA-1313-15	2	1.12 [0.51]
16	Pin, .50" Dia. x 4.50" Long	XA-1055	1	0.24 [0.11]
23L*	Release Handle, Left-Hand	XA-1707-M	1	1.94 [0.88]
23R*	Release Handle, Right-Hand	XA-1707-6	1	1.94 [0.88]
24B	Spring, Manual Release	XB-1028-1	1	0.10 [0.04]
25	Washer, .53"I.D. x 1.06" O.D.	XB-PW-1732-1-116	1	0.02 [0.01]
26*	Lock Guard	XA-3514	1	0.89 [0.40]

FW3500 KIT PARTS LIST

ITEM	DESCRIPTION	PART NUMBER	QTY.	WEIGHT LBS [KG]
27	Washer, .56" I.D. x 1.38" O.D.	XB-T-49	1	0.04 [0.02]
28	Spring, Torsion	XB-1044	1	0.10 [0.05]
32	Never-Seez, 7.5g Tube	XB-02967	1	N/A
33	Pin, Cotter, .25" x 2" Long	XB-5	2	0.05 [0.02]
34B	Pin, Bracket	XA-2016	2	2.00 [0.91]
37	Pin, Cotter, .13" Dia. x 1" Long	XB-16	2	0.01 [0.005]
39	Fittings, Grease 90°	XB-H-38-A	2	0.03 [0.01]
53	Cushion, Rubber	XB-0011-2	2	0.60 [0.27]
82	Pin, Spring, .38" Dia. x 1.75" Long	XB-21-S-375-1750	2	0.02 [0.01]

*Not sold individually - must be purchased in kit.

XL-FW10081PM-en-US Rev D 2016-03-01 Amendments and errors reserved. © SAF-HOLLAND, Inc.

RK-63501
Complete Rebuild, Left-Hand

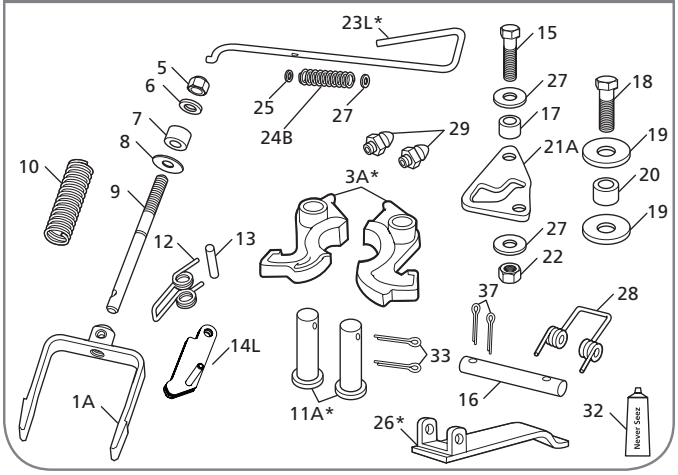

RK-63500
Complete Rebuild, Right-Hand

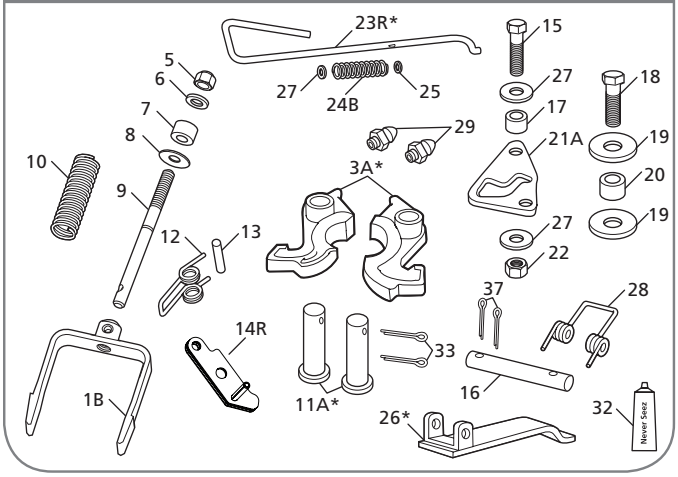

FW3500 KIT PARTS LIST

ITEM	DESCRIPTION	PART NUMBER	QTY.	WEIGHT LBS [KG]
1A	Yoke	XA-1703-F	1	5.88 [2.67]
1B	Yoke	XA-07295-THK	1	5.87 [2.66]
3A*	Lock Jaw, See RK-4109939	XA-1704	1	7.87 [3.57]
5	Lock Nut, .75"-16 GR C	XB-HNH-34-F	1	0.14 [0.06]
6	Washer, .81" I.D. x 1.47" O.D.	XB-PW-1316-112	1	0.04 [0.02]
7	Washer, Rubber, 1.5" O.D. x .75" I.D.	XB-1127	1	0.03 [0.01]
8	Tag, Lock Adjustment	XB-02312	1	N/A
9	Yoke Shaft	XA-1706	1	1.28 [0.58]
10	Spring, Compression	XB-1505	1	0.61 [0.28]
11A*	Pin, Lock, See RK-63503	XA-1313	2	1.13 [0.51]
12	Spring, Torsion	XB-2149	1	0.06 [0.03]
13	Pin, Spring, .50" Dia. x 2.75" Long	XB-21-S-500-2750	1	0.02 [0.01]
14L	Lock, Secondary Left-Hand	XA-11992-L	1	0.67 [0.30]
14R	Lock, Secondary Right-Hand	XA-11992-R	1	0.67 [0.30]
15	HHCS, .50"-20 x 1.75" GR 5	XB-2083	1	0.13 [0.06]
16	Pin, .50" Dia. x 4.50" Long	XA-1055	1	0.24 [0.11]
17	Roller, .52" I.D. x 1" O.D. x .38" Long	XA-1029	1	0.06 [0.03]

FW3500 KIT PARTS LIST

ITEM	DESCRIPTION	PART NUMBER	QTY.	WEIGHT LBS [KG]
18	HHCS, .63"-18 x 1.75" GR 8	XB-CX-58-F-134	1	0.21 [0.10]
19	Washer, .66" I.D. x 2.25" O.D.	XB-1030-1	2	0.19 [0.09]
20	Roller, .66" I.D. x 1" O.D. x .38" Long	XA-1507	1	0.05 [0.02]
21A	Cam Plate	XA-1705	1	0.80 [0.36]
22	Lock Nut, .50"-20 GR C	XB-T-69-A	1	0.04 [0.02]
23L*	Release Handle, Left-Hand, See RK-1707-M	XA-1707-M	1	1.94 [0.88]
23R*	Release Handle, Right-Hand, See RK-1707-6	XA-1707-6	1	1.94 [0.88]
24B	Spring, Manual Release	XB-1028-1	1	0.10 [0.04]
25	Washer, .53" I.D. x 1.06" O.D.	XB-PW-1732-1-116	1	0.02 [0.01]
26*	Lock Guard, See RK-05329	XA-3514	1	0.89 [0.40]
27	Washer, .56" I.D. x 1.38" O.D.	XB-T-49	3	0.04 [0.02]
28	Spring, Torsion	XB-1044	1	0.10 [0.05]
29	Grease Zerk	XB-H-38	2	N/A
32	Never-Seez, 7.5g Tube	XB-02967	1	0.02 [0.01]
33	Pin, Cotter, .25" x 2" Long	XB-5	2	0.05 [0.02]
37	Pin, Cotter, .13" Dia. x 1" Long	XB-16	2	0.01 [0.005]

*Not sold individually - must be purchased in kit.

 Amendments and errors reserved. © SAF-HOLLAND, Inc.

RK-63506
Complete Rebuild, Secondary Lock, Left-Hand

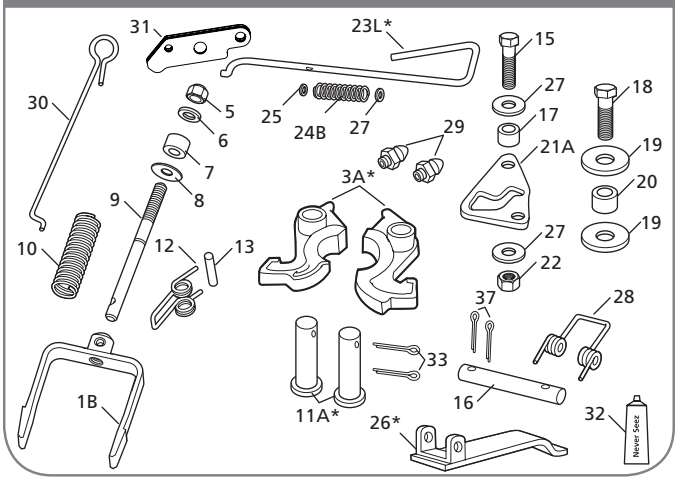

RK-63505
Complete Rebuild, Secondary Lock, Right-Hand

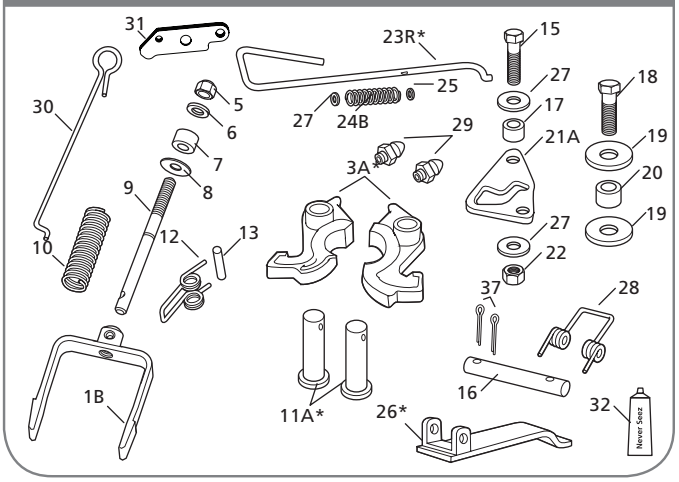

FW3500 KIT PARTS LIST

ITEM	DESCRIPTION	PART NUMBER	QTY.	WEIGHT LBS [KG]
1B	Yoke	XA-07295-THK	1	5.87 [2.66]
3A*	Lock Jaw, See RK-4109939	XA-1704	1	7.87 [3.57]
5	Lock Nut, .75"-16 GR C	XB-HNH-34-F	1	0.14 [0.06]
6	Washer, .81" I.D. x 1.47" O.D.	XB-PW-1316-112	1	0.04 [0.02]
7	Washer, Rubber, 1.5" O.D. x .75" I.D.	XB-1127	1	0.03 [0.01]
8	Tag, Lock Adjustment	XB-02312	1	N/A
9	Yoke Shaft	XA-1706	1	1.28 [0.58]
10	Spring, Compression	XB-1505	1	0.61 [0.28]
11A*	Pin, Lock, See RK-63503	XA-1313	2	1.13 [0.51]
12	Spring, Torsion	XB-2149	1	0.06 [0.03]
13	Pin, Spring, .50" Dia. x 2.75" Long	XB-21-S-500-2750	1	0.02 [0.01]
15	HHCS, .50"-20 x 1.75" GR 5	XB-2083	1	0.13 [0.06]
16	Pin, .50" Dia. x 4.50" Long	XA-1055	1	0.24 [0.11]
17	Roller, .52" I.D. x 1" O.D. x .38" Long	XA-1029	1	0.06 [0.03]
18	HHCS, .63"-18 x 1.75" GR 8	XB-CX-58-F-134	1	0.21 [0.10]
19	Washer, .66" I.D. x 2.25" O.D.	XB-1030-1	2	0.19 [0.09]
20	Roller, .66" I.D. x 1" O.D. x .38" Long	XA-1507	1	0.05 [0.02]

FW3500 KIT PARTS LIST

ITEM	DESCRIPTION	PART NUMBER	QTY.	WEIGHT LBS [KG]
21A	Cam Plate	XA-1705	1	0.80 [0.36]
22	Lock Nut, .50"-20 GR C	XB-T-69-A	1	0.04 [0.02]
23L*	Release Handle, Left-Hand, See RK-1707-M	XA-1707-M	1	1.94 [0.88]
23R*	Release Handle, Right-Hand, See RK-1707-6	XA-1707-6	1	1.94 [0.88]
24B	Spring, Manual Release	XB-1028-1	1	0.10 [0.04]
25	Washer, .53" I.D. x 1.06" O.D.	XB-PW-1732-1-116	1	0.02 [0.01]
26*	Lock Guard, See RK-05329	XA-3514	1	0.89 [0.40]
27	Washer, .56" I.D. x 1.38" O.D.	XB-T-49	3	0.04 [0.02]
28	Spring, Torsion	XB-1044	1	0.10 [0.05]
29	Grease Zerk	XB-H-38	2	N/A
30	Release Handle, Manual Secondary Lock	XA-3542-M	1	0.25 [0.11]
31	Lock, Manual Secondary	XA-11992	1	0.61 [0.28]
32	Never-Seez, 7.5g Tube	XB-02967	1	0.02 [0.01]
33	Pin, Cotter, .25" x 2" Long	XB-5	2	0.05 [0.02]
37	Pin, Cotter, .13" Dia. x 1" Long	XB-16	2	0.01 [0.005]

*Not sold individually - must be purchased in kit..

XL-FW10081PM-en-US Rev D 2016-03-01 Amendments and errors reserved. © SAF-HOLLAND, Inc.

RK-63509
Complete Rebuild, Left-Hand Release with Lock Pin Bushings

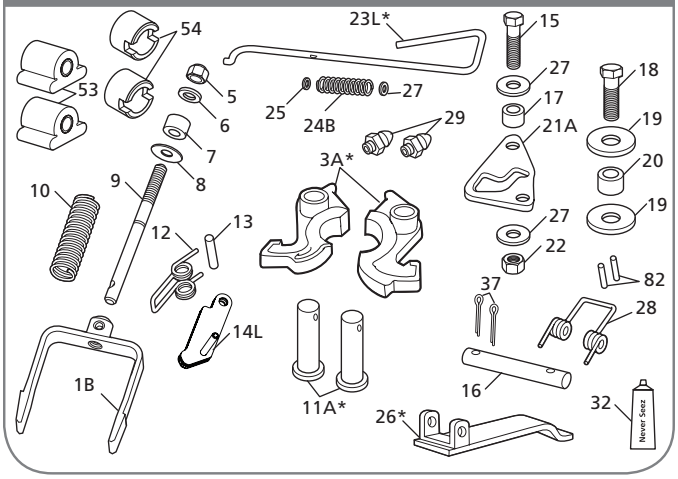

RK-63508
Complete Rebuild, Right-Hand Release with Lock Pin Bushings

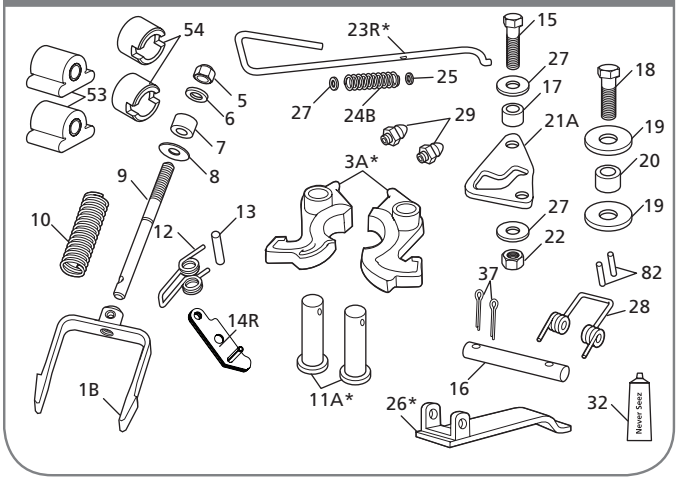

FW3500 KIT PARTS LIST

ITEM	DESCRIPTION	PART NUMBER	QTY.	WEIGHT LBS [KG]
1B	Yoke	XA-07295-THK	1	5.87 [2.66]
3A*	Lock Jaw, See RK-4109939	XA-1704	1	7.87 [3.57]
5	Lock Nut, .75"-16 GR C	XB-HNH-34-F	1	0.14 [0.06]
6	Washer, .81" I.D. x 1.47" O.D.	XB-PW-1316-112	1	0.04 [0.02]
7	Washer, Rubber, 1.50" O.D. x .75" I.D.	XB-1127	1	0.03 [0.01]
8	Tag, Lock Adjustment	XB-02312	1	N/A
9	Yoke Shaft	XA-1706	1	1.28 [0.58]
10	Spring, Compression	XB-1505	1	0.61 [0.28]
11A*	Pin, Lock, See RK-63503	XA-1313	2	1.13 [0.51]
12	Spring, Torsion	XB-2149	1	0.06 [0.03]
13	Pin, Spring, .50" Dia. x 2.75" Long	XB-21-S-500-2750	1	0.02 [0.01]
14L	Lock, Secondary, Left-Hand	XA-11992-L	1	0.67 [0.30]
14R	Lock, Secondary, Right-Hand	XA-11992-R	1	0.67 [0.30]
15	HHCS, .50"-20 x 1.75" GR 5	XB-2083	1	0.13 [0.06]
16	Pin, .50" Dia. x 4.50" Long	XA-1055	1	0.24 [0.11]
17	Roller, .52" I.D. x 1" O.D. x .38" Long	XA-1029	1	0.06 [0.03]
18	HHCS, .63"-18 x 1.75" GR 8	XB-CX-58-F-134	1	0.21 [0.10]
19	Washer, .66" I.D. x 2.25" O.D.	XB-1030-1	2	0.19 [0.09]

FW3500 KIT PARTS LIST

ITEM	DESCRIPTION	PART NUMBER	QTY.	WEIGHT LBS [KG]
20	Roller, .66" I.D. x 1" O.D. x .38" Long	XA-1507	1	0.05 [0.02]
21A	Cam Plate	XA-1705	1	0.80 [0.36]
22	Lock Nut, .50"-20 GR C	XB-T-69-A	1	0.04 [0.02]
23L*	Release Handle, Left-Hand, See RK-1707-M	XA-1707-M	1	1.94 [0.88]
23R*	Release Handle, Right-Hand, See RK-1707-6	XA-1707-6	1	1.94 [0.88]
24B	Spring, Manual Release	XB-1028-1	1	0.10 [0.04]
25	Washer, .53" I.D. x 1.06" O.D.	XB-PW-1732-1-116	1	0.02 [0.01]
26*	Lock Guard, See RK-05329	XA-3514	1	0.89 [0.40]
27	Washer, .56" I.D. x 1.38" O.D.	XB-T-49	3	0.04 [0.02]
28	Spring, Torsion	XB-1044	1	0.10 [0.05]
29	Grease Zerk	XB-H-38	2	0.01 [0.00]
32	Never-Seez, 7.5g Tube	XB-02967	1	N/A
37	Pin, Cotter, .13" Dia. x 1" Long	XB-16	2	0.01 [0.00]
53	Bushing	XA-01241	2	0.25 [0.11]
54	Bushing	XA-01242	2	0.35 [0.16]
82	Pin, Spring, .25" Dia. x 1.88" Long	XB-21-S-250-1875	2	0.02 [0.01]

*Not sold individually - must be purchased in kit..

 Amendments and errors reserved. © SAF-HOLLAND, Inc.

RK-63510
Complete Rebuild, Secondary Lock with Lock Pin Bushings, Left-Hand Release

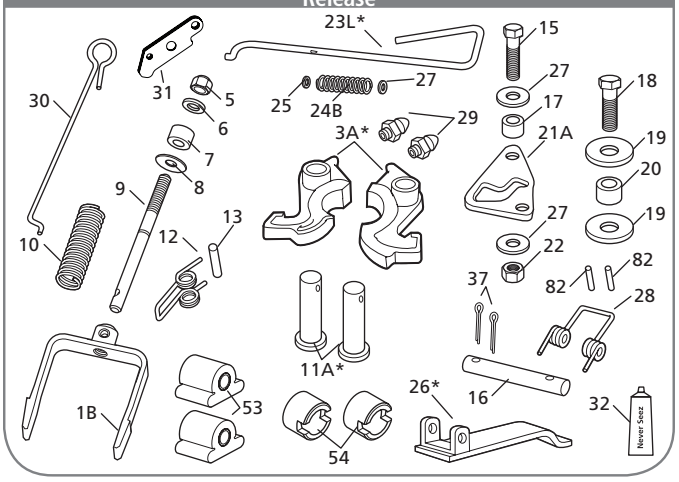

RK-63511
Complete Rebuild, Secondary Lock with Lock Pin Bushings, Right-Hand Release

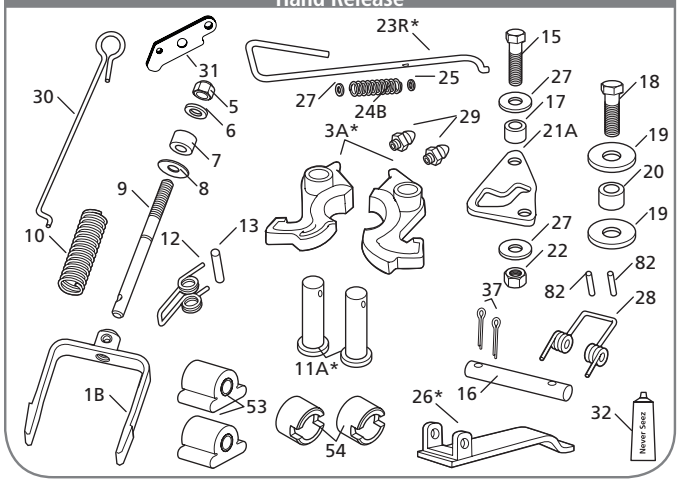

FW3500 KIT PARTS LIST

ITEM	DESCRIPTION	PART NUMBER	QTY.	WEIGHT LBS [KG]
1B	Yoke	XA-07295-THK	1	5.87 [2.66]
3A*	Lock Jaw, See RK-4109939	XA-1704	1	7.87 [3.57]
5	Lock Nut, .75"-16 GR C	XB-HNH-34-F	1	0.14 [0.06]
6	Washer, .81" I.D. x 1.47" O.D.	XB-PW-1316-112	1	0.04 [0.02]
7	Washer, Rubber, 1.5" O.D. x .75" I.D.	XB-1127	1	0.03 [0.01]
8	Tag, Lock Adjustment	XB-02312	1	N/A
9	Yoke Shaft	XA-1706	1	1.28 [0.58]
10	Spring, Compression	XB-1505	1	0.61 [0.28]
11A*	Pin, Lock, See RK-63503	XA-1313	2	1.13 [0.51]
12	Spring, Torsion	XB-2149	1	0.06 [0.03]
13	Pin, Spring, .50" Dia. x 2.75" Long	XB-21-S-500-2750	1	0.02 [0.01]
15	HHCS, .50"-20 x 1.75" GR 5	XB-2083	1	0.13 [0.06]
16	Pin, .50" Dia. x 4.50" Long	XA-1055	1	0.24 [0.11]
17	Roller, .52" I.D. x 1" O.D. x .38" Long	XA-1029	1	0.06 [0.03]
18	HHCS, .63"-18 x 1.75" GR 8	XB-CX-58-F-134	1	0.21 [0.10]
19	Washer, .66" I.D. x 2.25" O.D.	XB-1030-1	2	0.19 [0.09]
20	Roller, .66" I.D. x 1" O.D. x .38" Long	XA-1507	1	0.05 [0.02]
21A	Cam Plate	XA-1705	1	0.80 [0.36]

FW3500 KIT PARTS LIST

ITEM	DESCRIPTION	PART NUMBER	QTY.	WEIGHT LBS [KG]
22	Lock Nut, .50"-20 GR C	XB-T-69-A	1	0.04 [0.02]
23L*	Release Handle, Left-Hand, See RK-1707-M	XA-1707-M	1	1.94 [0.88]
23R*	Release Handle, Right-Hand, See RK-1707-6	XA-1707-6	1	1.94 [0.88]
24B	Spring, Manual Release	XB-1028-1	1	0.10 [0.04]
25	Washer, .53" I.D. x 1.06" O.D.	XB-PW-1732-1-116	1	0.02 [0.01]
26*	Lock Guard, See RK-05329	XA-3514	1	0.89 [0.40]
27	Washer, .56" I.D. x 1.38" O.D.	XB-T-49	3	0.04 [0.02]
28	Spring, Torsion	XB-1044	1	0.10 [0.05]
29	Grease Zerk	XB-H-38	2	N/A
30	Release Handle, Manual Secondary Lock	XA-3542-M	1	0.25 [0.11]
31	Lock, Manual Secondary	XA-11992	1	0.61 [0.28]
32	Never-Seez, 7.5g Tube	XB-02967	1	N/A
37	Pin, Cotter, .13" Dia. x 1" Long	XB-16	2	0.01 [0.00]
53	Bushing	XA-01241	2	0.25 [0.11]
54	Bushing	XA-01242	2	0.35 [0.16]
82	Pin, Spring, .25" Dia. x 1.88" Long	XB-21-S-250-1875	2	0.02 [0.01]

*Not sold individually - must be purchased in kit..

XL-FW10081PM-en-US Rev D 2016-03-01 Amendments and errors reserved. © SAF-HOLLAND, Inc.

Traditional Style Stationary Fifth Wheel Assembly Part Numbers

General Holland prefix indicating complete fifth wheel assembly

SERIES	
3500	FW3500 Series

FRAME WIDTH			
LETTER	WIDTH	LETTER	WIDTH
X	No Angle	F	33.88"
A	33.25"	G	34.00"
B	33.38"	H	34.12"
C	33.50"	J	34.25"
D	33.62"	K	34.38"
E	33.75"	L	34.50"

RELEASE HANDLE	
NO.	DESCRIPTION
L	Left-hand (Road-side)
R	Right-hand (Curb-side)

FW 3500 XXXX X X X XX

MOUNTING STYLE			
NO.	HEIGHT	NO.	HEIGHT
Foot Mount		*Bracket with Angle*	
7801	8.7"	7811	8.7"
7802	7.7"	7812	7.7"
7803	6.7"	7813	6.7"
7804	5.7"	7814	5.7"
Integrated Plate		*Bracket for Angle*	
7883	8.6"	7821	8.3"
8774	7.6"	7822	7.3"
7885	6.6"	7823	6.3"
7886	5.6"	7824	5.3"

SLIDE TRAVEL	
NO.	DESCRIPTION
1	12.2"
2	18.4"
3	24.5"
4	36.7"
5	48.9"

OPTION CODE*	
NO.	DESCRIPTION
BLANK	No option
02	Manual Secondary Lock
24	Drilled & Tapped for Auto Lube
Other Options Available	

Traditional Style Sliding Fifth Wheel Assembly Part Numbers

General Holland prefix indicating complete fifth wheel assembly

SERIES	
3500	FW3500 Series

FRAME WIDTH			
LETTER	WIDTH	LETTER	WIDTH
X	No Angle	G	34.00"
A	33.25"	H	34.12"
B	33.38"	J	34.25"
C	33.50"	K	34.38"
D	33.62"	L	34.50"
E	33.75"	*Outboard*	
F	33.88"	T	Angles not Included

RELEASE HANDLE	
NO.	DESCRIPTION
L	Left-hand (Road-side)
R	Right-hand (Curb-side)

FW 3500 XXXX X X X XX

MOUNTING STYLE			
NO.	HEIGHT	NO.	HEIGHT
Over the Frame		*Outboard*	
7001	8.63"	8001	8.63"
7002	7.63"	8002	7.63"
7003	6.63"	8003	6.63"

SLIDE TRAVEL	
NO.	DESCRIPTION
1	12.2"
2	18.4"
3	24.5"
4	36.7"
5	48.9"

OPTION CODE*	
NO.	DESCRIPTION
BLANK	No option
02	Manual Secondary Lock
24	Drilled & Tapped for Auto Lube
Other Options Available	

 Amendments and errors reserved. © SAF-HOLLAND, Inc.

SAF-HOLLAND Group

FW3500 Stationary Foot Mount



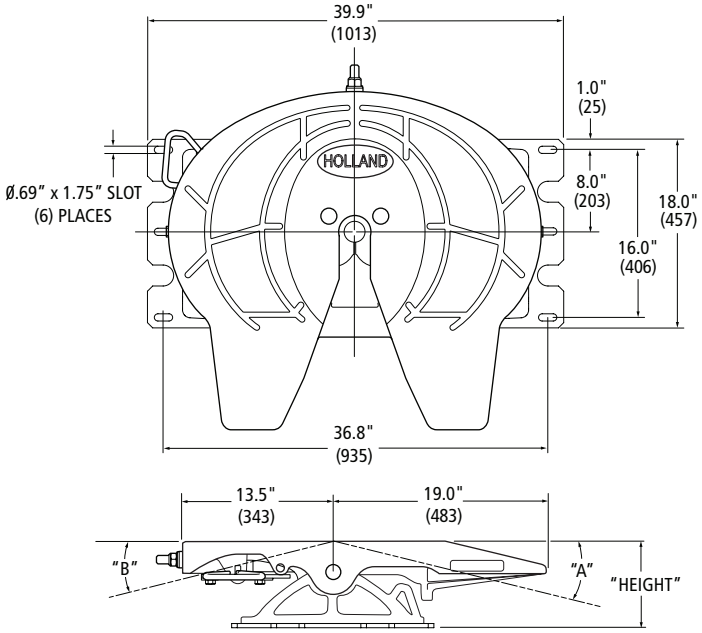

STANDARD OPTION CODES Replaces the Underscore (__) on the legacy part number.			
CODE	DESCRIPTION	CODE	DESCRIPTION
Blank	Standard, No Other Options.	02	Manual Secondary Lock

LEGACY FW PART NUMBER (FABRICATED BRACKET)*◊	HEIGHT IN [MM]	A	B	REPLACEMENT BRACKETS**	FW WEIGHT LBS [KG]
FW3500-7804XL__	5.6" [142]	8°	8°	RK-Y600	300.00 [136.08]
FW3500-7803XL__	6.6" [168]	11°	11°	RK-Y700	306.00 [138.80]
FW3500-7802XL__	7.6" [193]	14°	14°	RK-Y800	310.00 [140.61]
FW3500-7801XL__	8.6" [218]	17°	17°	RK-Y900	316.00 [143.34]

◊ For right-hand release fifth wheels, change "L" to "R" in part number.
*No Longer Available.
** See bracket section for more information.

FW3500 Stationary Integrated Plate Mount



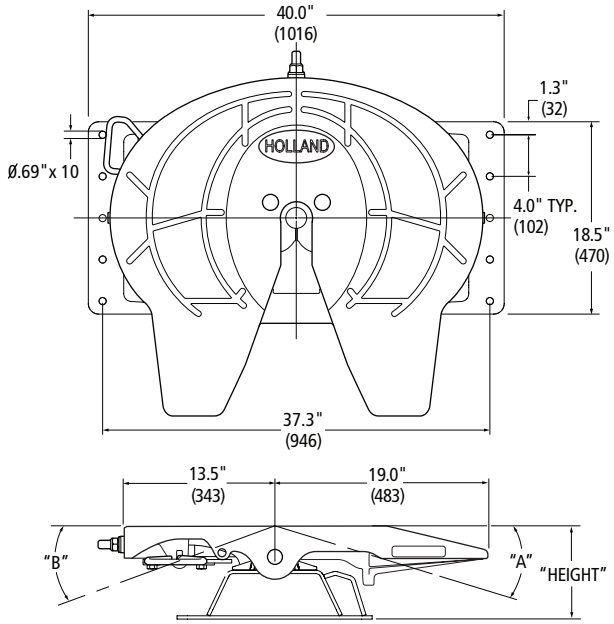

STANDARD OPTION CODES Replaces the Underscore (__) on the legacy part number.			
CODE	DESCRIPTION	CODE	DESCRIPTION
Blank	Standard, No Other Options.	02	Manual Secondary Lock

LEGACY FW PART NUMBER (FABRICATED BRACKET)*◊	HEIGHT IN [MM]	A	B	REPLACEMENT BRACKETS**	FW WEIGHT LBS [KG]
FW3500-7886XL__	5.6" [142]	8°	8°	RK-Z600	316.00 [143.34]
FW3500-7885XL__	6.6" [168]	11°	11°	RK-Z700	324.00 [146.96]
FW3500-7884XL__	7.6" [193]	14°	14°	RK-Z800	331.00 [150.14]
FW3500-7883XL__	8.6" [218]	17°	17°	RK-Z900	327.00 [148.32]

◊ For right-hand release fifth wheels, change "L" to "R" in part number.
* No Longer Available
** See bracket section for more information.

XL-FW10081PM-en-US Rev D 2016-03-01 Amendments and errors reserved. © SAF-HOLLAND, Inc.

FW3500 Stationary Brackets for Angle Mounting

Also Available With Angle Later In This Section.



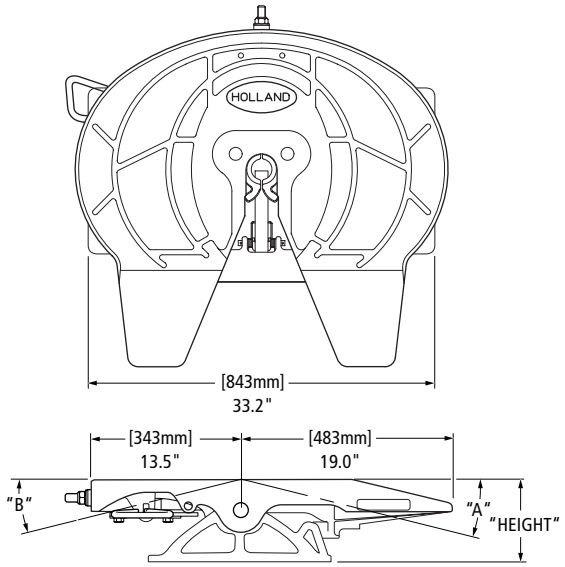

STANDARD OPTION CODES Replaces the Underscore (__) on the legacy part number.	
NUMBER CODE	DESCRIPTION
Blank	Standard, No Other Options.
02	Manual Secondary Lock

LEGACY FW PART NUMBER (FABRICATED BRACKET)*◊	HEIGHT IN [MM}	A	B	REPLACEMENT BRACKETS**	FW WEIGHT LBS [KG]
FW3500-7824XL__	5.6" [142]	8°	8°	RK-X600	270.00 [122.47]
FW3500-7823XL__	6.6" [168]	11°	11°	RK-X700	276.00 [125.19]
FW3500-7822XL__	7.6" [193]	14°	14°	RK-X800	281.00 [127.46]
FW3500-7821XL__	8.6" [218]	17°	17°	RK-X900	286.00 [129.73]

◊ For right-hand release fifth wheels, change "L" to "R" in part number.
*No Longer Available.
** See bracket section for more information.

FW3500 Stationary No Tilt Outboard for Angle Mount

Also Available With Angle Later In This Section.



Outboard

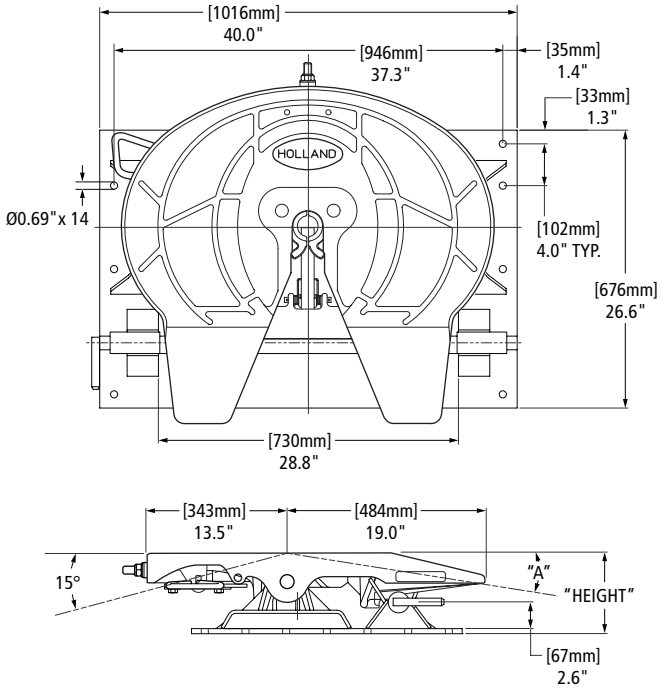

STANDARD OPTION CODES Replaces the Underscore (__) on the legacy part number.	
NUMBER CODE	DESCRIPTION
06	No-Tilt
34	Manual Secondary Lock and No-Tilt

OUTBOARD FW PART NUMBER*◊	HEIGHT IN [MM}	A	REPLACEMENT BRACKETS**	FW WEIGHT LBS [KG]
FW3500-8984XL__	7.8" [198]	9°	XA-8984	490.00 [222.26]
FW3500-8983XL__	8.8" [224]	14°	XA-8983	490.00 [222.26]

** See bracket section for more information.
◊ For right-hand release fifth wheels, change "L" to "R" in part number.

NOTE: See Accessories Section for No-Tilt Kits. Not included in Replacement Bracket part number.

NOTE: No-Tilt Bar not included in Bracket Replacement Kit, must be purchased separately.

 Amendments and errors reserved. © SAF-HOLLAND, Inc.

FW3500 Stationary No Tilt Inboard for Angle Mount

Also Available With Angle Later In This Section.



Inboard

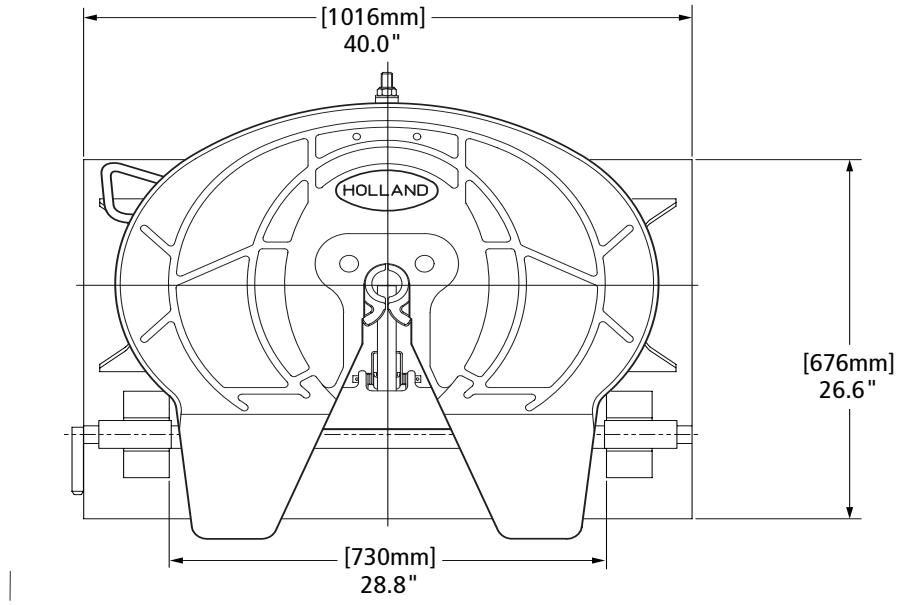

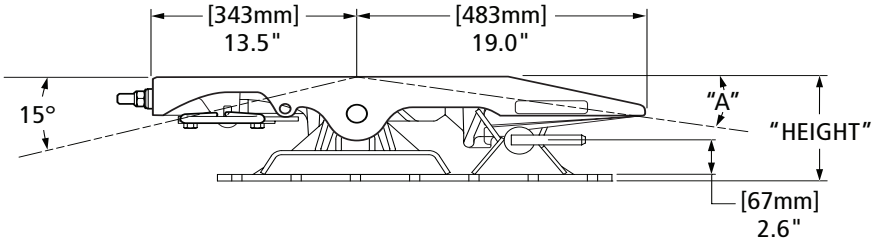

STANDARD OPTION CODES Replaces the Underscore (__) on the legacy part number.	
NUMBER CODE	DESCRIPTION
06	No-Tilt
34	Manual Secondary Lock and No-Tilt

INBOARD FW PART NUMBER*◊	HEIGHT IN [MM]	A	REPLACEMENT BRACKETS**	FW WEIGHT LBS [KG]
FW3500-8922XL06	7.7" [196]	9°	XA-8922	453.00 [205.48]

** See bracket section for more information.
*No Longer Available.
◊ For right-hand release fifth wheels, change "L" to "R" in part number.

NOTE: See Accessories Section for No-Tilt Kits. Not included in Replacement Bracket part number.

XL-FW10081PM-en-US Rev D 2016-03-01 Amendments and errors reserved. © SAF-HOLLAND, Inc.

pod® parts on demand

QUICK & EASY PARTS ONLINE

SEARCH

Parts Knowledge at the Tip of Your Finger



When it comes to parts, become your customers' go-to source with quick and accurate information just a click away.

SAF Holland

Holland

NEWAY

Contact us at 800.876.3929 to learn more

www.safholland.us

SAF Holland ORIGINAL PARTS™

FW3500 Sliding Traditional Outboard Mount

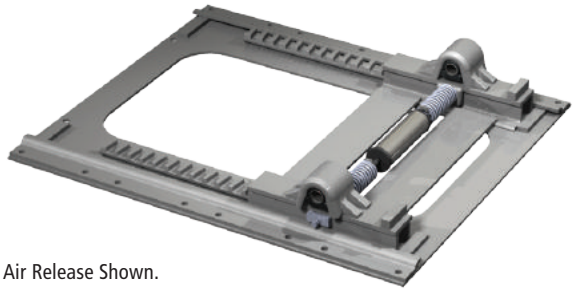

Air Release Shown.

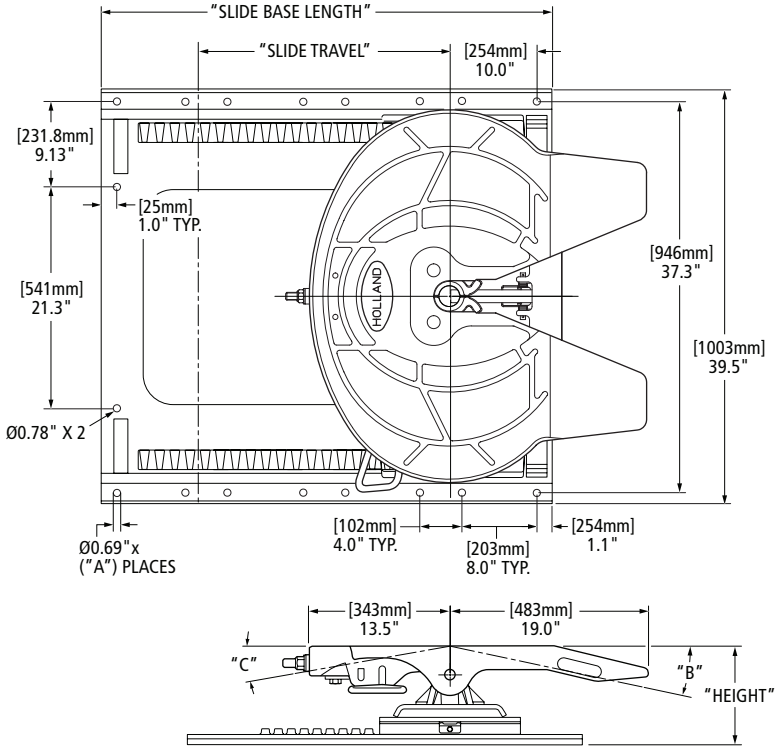

STANDARD OPTION CODES Replaces the Underscore (__) on the legacy part number.	
NUMBER CODE	DESCRIPTION
Blank	Standard, No Other Options
02	Manual Secondary Lock

LEGACY FW PART NUMBER*◊	SLIDE BRACKET TYPE	HEIGHT IN [MM]	SLIDE TRAVEL IN [MM]	SLIDE BASE LENGTH IN [MM]	A # OF HOLES	B	C	REPLACEMENT SLIDE BASE AND BRACKET**	REPLACEMENT SLIDE BASE**	REPLACEMENT BRACKETS**	FW WEIGHT LBS [KG]
FW2535-8003T1L__	Air Release	6.7" [170]	10.7" [272]	42.2" [1072]	16	11°†	5°	—	XA-07871-1L	XA-7003	503.00 [228.16]
FW2535-8003T2L__			16.8" [427]	50.2" [1275]	18			—	XA-07871-2L		526.00 [238.59]
FW2535-8003T3L__			24.5" [622]	55.2" [1402]	20			—	XA-07871-3L		546.00 [247.66]
FW2535-8003T4L__			41.3" [1049]	74.2" [1885]	26			—	XA-07871-4L		606.00 [274.88]
FW2535-8002T1L__		7.7" [196]	12.2" [310]	34.2" [869]	12	11°	19°	—	XA-07871-1	XA-7002	452.00 [205.02]
FW2535-8002T2L__			18.4" [467]	42.2" [1072]	16			—	XA-07871-2		478.00 [216.82]
FW2535-8002T3L__			24.5" [622]	46.2" [1173]	16			—	XA-07871-3		492.00 [223.17]
FW2535-8002T4L__			36.7" [932]	58.2" [1478]	20			—	XA-07871-4		532.00 [241.31]
FW2535-8002T5L__			48.9" [1242]	70.2" [1783]	24			—	XA-07871-5		572.00 [259.45]

◊ For right-hand release fifth wheels, change "L" to "R" in part number.
† If Option Code 47 Dimension Changes to 8°
* No longer available.
** See bracket section for more information.

XL-FW10081PM-en-US Rev D 2016-03-01 Amendments and errors reserved. © SAF-HOLLAND, Inc.

LEGACY FW PART NUMBER *◊	SLIDE BRACKET TYPE	HEIGHT IN [MM]	SLIDE TRAVEL IN [MM]	SLIDE BASE LENGTH IN [MM]	A # OF HOLES	B	C	REPLACEMENT SLIDE BASE AND BRACKET**	REPLACEMENT SLIDE BASE**	REPLACEMENT BRACKETS**	FW WEIGHT LBS [KG]
FW2535-8001T1L__	Air Release	8.7" [221]	12.2" [310]	34.2" [869]	12	17°	19°	—	XA-07871-1	XA-7001	457.00 [207.29]
FW2535-8001T2L__			18.4" [467]	42.2" [1072]	16			—	XA-07871-2		483.00 [219.09]
FW2535-8001T3L__			24.5" [622]	46.2" [1173]	16			—	XA-07871-3		497.00 [225.44]
FW2535-8001T4L__			36.7" [932]	58.2" [1478]	20			—	XA-07871-4		537.00 [243.58]
FW2535-8001T5L__			48.9" [1242]	70.2" [1783]	24			—	XA-07871-5		577.00 [261.72]
FW2535-8301T1L__		8.2" [208]	10.7" [272]	42.2" [1072]	16	16°	15°	XA-8311-T1	XA-07871-1L	XA-7301	509.00 [230.88]
FW2535-8301T2L__			16.8" [427]	50.2" [1275]	18			XA-8311-T2	XA-07871-2L		532.00 [241.31]
FW2535-8301T3L__			24.5" [622]	55.2" [1402]	20			XA-8311-T3	XA-07871-3L		552.00 [250.38]
FW2535-8301T4L__			41.3" [1049]	74.2" [1885]	26			XA-8311-T4	XA-07871-4L		612.00 [277.60]
FW2535-8009T2L__		10.2" [259]	13.8" [351]	42.2" [1072]	16	21°	22°	XA-8301-T1	XA-07871-2	XA-7009	515.00 [233.60]
FW2535-8009T3L__			19.9" [505]	46.2" [1173]	16			XA-8301-T2	XA-07871-3		528.00 [239.50]
FW2535-8009T4L__			32.1" [815]	58.2" [1478]	20			XA-8301-T3	XA-07871-4		568.00 [257.64]
FW2535-8009T5L__			44.4" [1128]	70.2" [1783]	24			XA-8301-T4	XA-07871-5		609.00 [276.24]
FW2535-8013T1L__	Manual Release	6.7" [170]	10.7" [272]	42.2" [1072]	16	11°†	5°	—	XA-07871-1L	XA-7013	464.00 [210.47]
FW2535-8013T2L__			16.8" [427]	50.2" [1275]	18			—	XA-07871-2L		490.00 [222.26]
FW2535-8013T3L__			24.5" [622]	55.2" [1402]	20			—	XA-07871-3L		536.00 [243.13]
FW2535-8013T4L__			41.3" [1049]	74.2" [1885]	26			—	XA-07871-4L		544.00 [246.75]
FW2535-8012T1L__		7.7" [196]	12.2" [310]	34.2" [869]	12	11°	11°	—	XA-07871-1	XA-7012	451.00 [204.57]
FW2535-8012T2L__			18.4" [467]	42.2" [1072]	16			—	XA-07871-2		477.00 [216.36]
FW2535-8012T3L__			24.5" [622]	46.2" [1173]	16			—	XA-07871-3		491.00 [222.71]
FW2535-8012T4L__			58.2" [1478]	36.7" [932]	20			—	XA-07871-4		531.00 [240.86]
FW2535-8012T5L__			48.8" [1240]	70.2" [1783]	24			—	XA-07871-5		571.00 [259.00]
FW2535-8011T1L__		8.7" [221]	12.2" [310]	34.2" [869]	12	17°	19°	—	XA-07871-1	XA-7011	457.00 [207.29]
FW2535-8011T2L__			18.4" [467]	42.2" [1072]	16			—	XA-07871-2		483.00 [219.09]
FW2535-8011T3L__			46.2" [1173]	24.5" [622]	16			—	XA-07871-3		497.00 [225.44]
FW2535-8011T4L__			36.7" [932]	58.2" [1478]	20			—	XA-07871-4		537.00 [243.58]
FW2535-8011T5L__			48.9" [1242]	70.2" [1783]	24			—	XA-07871-5		577.00 [261.72]
FW2535-8311T1L__		8.2" [208]	10.7" [272]	42.2" [1072]	16	16°	13°	XA-8311-T1	XA-07871-1L	XA-7311	502.00 [227.70]
FW2535-8311T2L__			16.8" [427]	50.2" [1275]	18			XA-8311-T2	XA-07871-2L		524.00 [237.68]
FW2535-8311T3L__			24.5" [622]	55.2" [1402]	20			XA-8311-T3	XA-07871-3L		544.00 [246.75]
FW2535-8311T4L__			41.3" [1049]	74.2" [1885]	26			XA-8311-T4	XA-07871-4L		604.00 [273.97]
FW2535-8019T2L__		10.2" [259]	13.8" [351]	42.2" [1072]	16	21°	21°	XA-8019-T2	XA-07871-2	XA-7019	514.00 [233.15]
FW2535-8019T3L__			19.9" [505]	46.2" [1173]	16			XA-8019-T3	XA-07871-3		528.00 [239.50]
FW2535-8019T4L__			32.1" [815]	58.2" [1478]	20			XA-8019-T4	XA-07871-4		568.00 [257.64]
FW2535-8019T5L__			44.4" [1128]	70.2" [1783]	24			XA-8019-T5	XA-07871-5		608.00 [275.78]

◊ For right-hand release fifth wheels, change "L" to "R" in part number.
† If Option Code 47 Dimension Changes to 8°
* No longer available.
** See bracket section for more information.

 Amendments and errors reserved. © SAF-HOLLAND, Inc.

FW3500 Sliding Traditional Inboard for Angle Mount

Also Available With Angle Later In This Section.

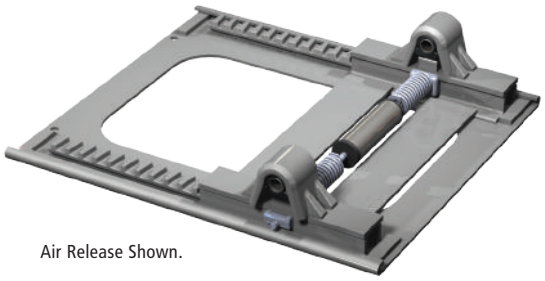

Air Release Shown.

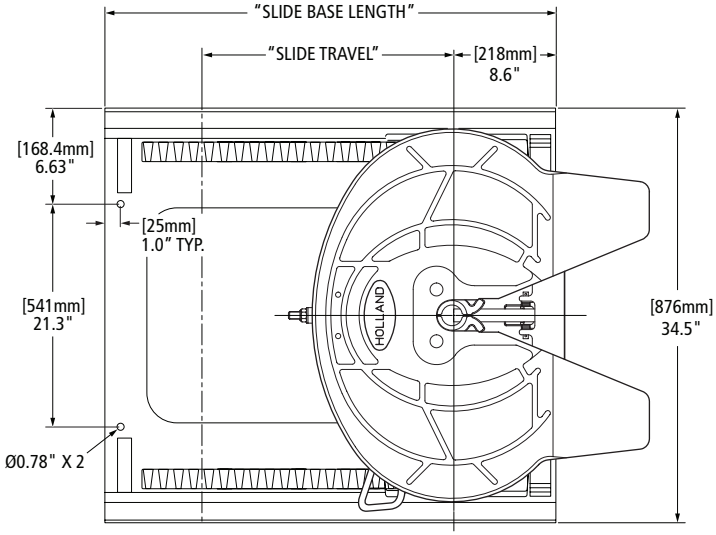

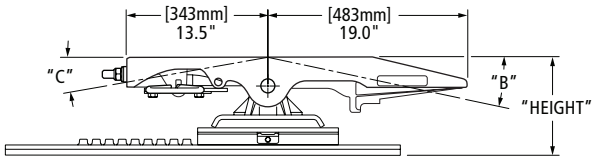

STANDARD OPTION CODES Replaces the Underscore (__) on the legacy part number.	
NUMBER CODE	**DESCRIPTION**
Blank	Standard, No Other Options
02	Manual Secondary Lock

LEGACY FW PART NUMBER*◊	SLIDE BRACKET TYPE	HEIGHT IN [MM]	SLIDE TRAVEL IN [MM]	SLIDE BASE LENGTH IN [MM]	B	C	REPLACEMENT SLIDE BASE AND BRACKET**	REPLACEMENT SLIDE BASE**	REPLACEMENT BRACKETS**	FW WEIGHT LBS [KG]
FW2535-7003X1L__	Air Release	6.7" [170]	10.7" [272]	38.9" [988]	11°	7°	—	XA-0751-1	XA-7003	464.00 [210.47]
FW2535-7003X2L__			16.8" [427]	45.0" [1143]			—	XA-0751-2		477.00 [216.36]
FW2535-7003X3L__			24.5" [622]	52.6" [1336]			—	XA-0751-3A		496.00 [224.98]
FW2535-7003X4L__			41.3" [1049]	69.5" [1765]			—	XA-0751-4		539.00 [244.49]
FW2535-7003X5L__			53.6" [1361]	82.0" [2082]			—	XA-0751-5		571.00 [259.00]
FW2535-7003X6L__			65.8" [1671]	94.0" [2387]			XA-7003-X6	XA-0751-6		602.00 [273.06]
FW2535-7002X1L__		7.7" [196]	12.2" [310]	32.8" [833]	14°	19°	—	XA-0750-1	XA-7002	456.00 [206.84]
FW2535-7002X2L__			18.4" [467]	38.9" [988]			—	XA-0750-2		484.00 [219.54]
FW2535-7002X3L__			24.5" [622]	45.0" [1143]			—	XA-0750-3		509.00 [230.88]
FW2535-7002X4L__			36.7" [932]	57.2" [1452]			—	XA-0750-4		562.00 [254.92]
FW2535-7002X5L__			48.9" [1242]	69.5" [1765]			—	XA-0750-5		615.00 [278.96]
FW2535-7002X6L__			61.2" [1554]	82.0" [2082]			XA-7002-X6	XA-0750-6		673.00 [305.27]
FW2535-7002X7L__			73.4" [1864]	94.0" [2387]			XA-7002-X7	XA-0750-7		475.00 [215.46]

◊ For right-hand release fifth wheels, change "L" to "R" in part number.
* No longer available.
** See bracket section for more information.

XL-FW10081PM-en-US Rev D 2016-03-01 Amendments and errors reserved. © SAF-HOLLAND, Inc.

LEGACY FW PART NUMBER*◊	SLIDE BRACKET TYPE	HEIGHT IN [MM]	SLIDE TRAVEL IN [MM]	SLIDE BASE LENGTH IN MM]	B	C	REPLACEMENT SLIDE BASE AND BRACKET**	REPLACEMENT SLIDE BASE**	REPLACEMENT BRACKETS**	FW WEIGHT LBS [KG]
FW2535-7001X1L__	Air Release	8.7" [221]	12.2" [310]	32.8" [833]	16°	19°	—	XA-0750-1	XA-7001	471.00 [213.64]
FW2535-7001X2L__			18.4" [467]	38.9" [988]			—	XA-0750-2		499.00 [226.34]
FW2535-7001X3L__			24.5" [622]	45.0" [1143]			—	XA-0750-3		523.00 [237.23]
FW2535-7001X4L__			36.7" [932]	57.2" [1452]			—	XA-0750-4		576.00 [261.27]
FW2535-7001X5L__			48.9" [1242]	69.5" [1765]			—	XA-0750-5		629.00 [285.31]
FW2535-7001X6L__			61.2" [1554]	82.0" [2082]			XA-7001-X6	XA-0750-6		688.00 [312.07]
FW2535-7301X1L__		8.2" [208]	10.7" [272]	38.9" [988]	16°	15°	XA-7301-X1	XA-0751-1	XA-7301	471.00 [213.64]
FW2535-7301X2L__			16.8" [427]	45.0" [1143]			XA-7301-X2	XA-0751-2		485.00 [219.99]
FW2535-7301X3L__			24.5" [622]	52.6" [1336]			XA-7301-X3	XA-0751-3A		514.00 [233.15]
FW2535-7301X4L__			41.3" [1049]	69.5" [1765]			XA-7301-X4	XA-0751-4		534.00 [242.22]
FW2535-7301X5L__			53.6" [1361]	82.0" [2082]			XA-7301-X5	XA-0751-5		579.00 [262.63]
FW2535-7301X6L__			65.8" [1671]	94.0" [2387]			XA-7301-X6	XA-0751-6		610.00 [276.69]
FW2535-7009X2L__		10.2" [259]	13.8" [351]	38.9" [988]	21°	22°	XA-7009-X2	XA-0750-2	XA-7009	510.00 [231.33]
FW2535-7009X3L__			19.9" [505]	45.0" [1143]			XA-7009-X3	XA-0750-3		535.00 [242.67]
FW2535-7009X4L__			32.1" [815]	57.2" [1452]			XA-7009-X4	XA-0750-4		587.00 [266.26]
FW2535-7009X5L__			44.4" [1128]	69.5" [1765]			XA-7009-X5	XA-0750-5		641.00 [290.75]
FW2535-7009X6L__			56.6" [1438]	82.0" [2082]			XA-7009-X6	XA-0750-6		727.00 [329.76]
FW2535-7013X1L__	Manual Release	6.7" [170]	10.7" [272]	38.9" [988]	11°	5°	—	XA-0751-1	XA-7013	455.00 [206.38]
FW2535-7013X2L__			16.8" [427]	45.0" [1143]			—	XA-0751-2		468.00 [212.28]
FW2535-7013X3L__			24.5" [622]	52.6" [1336]			—	XA-0751-3A		489.00 [221.81]
FW2535-7013X4L__			41.3" [1049]	69.5" [1765]			—	XA-0751-4		532.00 [241.31]
FW2535-7013X5L__			53.6" [1361]	82.0" [2082]			—	XA-0751-5		563.00 [255.37]
FW2535-7013X6L__			65.8" [1671]	94.0" [2387]			XA-7013-X6	XA-0751-6		594.00 [269.43]
FW2535-7012X1L__		7.7" [196]	12.2" [310]	32.8" [833]	14°	11°	—	XA-0750-1	XA-7012	465.00 [210.92]
FW2535-7012X2L__			18.4" [467]	38.9" [988]			—	XA-0750-2		493.00 [223.62]
FW2535-7012X3L__			24.5" [622]	45.0" [1143]			—	XA-0750-3		518.00 [234.96]
FW2535-7012X4L__			36.7" [932]	57.2" [1452]			—	XA-0750-4		571.00 [259.00]
FW2535-7012X5L__			48.9" [1242]	69.5" [1765]			—	XA-0750-5		624.00 [283.04]
FW2535-7012X6L__			61.2" [1554]	82.0" [2082]			XA-7012-X6	XA-0750-6		682.00 [309.35]
FW2535-7011X1L__		8.7" [221]	12.2" [310]	32.8" [833]	16°	19°	—	XA-0750-1	XA-7011	471.00 [213.64]
FW2535-7011X2L__			18.4" [467]	38.9" [988]			—	XA-0750-2		499.00 [226.34]
FW2535-7011X3L__			24.5" [622]	45.0" [1143]			—	XA-0750-3		524.00 [237.68]
FW2535-7011X4L__			36.7" [932]	57.2" [1452]			—	XA-0750-4		576.00 [261.27]
FW2535-7011X5L__			48.9" [1242]	69.5" [1765]			—	XA-0750-5		629.00 [285.31]
FW2535-7011X6L__			61.2" [1554]	82.0" [2082]			XA-7011-X6	XA-0750-6		688.00 [312.07]
FW2535-7311X1L__		8.2" [208]	10.7" [272]	38.9" [988]	16°	13°	XA-7311-X1	XA-0751-1	XA-7311	462.00 [209.56]
FW2535-7311X2L__			16.8" [427]	45.0" [1143]			XA-7311-X2	XA-0751-2		476.00 [215.91]
FW2535-7311X3L__			24.5" [622]	52.6" [1336]			XA-7311-X3	XA-0751-3A		494.00 [224.07]
FW2535-7311X4L__			41.3" [1049]	69.5" [1765]			XA-7311-X4	XA-0751-4		525.00 [238.14]
FW2535-7311X5L__			53.6" [1361]	82.0" [2082]			XA-7311-X5	XA-0751-5		570.00 [258.55]
FW2535-7311X6L__			65.8" [1671]	94.0" [2387]			XA-7311-X6	XA-0751-6		601.00 [272.61]
FW2535-7019X2L__		10.2" [259]	13.8" [351]	38.9" [988]	21°	21°	—	XA-0750-2	XA-7019	529.00 [239.95]
FW2535-7019X3L__			19.9" [505]	45.0" [1143]			—	XA-0750-3		554.00 [251.29]
FW2535-7019X4L__			32.1" [815]	57.2" [1452]			—	XA-0750-4		607.00 [275.33]
FW2535-7019X5L__			44.4" [1128]	69.5" [1765]			—	XA-0750-5		660.00 [299.37]
FW2535-7019X6L__			56.6" [1438]	82.0" [2082]			—	XA-0750-6		718.00 [325.68]

◊ For right-hand release fifth wheels, change "L" to "R" in part number.
* No longer available.
** See bracket section for more information.

 Amendments and errors reserved. © SAF-HOLLAND, Inc.

FW3500 Sliding Traditional
No Tilt Outboard Mount

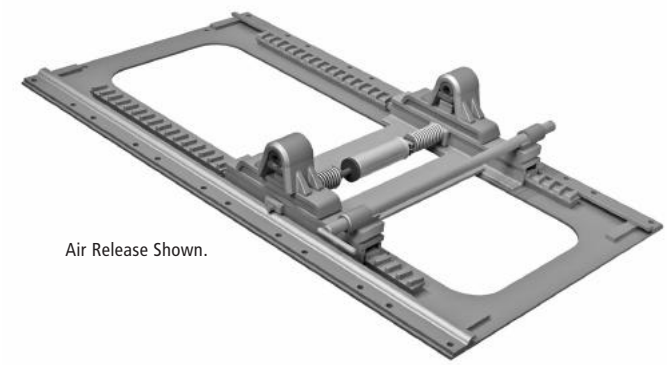

Air Release Shown.

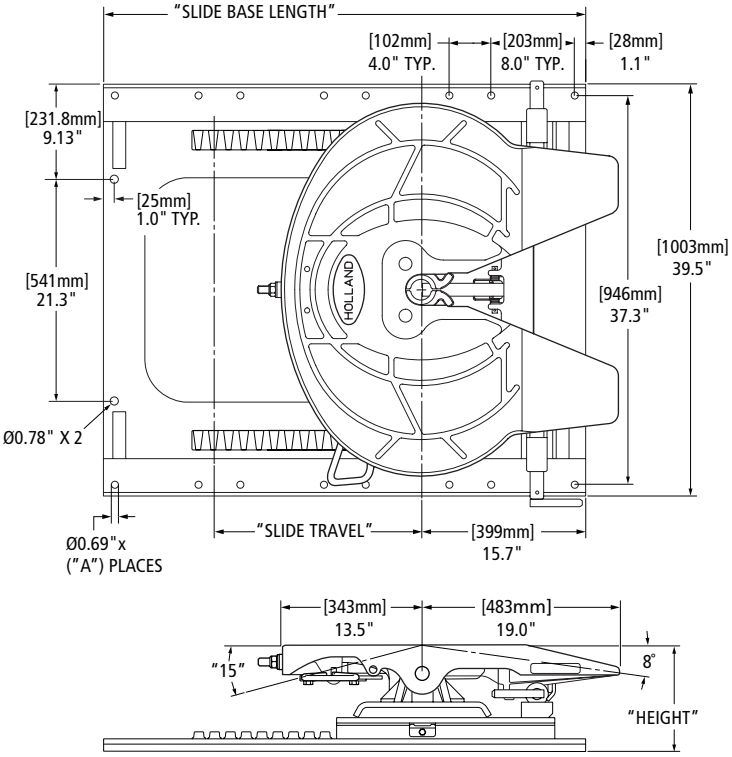

PART NUMBER*◊	SLIDE BRACKET TYPE	HEIGHT IN [MM]	SLIDE TRAVEL IN [MM]	SLIDE BASE LENGTH IN [MM]	A # OF HOLES	REPLACEMENT SLIDE BASE AND BRACKET**	REPLACEMENT SLIDE BASE**	REPLACEMENT BRACKET **	FW WEIGHT LBS [KG]
FW2535-8401T2L06	Air Release	8.6" [218]	13.8" [351]	42.2" [1072]	16	XA-8401-T2	XA-07871-2	XA-7401	550.00 [249.48]
FW2535-8401T3L06			19.9" [505]	46.2" [1173]	16	XA-8401-T3	XA-07871-3		563.00 [255.37]
FW2535-8401T4L06			32.1" [815]	58.2" [1478]	20	XA-8401-T4	XA-07871-4		603.00 [273.52]
FW2535-8401T5L06			44.4" [1128]	70.2" [1783]	24	XA-8401-T5	XA-07871-5		643.00 [291.66]
FW2535-8409T2L06		10.1" [257]	13.8" [351]	42.2" [1072]	16	XA-8409-T2	XA-07871-2	XA-7409	577.00 [261.72]
FW2535-8409T3L06			19.9" [505]	46.2" [1173]	16	XA-8409-T3	XA-07871-3		591.00 [268.07]
FW2535-8409T4L06			32.1" [815]	58.2" [1478]	20	XA-8409-T4	XA-07871-4		631.00 [286.22]
FW2535-8409T5L06			44.4" [1128]	70.2" [1783]	24	XA-8409-T5	XA-07871-5		671.00 [304.36]
FW2535-8411T2L06	Manual Release	8.6" [218]	13.8" [351]	42.2" [1072]	16	XA-8411-T2	XA-07871-2	XA-7411	550.00 [249.48]
FW2535-8411T3L06			19.9" [505]	46.2" [1173]	16	XA-8411-T3	XA-07871-3		563.00 [255.37]
FW2535-8411T4L06			32.1" [815]	58.2" [1478]	20	XA-8411-T4	XA-07871-4		603.00 [273.52]
FW2535-8411T5L06			44.4" [1128]	70.2" [1783]	24	XA-8411-T5	XA-07871-5		643.00 [291.66]
FW2535-8419T2L06		10.1" [257]	13.8" [351]	42.2" [1072]	16	XA-8419-T2	XA-07871-2	XA-7419	577.00 [261.72]
FW2535-8419T3L06			19.9" [505]	46.2" [1173]	16	XA-8419-T3	XA-07871-3		591.00 [268.07]
FW2535-8419T4L06			32.1" [815]	58.2" [1478]	20	XA-8419-T4	XA-07871-4		631.00 [286.22]
FW2535-8419T5L06			44.4" [1128]	70.2" [1783]	24	XA-8419-T5	XA-07871-5		671.00 [304.36]

◊ For right-hand release fifth wheels, change "L" to "R" in part number.
* No longer available.
** See bracket section for more information.

NOTE: See Accessories Section for No-Tilt Kits. Not included in Replacement Bracket part number.

XL-FW10081PM-en-US Rev D 2016-03-01 Amendments and errors reserved. © SAF-HOLLAND, Inc.

FW3500 Sliding Traditional No Tilt Inboard for Angle Mount

Also Available With Angle Later In This Section

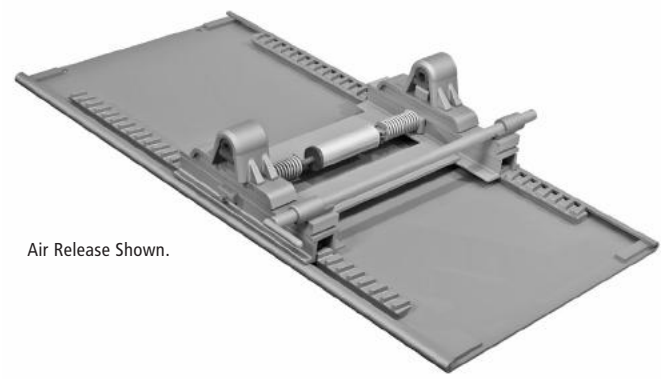

Air Release Shown.

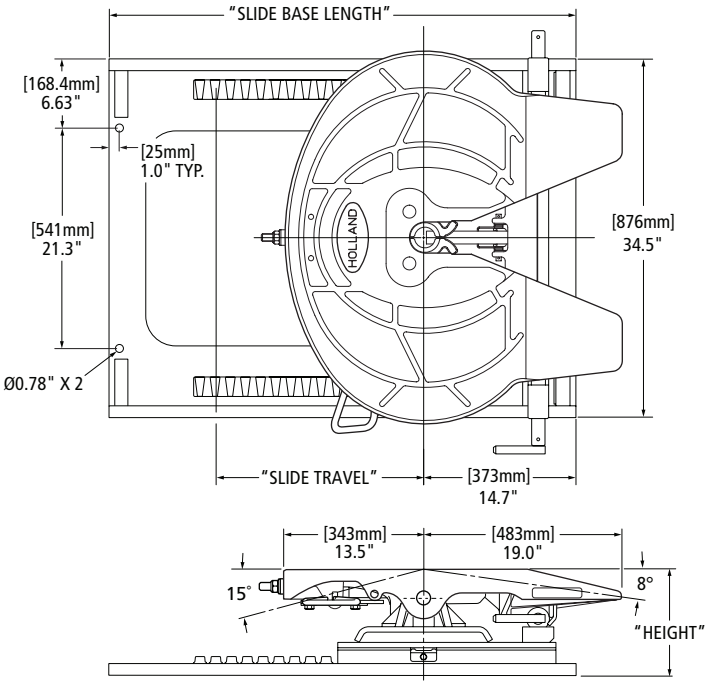

PART NUMBER*◊	SLIDE BRACKET TYPE	HEIGHT IN [MM]	SLIDE TRAVEL IN [MM]	SLIDE BASE LENGTH IN [MM]	REPLACEMENT SLIDE BASE**	REPLACEMENT BRACKET **	FW WEIGHT LBS [KG]
FW2535-7401X2L06	Air Release	8.6" [218]	13.9" [353]	45.0" [1143]	XA-0751-2	XA-7401	509.00 [230.88]
FW2535-7401X3L06			20.0" [508]	57.2" [1452]	XA-0751-3		524.00 [237.68]
FW2535-7401X4L06			32.2" [818]	69.5" [1765]	XA-0751-4		496.00 [224.98]
FW2535-7401X5L06			44.4" [1128]	82.0" [2082]	XA-0751-5		524.00 [237.68]
FW2535-7401X6L06			56.7" [1440]	94.0" [2387]	XA-0751-6		499.00 [226.34]
FW2535-7409X2L06		10.1" [257]	13.9" [353]	45.0" [1143]	XA-0751-2	XA-7409	586.00 [265.81]
FW2535-7409X3L06			20.0" [508]	57.2" [1452]	XA-0751-3		604.00 [273.97]
FW2535-7409X4L06			32.2" [818]	69.5" [1765]	XA-0751-4		645.00 [292.57]
FW2535-7409X5L06			44.4" [1128]	82.0" [2082]	XA-0751-5		701.00 [317.97]
FW2535-7409X6L06			56.7" [1440]	94.0" [2387]	XA-0751-6		751.00 [340.65]
FW2535-7411X2L06	Manual Release	8.6" [218]	13.9" [353]	45.0" [1143]	XA-0751-2	XA-7411	509.00 [230.88]
FW2535-7411X3L06			20.0" [508]	57.2" [1452]	XA-0751-3		524.00 [237.68]
FW2535-7411X4L06			32.2" [818]	69.5" [1765]	XA-0751-4		496.00 [224.98]
FW2535-7411X5L06			44.4" [1128]	82.0" [2082]	XA-0751-5		524.00 [237.68]
FW2535-7411X6L06			56.7" [1440]	94.0" [2387]	XA-0751-6		499.00 [226.34]
FW2535-7419X2L06		10.1" [257]	13.9" [353]	45.0" [1143]	XA-0751-2	XA-7419	586.00 [265.81]
FW2535-7419X3L06			20.0" [508]	57.2" [1452]	XA-0751-3		604.00 [273.97]
FW2535-7419X4L06			32.2" [818]	69.5" [1765]	XA-0751-4		645.00 [292.57]
FW2535-7419X5L06			44.4" [1128]	82.0" [2082]	XA-0751-5		701.00 [317.97]
FW2535-7419X6L06			56.7" [1440]	94.0" [2387]	XA-0751-6		751.00 [340.65]

◊ For right-hand release fifth wheels, change "L" to "R" in part number.
* No longer available.
** See bracket section for more information.

NOTE: See Accessories Section for No-Tilt Kits. Not included in Replacement Bracket part number.

 Amendments and errors reserved. © SAF-HOLLAND, Inc.

FW3500 Stationary Kompensator Outboard Plate Mount



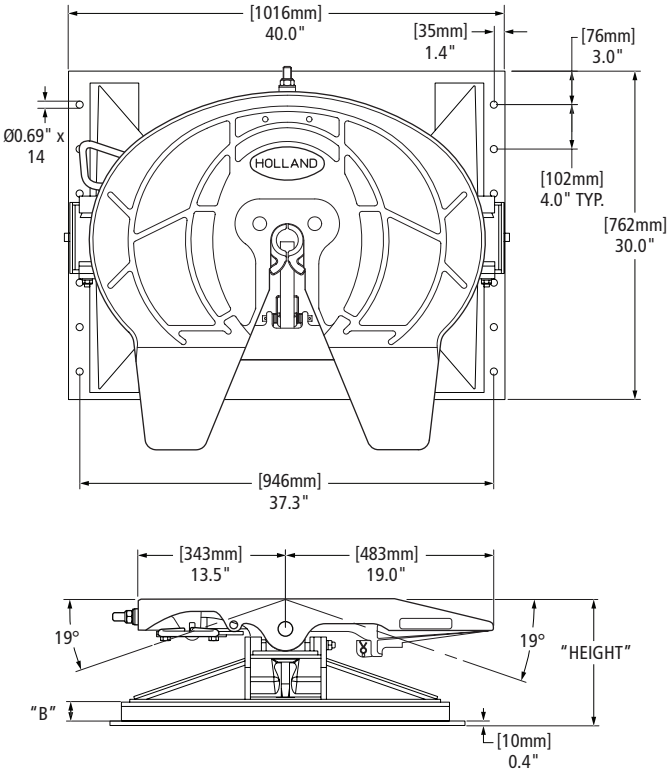

STANDARD OPTION CODES Replaces the Underscore (__) on the legacy part number.	
NUMBER CODE	DESCRIPTION
Blank	Standard, No Other Options
02	Manual Secondary Lock

PART NUMBER*◊	HEIGHT IN [MM]	B	REPLACEMENT BRACKET**	FW WEIGHT LBS [KG]
FW3540-7726XL__	12.9" [328]	3.00"	XA-40-7726	649.00 [294.38]
FW3540-7727XL__	11.9" [302]	2.0"	XA-40-7727	640.00 [290.30]
FW3540-7729XL__	9.9" [251]	— +	XA-40-7729	575.00 [260.82]

◊ For right-hand release fifth wheels, change "L" to "R" in part number.
* No longer available.
+ Kompensator frame is mounted directly to plate, and extends 1.17" below bottom of plate.
** See bracket section for more information.

FW3500 Stationary Kompensator Inboard Plate Mount for Angle Mounting



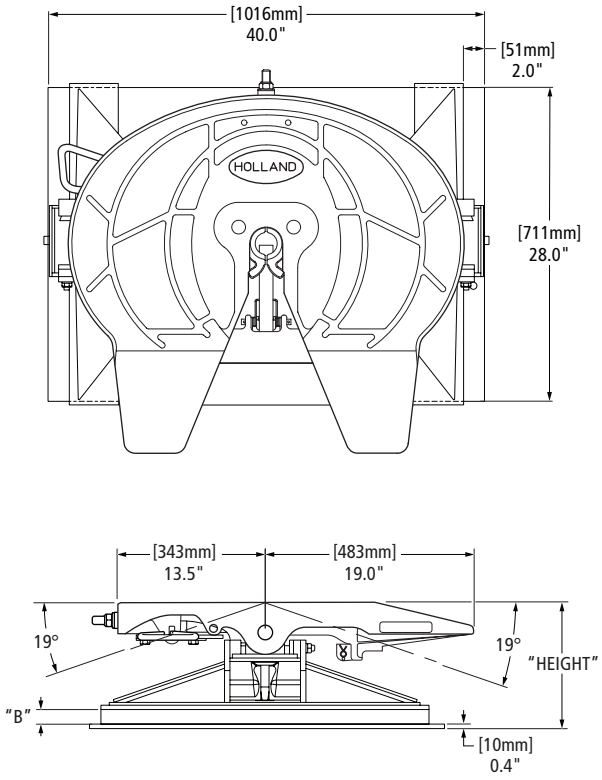

STANDARD OPTION CODES Replaces the Underscore (__) on the legacy part number.	
NUMBER CODE	DESCRIPTION
Blank	Standard, No Other Options
02	Manual Secondary Lock

PART NUMBER*◊	HEIGHT IN [MM]	B	REPLACEMENT BRACKET**	FW WEIGHT LBS [KG]
FW3540-7721XL__	12.9" [328]	3.0"	XA-40-7724	643.00 [291.66]
FW3540-7722XL__	11.9" [302]	2.0"	XA-40-7722	632.00 [286.67]
FW3540-7723XL__	9.9" [251]	— +	XA-40-7723	657.00 [298.01]

◊ For right-hand release fifth wheels, change "L" to "R" in part number.
* No longer available.
+ Kompensator frame is mounted directly to plate, and extends 1.17" below bottom of plate.
** See bracket section for more information.

XL-FW10081PM-en-US Rev D 2016-03-01 Amendments and errors reserved. © SAF-HOLLAND, Inc.

FW3500 Stationary Kompensator Inboard for Angle Mount

Also Available With Angle Later In This Section.



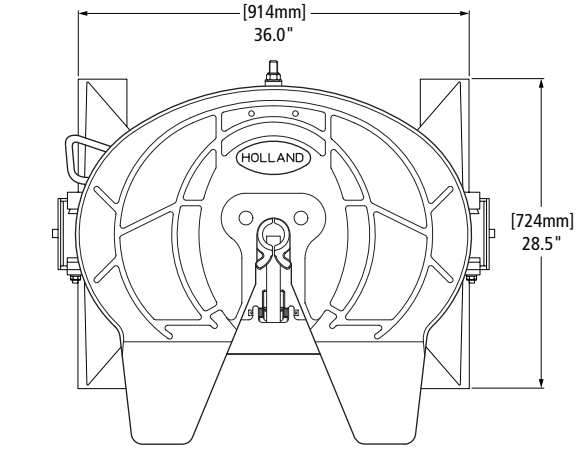

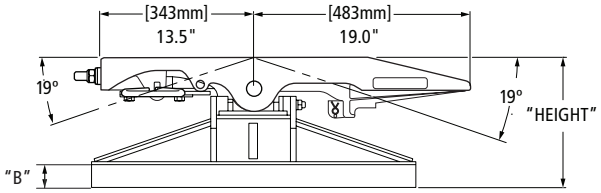

STANDARD OPTION CODES Replaces the Underscore (__) on the legacy part number.	
NUMBER CODE	DESCRIPTION
Blank	Standard, No Other Options
02	Manual Secondary Lock

PART NUMBER*◊	HEIGHT IN [MM]	B	REPLACEMENT BRACKET**	FW WEIGHT LBS [KG]
FW3540-7701XL__	12.5" [318]	3.0"	XA-40-7701	523.00 [237.23]
FW3540-7702XL__	11.5" [292]	2.0"	XA-40-7702	513.00 [232.69]
FW3540-7703XL__	9.5" [241]	— +	XA-40-7703	469.00 [212.73]

◊ For right-hand release fifth wheels, change "L" to "R" in part number.
* No longer available.
+ Kompensator frame is mounted directly to plate, and extends 1.17" below bottom of plate.
** See bracket section for more information.

FW3500 Sliding Kompensator Inboard for Angle Mount



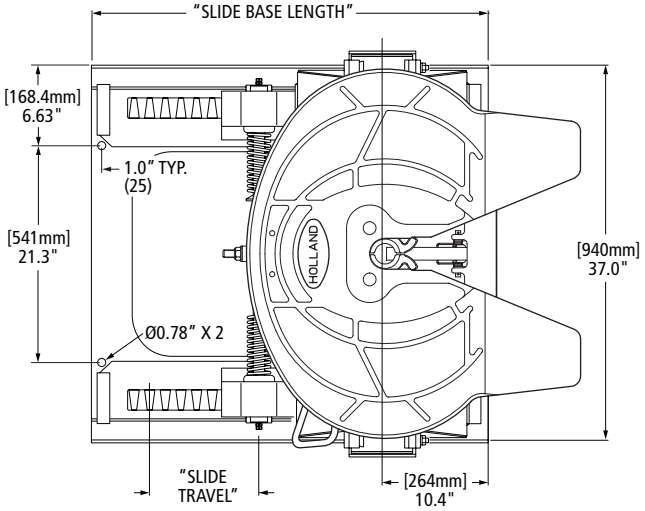

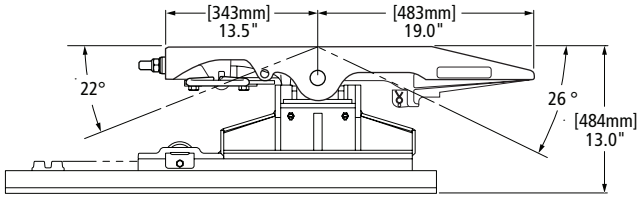

STANDARD OPTION CODES Replaces the Underscore (__) on the legacy part number.	
NUMBER CODE	DESCRIPTION
Blank	Standard, No Other Options
02	Manual Secondary Lock

PART NUMBER*◊	SLIDE TRAVEL IN [MM]	SLIDE LENGTH IN [MM]	REPLACEMENT SLIDE BASE**	REPLACEMENT BRACKET**	FW WEIGHT LBS [KG]
FW3590-7201X1L__	10.7" [272]	38.9" [988]	XA-0284-1	XA-7201	752.00 [341.10]
FW3590-7201X2L__	16.8" [427]	45.0" [1143]	XA-0284-2		771.00 [349.72]
FW3590-7201X3L__	24.5" [622]	52.6" [1336]	XA-0284-3A		828.00 [375.57]
FW3590-7201X4L__	41.3" [1049]	69.5" [1765]	XA-0284-4		912.00 [413.68]
FW3590-7201X5L__	53.6" [1361]	82.0" [2082]	XA-0284-5		986.00 [447.24]
FW3590-7201X6L__	65.8" [1671]	94.0" [2387]	XA-0284-6		1051.00 [476.73]

◊ For right-hand release fifth wheels, change "L" to "R" in part number.
* No longer available.
** See bracket section for more information.

 Amendments and errors reserved. © SAF-HOLLAND, Inc.

FW3500 Stationary Brackets with Angle Mount



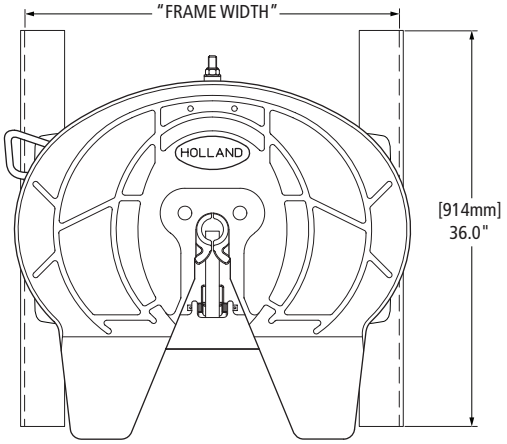

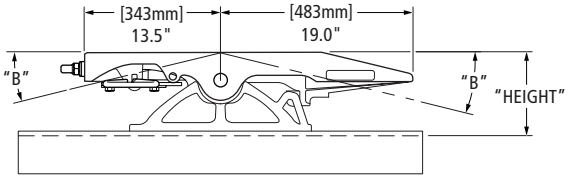

Frame width "A-G": .38" x 4" x 4" angle dimensions
"H-N": .38" x 4" x 6" angle dimensions

STANDARD OPTION CODES Replaces the Underscore (__) on the legacy part number.	
NUMBER CODE	**DESCRIPTION**
Blank	Standard, No Other Options
02	Manual Secondary Lock

FW PART NUMBER FABRICATED*◊	HEIGHT IN [MM]	B	REPLACEMENT BRACKETS**	FW WEIGHT LBS [KG]
FW3500-7814GL__	5.6" [142]	8°	RK-W600-G	329.00 [149.23]
FW3500-7813GL__	6.6" [168]	11°	RK-W700-G	334.00 [151.50]
FW3500-7812GL__	7.6" [193]	14°	RK-W800-G	339.00 [153.77]
FW3500-7811GL__	8.6" [218]	17°	RK-W900-G	344.00 [156.04]
FW3500-7553GL__	10.5" [318]	15°	XA-7553-G	339.00 [153.77]
FW3500-7552GL__	10.5" [318]	15°	XA-7552-G	375.00 [170.10]
FW3500-7551GL__	12.5" [318]	15°	XA-7551-G	382.00 [173.27]

◊ For right-hand release fifth wheels, change "L" to "R" in part number.
* No longer available.
** See bracket section for more information.

FRAME WIDTH CODE CHART					
CODE	**FRAME WIDTH IN [MM]**	**CODE**	**FRAME WIDTH IN [MM]**	**CODE**	**FRAME WIDTH IN [MM]**
A	33.25" [845]	F	33.88" [861]	L	34.50" [876]
B	33.38" [848]	**G†**	**34.00" [864]**	M	34.62" [879]
C	33.50" [851]	H	34.12" [867]	N	34.75" [883]
D	33.62" [854]	J	34.25"[870]		
E	33.75" [857]	K	34.38" [873]		

† Standard

XL-FW10081PM-en-US Rev D 2016-03-01 Amendments and errors reserved. © SAF-HOLLAND, Inc.

FW3500 Stationary No Tilt Inboard with Angle Mount

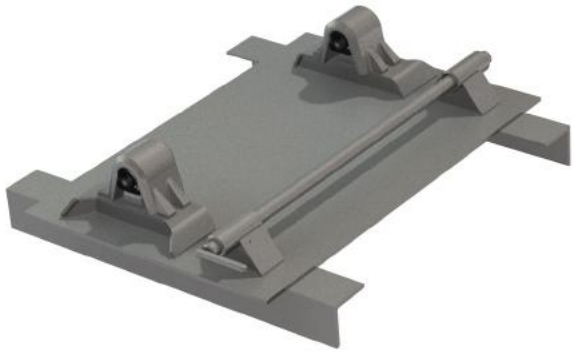

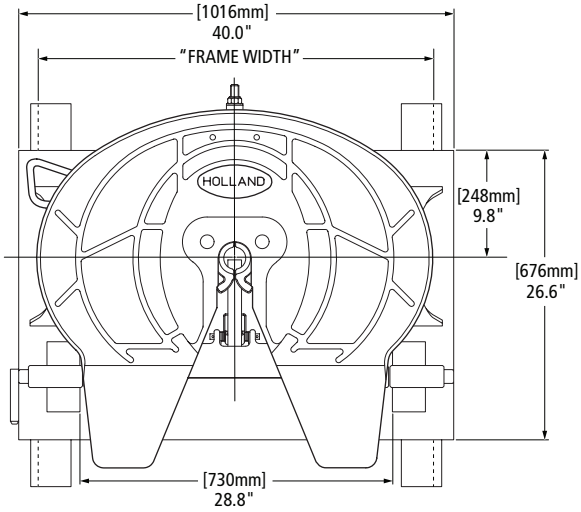

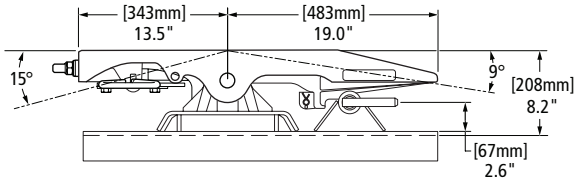

"Angle size" see chart.

FW PART NUMBER*◊	FRAME WIDTH IN [MM]	ANGLE SIZE	REPLACEMENT BRACKET**	FW WEIGHT LBS [KG]
FW3500-8922AL06	33.25" [845]	.38" x 4" x 4"	XA-08408-A	506.00 [229.52]
FW3500-8922BL06	33.38" [848]		XA-08408-B	507.00 [229.97]
FW3500-8922CL06	33.50" [851]		XA-08408-C	507.00 [229.97]
FW3500-8922DL06	33.62" [854]		XA-08408-D	508.00 [230.42]
FW3500-8922EL06	33.75" [857]		XA-08408-E	508.00 [230.42]
FW3500-8922FL06	33.88" [861]		XA-08408-F	509.00 [230.88]
FW3500-8922GL06	34.00" [864]		XA-08408-G	509.00 [230.88]
FW3500-8922HL06	34.12" [867]		XA-08408-H	510.00 [231.33]
FW3500-8922JL06	34.25" [870]		XA-08408-J	510.00 [231.33]
FW3500-8922KL06	34.38" [873]		XA-08408-K	511.00 [231.79]
FW3500-8922LL06	34.50" [876]		XA-08408-L	512.00 [232.24]
FW3500-8922AL65	33.25" [845]	.31" x 4" x 4"	XA-08408-A-65	495.00 [224.53]
FW3500-8922BL65	33.38" [848]		XA-08408-B-65	496.00 [224.98]
FW3500-8922CL65	33.50" [851]		XA-08408-C-65	496.00 [224.98]
FW3500-8922DL65	33.62" [854]		XA-08408-D-65	497.00 [225.44]
FW3500-8922EL65	33.75" [857]		XA-08408-E-65	497.00 [225.44]
FW3500-8922FL65	33.88" [861]		XA-08408-F-65	498.00 [225.89]
FW3500-8922GL65	34.00" [864]		XA-08408-G-65	498.00 [225.89]
FW3500-8922HL65	34.12" [867]		XA-08408-H-65	499.00 [226.34]
FW3500-8922JL65	34.25" [870]		XA-08408-J-65	499.00 [226.34]
FW3500-8922KL65	34.38" [873]		XA-08408-K-65	500.00 [226.80]
FW3500-8922LL65	34.50" [876]		XA-08408-L-65	500.00 [226.80]

◊ For right-hand release fifth wheels, change "L" to "R" in part number.
* No longer available.
** See bracket section for more information.

NOTE: See Accessories Section for No-Tilt Kits. Not included in Replacement Bracket part number.

 Amendments and errors reserved. © SAF-HOLLAND, Inc.

FW3500 Sliding Traditional No Tilt Inboard with Angle Mount



Air Release Shown.

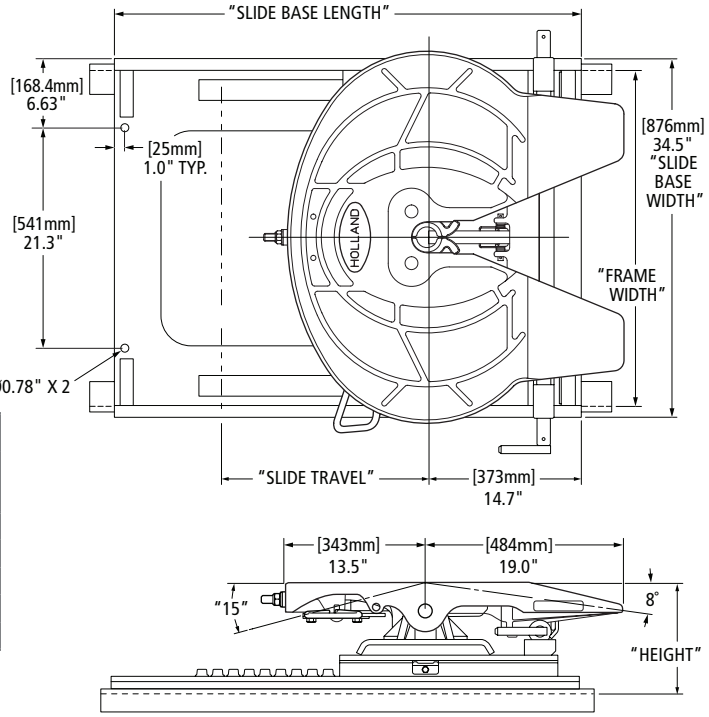

FRAME WIDTH CODE CHART					
CODE	FRAME WIDTH IN [MM]	CODE	FRAME WIDTH IN [MM]	CODE	FRAME WIDTH IN [MM]
A	33.25" [845]	F	33.88" [861]	M	34.62" [879]
B	33.38" [848]	**G†**	**34.00" [864]**	N	34.75" [883]
C	33.50" [851]	H	34.12" [867]	P	34.88" [886]
D	33.62" [854]	K	34.38" [873]	Q	35.00" [889]
E	33.75" [857]	L	34.50" [876]		

† Standard

STANDARD OPTION CODES Replaces the Underscore (__) on the legacy part number.	
NUMBER CODE	DESCRIPTION
06	Standard No-Tilt, No Other Options
51	.38" x 4" x 6" Angle

Frame width "A-Q": .38" x 4" x 4" angle dimensions
See option codes for other options.

PART NUMBER*◊	SLIDE BRACKET TYPE	HEIGHT IN [MM]	SLIDE TRAVEL IN [MM]	SLIDE BASE LENGTH IN [MM]	REPLACEMENT SLIDE BASE AND BRACKET**	REPLACEMENT SLIDE BASE**	REPLACEMENT BRACKET **	FW WEIGHT LBS [KG]
FW2535-7401G2L06	AIR RELEASE	9.0" [229]	13.9" [353]	38.9" [988]	XA-7401-G2-__	XA-0752-G2-__	XA-7401	620.00 [281.23]
FW2535-7401G3L06			20.0" [508]	45.0" [1143]	XA-7401-G3-__	XA-0752-G3-__		658.00 [298.46]
FW2535-7401G4L06			32.2" [818]	57.2" [1452]	XA-7401-G4-__	XA-0752-G4-__		730.00 [331.12]
FW2535-7401G5L06			44.4" [1128]	69.5" [1765]	XA-7401-G5-__	XA-0752-G5-__		795.00 [360.61]
FW2535-7401G6L06			56.7" [1440]	82.0" [2082]	XA-7401-G6-__	XA-0752-G6-__		866.00 [392.81]
FW2535-7409G2L06		10.9" [277]	13.9" [353]	38.9" [988]	XA-7409-G2-__	XA-0752-G2-__	XA-7409	628.00 [284.86]
FW2535-7409G3L06			20.0" [508]	45.0" [1143]	XA-7409-G3-__	XA-0752-G3-__		666.00 [302.09]
FW2535-7409G4L06			32.2" [818]	57.2" [1452]	XA-7409-G4-__	XA-0752-G4-__		738.00 [334.75]
FW2535-7409G5L06			44.4" [1128]	69.5" [1765]	XA-7409-G5-__	XA-0752-G5-__		803.00 [364.23]
FW2535-7409G6L06			56.7" [1440]	82.0" [2082]	XA-7409-G6-__	XA-0752-G6-__		874.00 [396.44]
FW2535-7411G2L06	MANUAL RELEASE	9.0" [229]	13.9" [353]	38.9" [988]	XA-7411-G2-__	XA-0752-G2-__	XA-7411	625.00 [283.50]
FW2535-7411G3L06			20.0" [508]	45.0" [1143]	XA-7411-G3-__	XA-0752-G3-__		663.00 [300.73]
FW2535-7411G4L06			32.2" [818]	57.2" [1452]	XA-7411-G4-__	XA-0752-G4-__		735.00 [333.39]
FW2535-7411G5L06			44.4" [1128]	69.5" [1765]	XA-7411-G5-__	XA-0752-G5-__		800.00 [362.87]
FW2535-7411G6L06			56.7" [1440]	82.0" [2082]	XA-7411-G6-__	XA-0752-G6-__		871.00 [395.08]
FW2535-7419G2L06		10.9" [277]	13.9" [353]	38.9" [988]	XA-7419-G2-__	XA-0752-G2-__	XA-7419	633.00 [287.12]
FW2535-7419G3L06			20.0" [508]	45.0" [1143]	XA-7419-G3-__	XA-0752-G3-__		671.00 [304.36]
FW2535-7419G4L06			32.2" [818]	57.2" [1452]	XA-7419-G4-__	XA-0752-G4-__		743.00 [337.02]
FW2535-7419G5L06			44.4" [1128]	69.5" [1765]	XA-7419-G5-__	XA-0752-G5-__		808.00 [366.50]
FW2535-7419G6L06			56.7" [1440]	82.0" [2082]	XA-7419-G6-__	XA-0752-G6-__		879.00 [398.71]

◊ For right-hand release fifth wheels, change "L" to "R" in part number.
* No longer available.
** See bracket section for more information.

NOTE: See Accessories Section for No-Tilt Kits. Not included in Replacement Bracket part number.

XL-FW10081PM-en-US Rev D 2016-03-01 Amendments and errors reserved. © SAF-HOLLAND, Inc.

THIS PAGE INTENTIONALLY LEFT BLANK

 Amendments and errors reserved. © SAF-HOLLAND, Inc.

FW3500 Sliding Traditional Inboard with Angle Mount

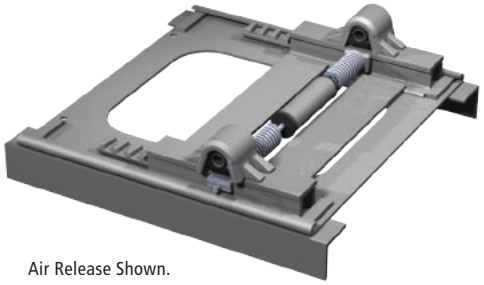

Air Release Shown.

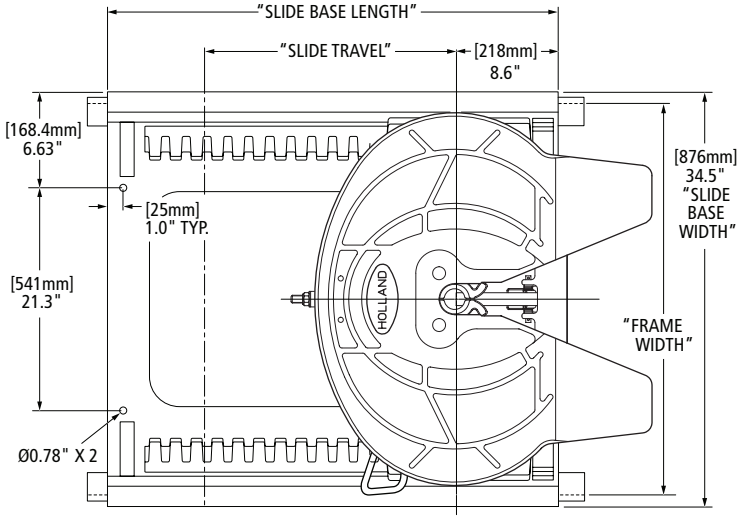

FRAME WIDTH CODE CHART					
CODE	FRAME WIDTH IN [MM]	CODE	FRAME WIDTH IN [MM]	CODE	FRAME WIDTH IN [MM]
A	33.25" [845]	F	33.88" [861]	M	34.62" [879]
B	33.38" [848]	**G†**	**34.00" [864]**	N	34.75" [883]
C	33.50" [851]	H	34.12" [867]	P	34.88" [886]
D	33.62" [854]	K	34.38" [873]	Q	35.00" [889]
E	33.75" [857]	L	34.50" [876]		

† Standard

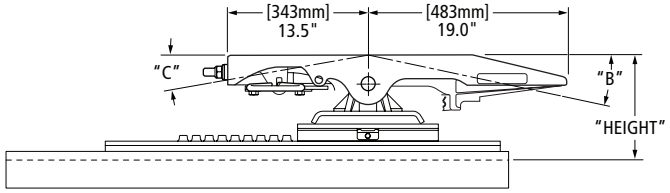

Frame Width "A-L": .38" x 4" x 4" angle dimensions
"M-Q": .38" x 5" x 5" angle dimensions (Option Code 21)

STANDARD OPTION CODES Replaces the Underscore (__) on the legacy part number.	
NUMBER CODE	DESCRIPTION
Blank	Standard, No Other Options
02	Manual Secondary Lock
21	.38 x 5" x 5" Angle

LEGACY FW PART NUMBER*◊	SLIDE BRACKET TYPE	HEIGHT IN [MM]	SLIDE TRAVEL IN [MM]	SLIDE BASE LENGTH IN [MM]	B	C	REPLACEMENT SLIDE BASE**	REPLACEMENT BRACKET**	FW WEIGHT LBS [KG]
FW2535-7003G1L__	AIR RELEASE	7.1" [180]	10.7" [272]	38.9" [988]	11°	7°	XA-0753-G1-__	XA-7003	531.00 [240.86]
FW2535-7003G2L__			16.8" [427]	45.0" [1143]			XA-0753-G2-__		555.00 [251.74]
FW2535-7003G3L__			24.5" [622]	52.6" [1336]			XA-0753-G3-__		588.00 [266.71]
FW2535-7003G4L__			41.3" [1049]	69.5" [1765]			XA-0753-G4-__		646.00 [293.02]
FW2535-7003G5L__			53.6" [1361]	82.0" [2082]			XA-0753-G5-__		727.00 [329.76]
FW2535-7003G6L__			65.8" [1671]	94.0" [2387]			XA-0753-G6-__		802.00 [363.78]
FW2535-7002G1L__		8.1" [206]	12.2" [310]	32.8" [833]	14°	19°	XA-0753-G1-__	XA-7002	524.00 [237.68]
FW2535-7002G2L__			18.4" [467]	38.9" [988]			XA-0753-G2-__		573.00 [259.91]
FW2535-7002G3L__			24.5" [622]	45.0" [1143]			XA-0753-G3-__		595.00 [269.89]
FW2535-7002G4L__			36.7" [932]	57.2" [1452]			XA-0753-G4-__		667.00 [302.55]
FW2535-7002G5L__			48.9" [1242]	69.5" [1765]			XA-0753-G5-__		742.00 [336.57]
FW2535-7002G6L__			61.2" [1554]	82.0" [2082]			XA-0753-G6-__		813.00 [368.77]

◊ For right-hand release fifth wheels, change "L" to "R" in part number.
* No longer available.
** See bracket section for more information.

XL-FW10081PM-en-US Rev D 2016-03-01 Amendments and errors reserved. © SAF-HOLLAND, Inc.

LEGACY FW PART NUMBER*◊	SLIDE BRACKET TYPE	HEIGHT IN [MM]	SLIDE TRAVEL IN [MM]	SLIDE BASE LENGTH IN [MM]	B	C	REPLACEMENT SLIDE BASE**	REPLACEMENT BRACKET**	FW WEIGHT LBS [KG]
FW2535-7001G1L__	AIR RELEASE	9.1" [231]	12.2" [310]	32.8" [833]	16°	19°	XA-0753-G1-__	XA-7001	529.00 [239.95]
FW2535-7001G2L__			18.4" [467]	38.9" [988]			XA-0753-G2-__		578.00 [262.18]
FW2535-7001G3L__			24.5" [622]	45.0" [1143]			XA-0753-G3-__		600.00 [272.16]
FW2535-7001G4L__			36.7" [932]	57.2" [1452]			XA-0753-G4-__		672.00 [304.81]
FW2535-7001G5L__			48.9" [1242]	69.5" [1765]			XA-0753-G5-__		747.00 [338.83]
FW2535-7001G6L__			61.2" [1554]	82.0" [2082]			XA-0753-G6-__		818.00 [371.04]
FW2535-7301G1L__		8.6" [218]	10.7" [272]	38.9" [988]	16°	15°	XA-0753-G1-__	XA-7301	539.00 [244.49]
FW2535-7301G2L__			16.8" [427]	45.0" [1143]			XA-0753-G2-__		563.00 [255.37]
FW2535-7301G3L__			24.5" [622]	52.6" [1336]			XA-0753-G3-__		596.00 [270.34]
FW2535-7301G4L__			41.3" [1049]	69.5" [1765]			XA-0753-G4-__		645.00 [292.57]
FW2535-7301G5L__			53.6" [1361]	82.0" [2082]			XA-0753-G5-__		735.00 [333.39]
FW2535-7301G6L__			65.8" [1671]	94.0" [2387]			XA-0753-G6-__		810.00 [367.41]
FW2535-7009G2L__		10.6" [269]	13.8" [351]	38.9" [988]	21°	22°	XA-0752-G2-__	XA-7009	611.00 [277.14]
FW2535-7009G3L__			19.9" [505]	45.0" [1143]			XA-0752-G3-__		673.00 [305.27]
FW2535-7009G4L__			32.1" [815]	57.2" [1452]			XA-0752-G4-__		705.00 [319.78]
FW2535-7009G5L__			44.4" [1128]	69.5" [1765]			XA-0752-G5-__		780.00 [353.80]
FW2535-7009G6L__			56.6" [1438]	82.0" [2082]			XA-0752-G6-__		851.00 [386.01]
FW2535-7009G7L__			68.8" [1748]	94.0" [2387]			XA-0752-G7-__		935.00 [424.11]
FW2535-7013G1L__	MANUAL RELEASE	7.1" [180]	10.7" [272]	38.9" [988]	11°	7°	XA-0753-G1-__	XA-7013	521.00 [236.32]
FW2535-7013G2L__			16.8" [427]	45.0" [1143]			XA-0753-G2-__		545.00 [247.21]
FW2535-7013G3L__			24.5" [622]	52.6" [1336]			XA-0753-G3-__		578.00 [262.18]
FW2535-7013G4L__			41.3" [1049]	69.5" [1765]			XA-0753-G4-__		636.00 [288.48]
FW2535-7013G5L__			53.6" [1361]	82.0" [2082]			XA-0753-G5-__		717.00 [325.23]
FW2535-7013G6L__			65.8" [1671]	94.0" [2387]			XA-0753-G6-__		792.00 [359.25]
FW2535-7012G1L__		8.1" [206]	12.2" [310]	32.8" [833]	14°	19°	XA-0753-G1-__	XA-7012	523.00 [237.23]
FW2535-7012G2L__			18.4" [467]	38.9" [988]			XA-0753-G2-__		572.00 [259.45]
FW2535-7012G3L__			24.5" [622]	45.0" [1143]			XA-0753-G3-__		594.00 [269.43]
FW2535-7012G4L__			36.7" [932]	57.2" [1452]			XA-0753-G4-__		666.00 [302.09]
FW2535-7012G5L__			48.9" [1242]	69.5" [1765]			XA-0753-G5-__		741.00 [336.11]
FW2535-7012G6L__			61.2" [1554]	82.0" [2082]			XA-0753-G6-__		812.00 [368.32]
FW2535-7011G1L__		9.1" [231]	12.2" [310]	32.8" [833]	16°	19°	XA-0753-G1-__	XA-7011	528.00 [239.50]
FW2535-7011G2L__			18.4" [467]	38.9" [988]			XA-0753-G2-__		577.00 [261.72]
FW2535-7011G3L__			24.5" [622]	45.0" [1143]			XA-0753-G3-__		599.00 [271.70]
FW2535-7011G4L__			36.7" [932]	57.2" [1452]			XA-0753-G4-__		671.00 [304.36]
FW2535-7011G5L__			48.9" [1242]	69.5" [1765]			XA-0753-G5-__		746.00 [338.38]
FW2535-7011G6L__			61.2" [1554]	82.0" [2082]			XA-0753-G6-__		817.00 [370.58]
FW2535-7311G1L__		8.6" [218]	10.7" [272]	38.9" [988]	16°	15°	XA-0753-G1-__	XA-7311	530.00 [240.40]
FW2535-7311G2L__			16.8" [427]	45.0" [1143]			XA-0753-G2-__		554.00 [251.29]
FW2535-7311G3L__			24.5" [622]	52.6" [1336]			XA-0753-G3-__		587.00 [266.26]
FW2535-7311G4L__			41.3" [1049]	69.5" [1765]			XA-0753-G4-__		645.00 [292.57]
FW2535-7311G5L__			53.6" [1361]	82.0" [2082]			XA-0753-G5-__		726.00 [329.31]
FW2535-7311G6L__			65.8" [1671]	94.0" [2387]			XA-0753-G6-__		801.00 [363.33]
FW2535-7019G2L__		10.6" [269]	13.8" [351]	38.9" [988]	21°	22°	XA-0752-G2-__	XA-7019	611.00 [277.14]
FW2535-7019G3L__			19.9" [505]	45.0" [1143]			XA-0752-G3-__		633.00 [287.12]
FW2535-7019G4L__			32.1" [815]	57.2" [1452]			XA-0752-G4-__		705.00 [319.78]
FW2535-7019G5L__			44.4" [1128]	69.5" [1765]			XA-0752-G5-__		780.00 [353.80]
FW2535-7019G6L__			56.6" [1438]	82.0" [2082]			XA-0752-G6-__		851.00 [386.01]
FW2535-7019G7L__			68.8" [1748]	94.0" [2387]			XA-0752-G7-__		935.00 [424.11]

◊ For right-hand release fifth wheels, change "L" to "R" in part number.
* No longer available.
** See bracket section for more information.

 Amendments and errors reserved. © SAF-HOLLAND, Inc.

FW3500 Stationary Kompensator Inboard with Angle Mount



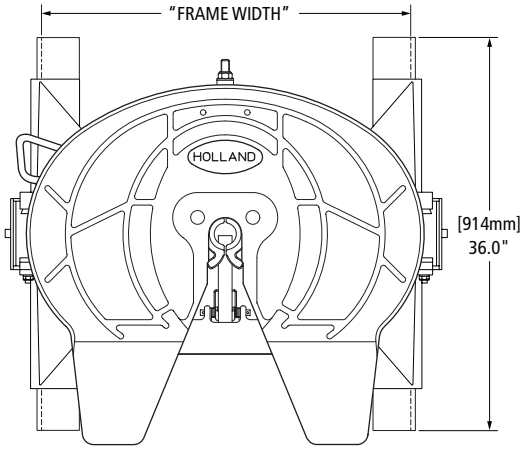

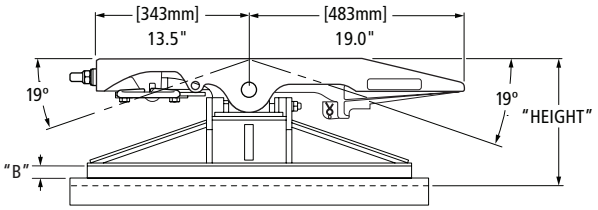

Frame width "A-L": .38" x 4" x 4" angle dimensions
"M-Q": .38" x 5" x 5" angle dimensions (option code 21)
See option codes for other options.

STANDARD OPTION CODES Replaces the Underscore (__) on the legacy part number.	
NUMBER CODE	DESCRIPTION
Blank	Standard, No Other Options
02	Manual Secondary Lock
21	.38" x 5" x 5" Angle

PART NUMBER*◊	HEIGHT	B	REPLACEMENT BRACKET**	FW WEIGHT LBS [KG]
FW3540-7711GL__	12.9" [328]	3.00"	XA-40-7711-G	582.00 [263.99]
FW3540-7712GL__	11.9" [302]	2.00"	XA-40-7712-G	581.00 [263.54]
FW3540-7713GL__	9.9" [251]	--- +	XA-40-7713-G	527.00 [239.04]

◊ For right-hand release fifth wheels, change "L" to "R" in part number.
* No longer available.
+ Kompensator frame bracket extends 1.2" below bottom side of angle.
** See bracket section for more information.

FRAME WIDTH CODE CHART					
CODE	FRAME WIDTH IN [MM]	CODE	FRAME WIDTH IN [MM]	CODE	FRAME WIDTH IN [MM]
A	33.25" [845]	F	33.88" [861]	M	34.62" [879]
B	33.38" [848]	**G†**	**34.00" [864]**	N	34.75" [883]
C	33.50" [851]	H	34.12" [867]	P	34.88" [886]
D	33.62" [854]	K	34.38" [873]	Q	35.00" [889]
E	33.75" [857]	L	34.50" [876]		

† Standard

XL-FW10081PM-en-US Rev D 2016-03-01 Amendments and errors reserved. © SAF-HOLLAND, Inc.

FW3500 Sliding Kompensator Inboard with Angle Mount



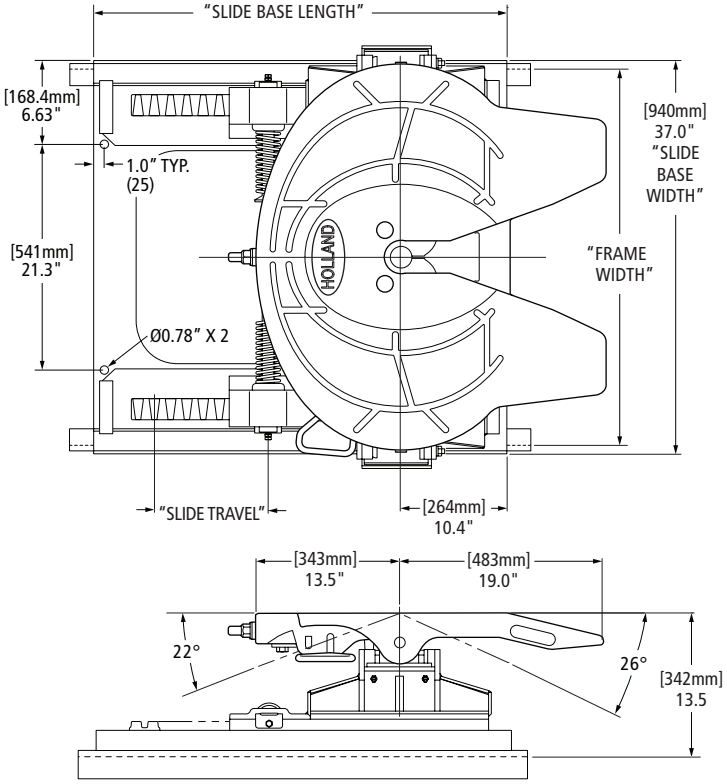

Frame width "A"-"K": .50" x 4" x 4" angle dimensions
See option codes for other angle sizes.

PART NUMBER*◊	SLIDE TRAVEL IN [MM]	SLIDE BASE LENGTH IN [MM]	REPLACEMENT SLIDE BASE**	REPLACEMENT BRACKET**	FW WEIGHT LBS [KG]
FW3590-7201G1L	10.7" [272]	38.9" [988]	XA-02136-G1	XA-7201	841.00 [381.47]
FW3590-7201G2L	16.8" [427]	45.0" [1143]	XA-02136-G2		878.00 [398.25]
FW3590-7201G3L	24.5" [622]	52.6" [1336]	XA-02136-G3A		948.00 [430.01]
FW3590-7201G4L	41.3" [1049]	69.5" [1765]	XA-02136-G4		1009.00 [457.67]
FW3590-7201G5L	53.6" [1361]	82.0" [2082]	XA-02136-G5		1153.00 [522.99]
FW3590-7201G6L	65.8" [1671]	94.0" [2387]	XA-02136-G6		1253.00 [568.35]

◊ For right-hand release fifth wheels, change "L" to "R" in part number.
* No longer available.
** See bracket section for more information.

FRAME WIDTH CODE CHART					
CODE	FRAME WIDTH IN [MM]	CODE	FRAME WIDTH IN [MM]	CODE	FRAME WIDTH IN [MM]
A	33.25" [845]	E	33.75" [857]	L	34.50" [876]
B	33.38" [848]	F	33.88" [861]	J	34.25" [870]
C	33.50" [851]	G†	**34.00" [864]**	K	34.38" [873]
D	33.62" [854]	H	34.12" [867]		

† Standard

 Amendments and errors reserved. © SAF-HOLLAND, Inc.

FW31 Exploded View



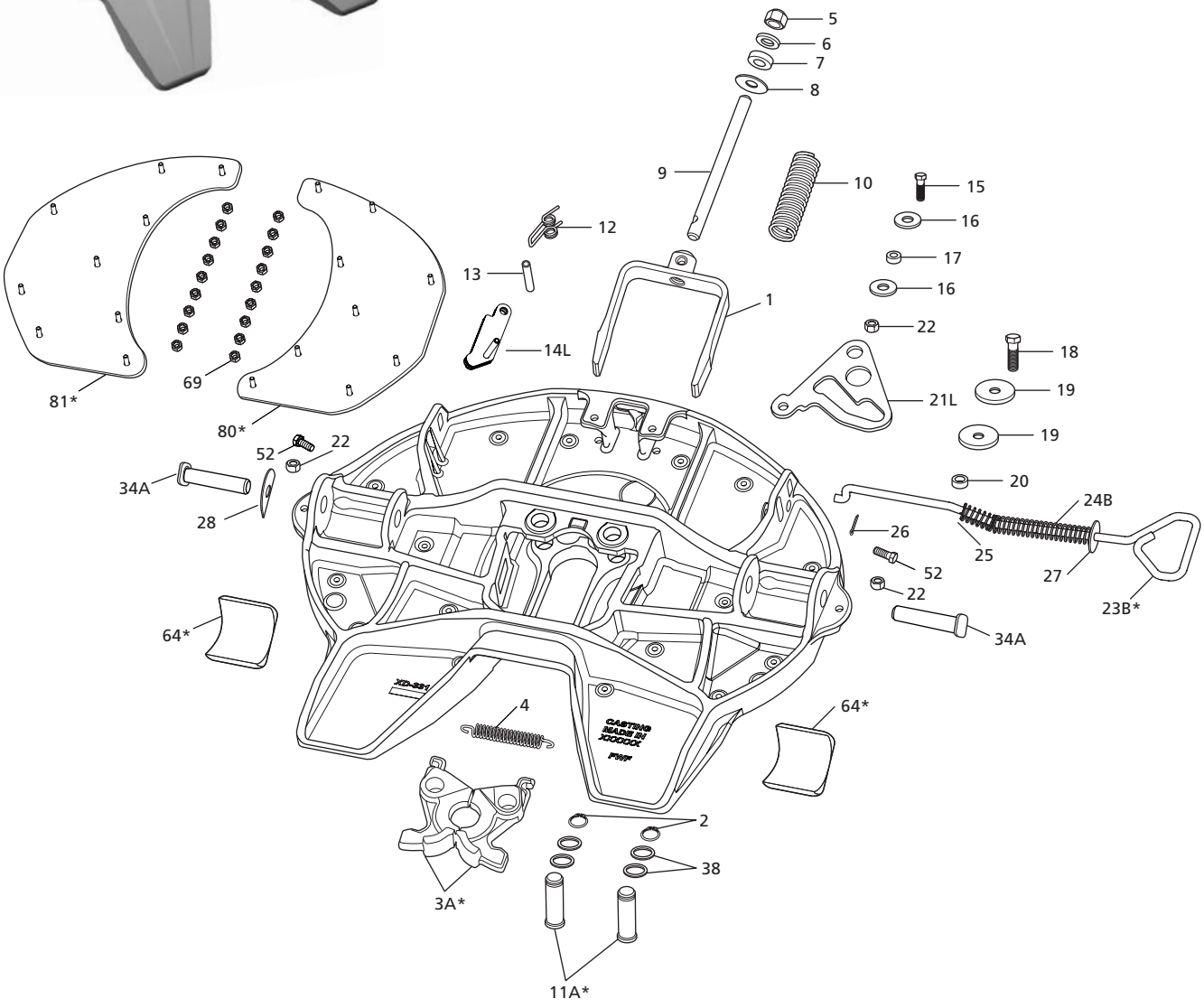

FOR RIGHT HAND RELEASE

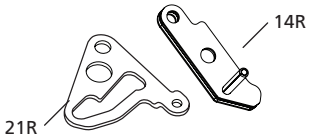

FOR AIR RELEASE MODELS

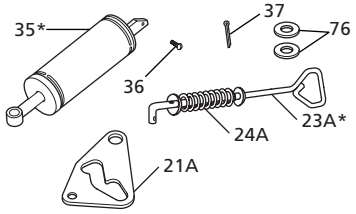

FOR MODELS EQUIPPED WITH MANUAL SECONDARY LOCK

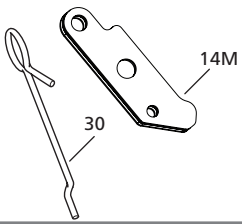

 Amendments and errors reserved. © SAF-HOLLAND, Inc.

FW31 PARTS LIST

ITEM	DESCRIPTION	PART NUMBER	QTY.	WEIGHT LBS [KG]
1	Yoke	XA-10257	1	5.80 [2.63]
2	Retaining Ring, 1" Dia.	XB-07398	2	0.01 [0.00]
3A*	Lock Jaw Set	XA-10853-SP	1	7.82 [3.55]
4	Spring, Extension	XB-07628	1	0.08 [0.04]
5	Lock Nut, .75"-16 GR C	XB-HNH-34-F	1	0.14 [0.06]
6	Washer, .81" I.D. x 1.47" O.D.	XB-PW-1316-112-P	1	0.05 [0.02]
7	Washer, Rubber, 1.50" O.D. x .75" I.D.	XB-1127	1	0.03 [0.01]
8	Tag, Lock Adjustment	XB-02312	1	0.01 [0.00]
9	Yoke Shaft	XA-1706	1	1.28 [0.58]
10	Spring, Compression	XB-1505	1	0.61 [0.28]
11A*	Pin, Lock, Lubricated, See RK-07292-2 or RK-311-LK	XA-10256	2	1.07 [0.49]
12	Spring, Torsion	XB-2149	1	0.06 [0.03]
13	Spring Pin, .50" Dia. x 2.75" Long	XB-21-S-500-2750-P	1	N/A
14L	Lock, Secondary, Left-Hand	XA-11992-L	1	0.67 [0.30]
14M	Lock, Manual Secondary,	XA-11992	1	0.61 [0.28]
14R	Lock, Secondary, Right-Hand	XA-11992-R	1	0.70 [0.32]
15	HHCS, .50"-20 x 1.75" GR 5	XB-2083	1	0.13 [0.06]
16	Washer, .53" I.D. x 2.25" O.D., Stainless Steel	XB-10294	2	0.11 [0.05]
17	Roller, .52" I.D. x 1" O.D. x .38" Long, with Lubricant	XA-10265	1	0.10 [0.05]
18	HHCS, .63"-18 x 1.75" GR 8	XB-CX-58-F-134	1	0.21 [0.10]
19	Washer, .65" I.D. x 2.63" O.D., Stainless Steel	XB-10259	2	0.30 [0.14]
20	Roller, .66" I.D. x 1" O.D. x .38" Long, with Lubricant	XA-10343	1	0.05 [0.02]
21A	Cam Plate, Air Release, Lubricated	XA-10453	1	1.75 [0.79]
21L	Cam Plate, Left-Hand, Lubricated	XA-10258	1	1.93 [0.88]
21R	Cam Plate, Right-Hand, Lubricated	XA-10450	1	1.93 [0.88]
22	Lock Nut .50"-20 GR C	XB-T-69-A	3	0.04 [0.02]
23A*	Release Handle, Air Release, See RK-10452	XA-10452	1	1.93 [0.88]
23B*	Release Handle, Left- and Right-Hand, See RK-311-10344	XA-10344	1	2.00 [0.91]
24A	Spring, Air Release	XB-07974	1	0.16 [0.07]
24B	Spring, Manual Release	XB-07291	1	0.20 [0.09]
25	Washer, .53" I.D. x 1.06" O.D.	XB-PW-016-17	1	0.02 [0.01]
26	Pin, Cotter, .13" x 1.25" Long	XB-07508	1	0.02 [0.01]
27	Washer, .56" I.D. x 1.38" O.D.	XB-T-49	1	0.04 [0.02]
28	Tag, Operation	XB-07610	1	N/A
30	Lock, Secondary Release Handle, Manual	XA-10459	1	0.25 [0.11]
34A	Pin, Bracket	XE-06356-P	2	1.98 [0.90]
35*	Air Release Cylinder Assembly, See RK-2524-R-16-L	XA-2524-R-16-L	1	4.70 [2.13]
36	Screw, Drive, #12 x .75" Long	XB-09155	1	0.01 [0.005]
37	Pin, Cotter, .19" x 1.25" Long	XB-06336	1	0.01 [0.005]

NOTE: See Accessories Section for Air Release, Electronic Lock Indicator Kits.

FW31 PARTS LIST

ITEM	DESCRIPTION	PART NUMBER	QTY.	WEIGHT LBS [KG]
38	Washer, 1.19" I.D. x 1.58" O.D.	XB-05859-1	4	0.01 [0.005]
52	HHCS, .50"-20 x 1.25" GR 5	XB-C-95	2	0.11 [0.05]
64*	Pocket Insert, See RK-PKT-2	XD-08908	2	1.72 [0.78]
69	Lock Nut, .31"-18 GR B	XB-08931	18	0.01 [0.005]
76	Washer, .56" I.D. x 1.38" O.D., Stainless Steel	XB-10456	2	0.04 [0.02]
80*	Lube Plate, Left-Hand	XA-08125-L	1	4.80 [2.18]
81*	Lube Plate, Right-Hand	XA-08125-R	1	4.80 [2.18]

*Not sold individually - must be purchased in kit.

REPLACEMENT TOP PLATE PART NUMBERS

PART NUMBER	DESCRIPTION
XA-311-A-P	Right-Hand Release with Pins
XA-311-A-L-P	Left-Hand Release with Pins
XA-311-A-86-L-P	Air Release with Pins and Air Controls
XA-311-A-02-P	Manual Secondary Lock Right-Hand Release with Pins
XA-311-A-02-L-P	Manual Secondary Lock Left-Hand Release with Pins
XA-311-A-28-L-P	Left-Hand Converter Dolly Release with Pins
XA-311-A-L-EL-P	Left-Hand Release with ELI and Pins

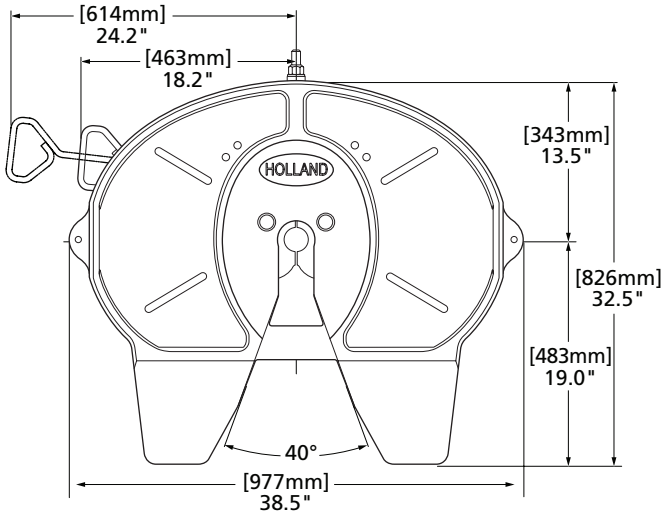

For XA-311 fifth wheel rebuild procedures, see Holland publication XL-FW290 at www.safholland.us

 Amendments and errors reserved. © SAF-HOLLAND, Inc.

SAF-HOLLAND Group

RK-07292-2
Lock Pins

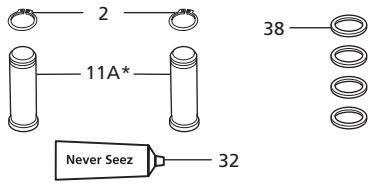

RK-311-10257
Cam Plate Lock Yoke Replacement

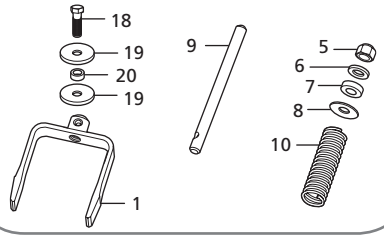

RK-311-10343
Roller Bolt Hardware

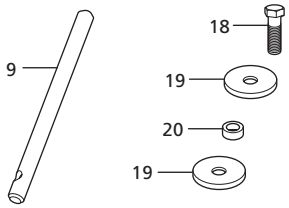

RK-351-02312
Lock Adjustment Tag

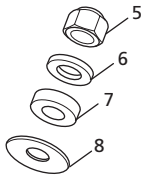

RK-311-2083
Cam Plate Pivot Bolt Hardware

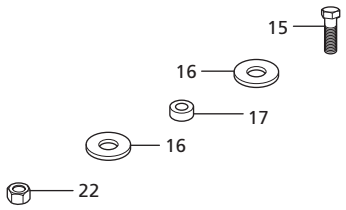

RK-311-LK
Lock, Standard

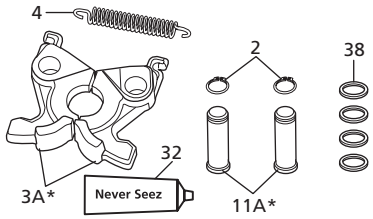

FW31 KIT PARTS LIST

ITEM	DESCRIPTION	PART NUMBER	QTY.	WEIGHT LBS [KG]
1	Yoke	XA-10257	1	5.80 [2.63]
2	Retaining Ring 1" Dia.	XB-07398	2	0.01 [0.00]
3A*	Lock Jaw Set	XA-10853-SP	1	7.82 [3.55]
4	Spring, Extension	XB-07628	1	0.08 [0.04]
5	Lock Nut, .75"-16 GR C	XB-HNH-34-F	1	0.14 [0.06]
6	Washer, .81" I.D. x 1.47" O.D.	XB-PW-1316-112-P	1	0.05 [0.02]
7	Washer, Rubber, 1.50" O.D. x .75" I.D.	XB-1127	1	0.03 [0.01]
8	Tag, Lock Adjustment	XB-02312	1	N/A
9	Yoke Shaft	XA-1706	1	1.28 [0.58]
10	Spring, Compression	XB-1505	1	0.61 [0.28]
11A*	Pin, Lock, Lubricated	XA-10256	2	1.07 [0.49]

FW31 KIT PARTS LIST

ITEM	DESCRIPTION	PART NUMBER	QTY.	WEIGHT LBS [KG]
15	HHCS, .50"-20 x 1.75" GR 5	XB-2083	1	0.13 [0.06]
16	Washer, .53" I.D. x 2.25" O.D., Stainless Steel	XB-10294	2	0.11 [0.05]
17	Roller, .52" I.D. x 1" O.D. x .38" Long, with Lubricant	XA-10265	1	0.10 [0.05]
18	HHCS, .63"-18 x 1.75" GR 8	XB-CX-58-F-134	1	0.21 [0.10]
19	Washer, .65" I.D. x 2.63" O.D., Stainless Steel	XB-10259	2	0.30 [0.14]
20	Roller, .66" I.D. x 1" O.D. x .38" Long, with Lubricant	XA-10343	1	0.05 [0.02]
22	Lock Nut, .50"-20 GR C	XB-T-69-A	1	0.04 [0.02]
32	Never-Seez, 7.5g Tube	XB-02967	1	N/A
38	Washer, 1.19" I.D. x 1.58" O.D.	XB-05859-1	4	0.01 [0.005]

*Not sold individually - must be purchased in kit.

 Amendments and errors reserved. © SAF-HOLLAND, Inc.

RK-331-3
Lube Plate and Pocket Inserts

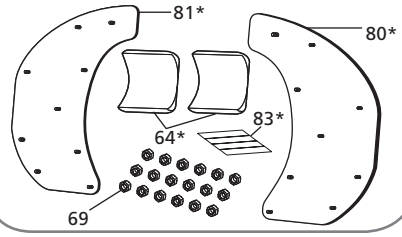

RK-331-1
Lube Plate

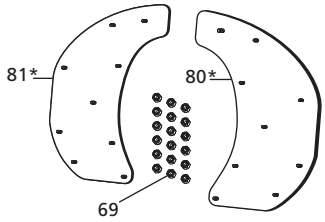

RK-PKT-2
Pocket Inserts

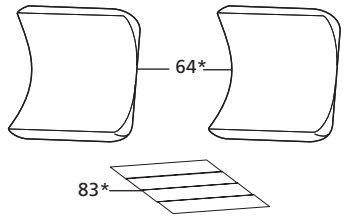

RK-311-10344
Release Handle, Left- and Right-Hand

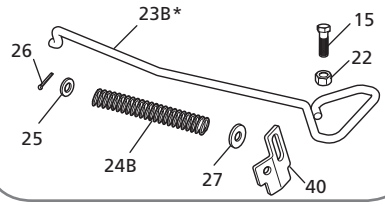

RK-10452
Release Handle, Air Release

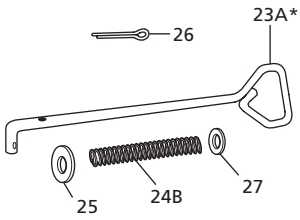

RK-10513
Release Handle Convertor Dolly

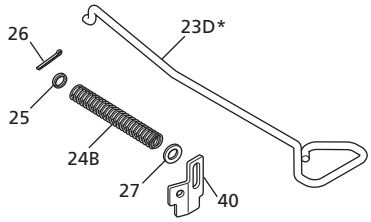

RK-06973-1
Bracket Pin and Cushions

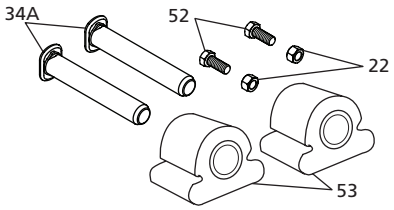

FW31 KIT PARTS LIST

ITEM	DESCRIPTION	PART NUMBER	QTY.	WEIGHT LBS [KG]
15	HHCS, .50"-20 x 1.75" GR 5	XB-2083	1	0.13 [0.06]
22	Lock Nut, .50" -20 GR C , Converter Dolly	XB-T-69-A	1	0.04 [0.02]
	Lock Nut, .50" -20 GR C, Bracket Pins		2	0.04 [0.02]
23A*	Release Handle, Air Release	XA-10452	1	1.93 [0.88]
23B*	Release Handle, Left and Right-Hand	XA-10344	1	2.00 [0.91]
23D*	Handle S/A, Left-Hand Release, Release Handle, Drop Release	XA-10513	1	2.12 [0.96]
24B	Spring, Manual Release	XB-07291	1	0.20 [0.09]
25	Washer, .53" I.D. x 1.06" O.D.	XB-PW-016-17	1	0.02 [0.01]
26	Pin, Cotter, .13" Dia. x 1.25" Long	XB-07508	1	0.02 [0.01]
27	Washer, .56" I.D. x 1.38" O.D.	XB-T-49	1	0.04 [0.02]

FW31 KIT PARTS LIST

ITEM	DESCRIPTION	PART NUMBER	QTY.	WEIGHT LBS [KG]
34A	Pin, Bracket	XE-06356-P	2	1.98 [0.90]
40	Plate, Dolly Release Handle	XA-09963	1	0.45 [0.20]
52	HHCS, .50"-20 x 1.25" GR 5	XB-C-95	2	0.11 [0.05]
53	Cushion, Rubber	XB-0011-2	2	0.60 [0.27]
64*	Pocket Insert	XD-08908	2	1.72 [0.78]
69	Lock Nut, .31"-18 GR B	XB-08931	18	0.01 [0.00]
80*	Lube Plate, Left-Hand	XA-08125-L	1	4.80 [2.18]
81*	Lube Plate, Right-Hand	XA-08125-R	1	4.80 [2.18]
83*	Tape, Double Face	XB-09422	4	N/A

*Not sold individually - must be purchased in kit.

 Amendments and errors reserved. © SAF-HOLLAND, Inc.

SAF-HOLLAND Group

RK-10506 (Stainless Steel Cylinder)
RK-10506-AL (Aluminum Air Cylinder)
Air Release, No-Lube

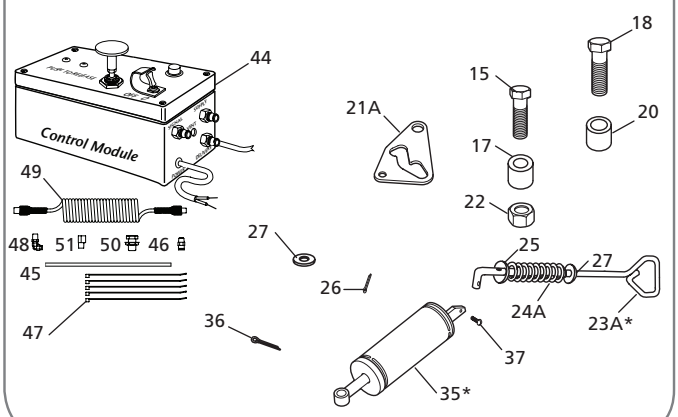

RK-10506-1
Air Release, Retrofit, No Lube

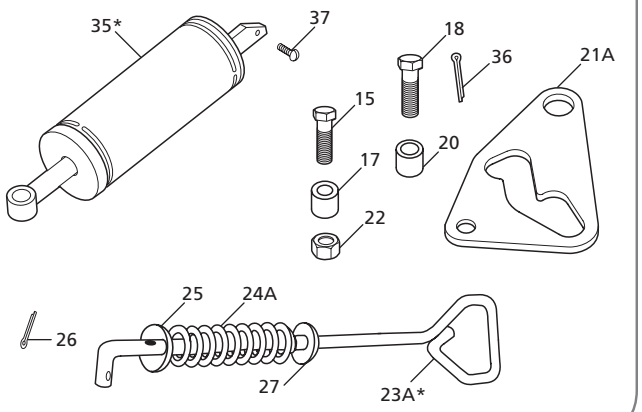

FW31 KIT PARTS LIST

ITEM	DESCRIPTION	PART NUMBER	QTY.	WEIGHT LBS [KG]
15	HHCS, .50"-20 x 1.75" GR 5	XB-2083	1	0.13 [0.06]
17	Roller, .52" I.D. x 1" O.D. x .38" Long, with Lubricant	XA-10265	1	0.10 [0.05]
18	HHCS, .63"-18 x 1.75" GR 8	XB-CX-58-F-134	1	0.21 [0.10]
20	Roller, .66" I.D. x 1" O.D. x .38" Long, with Lubricant	XA-10343	1	0.05 [0.02]
21A	Cam Plate, Air Release	XA-10453	1	1.75 [0.79]
22	Lock Nut, .50"-20 GR C	XB-T-69-A	1	0.04 [0.02]
23A*	Release Handle, Air Release, See RK-10452	XA-10452	1	1.93 [0.88]
24A	Spring, Air Release	XB-07974	1	0.16 [0.07]
25	Washer, .53" I.D. x 1.06" O.D.	XB-PW-016-17	1	0.02 [0.01]
26	Pin, Cotter, .13" x 1.25" Long	XB-07508	1	0.02 [0.01]
27	Washer, .56" I.D. x 1.38" O.D.	XB-T-49	2	0.04 [0.02]
35*	Air Release Cylinder Assembly, See RK-2524-R-16-L	XA-2524-R-16-L	1	4.70 [2.13]
36	Pin, Cotter, .19" Dia. x 1.25" Long	XB-06336	1	0.01 [0.00]
37	Screw, Drive, #12 x .75" Long	XB-09155	1	0.01 [0.00]
44	Control Module, Air Release	XA-06354	1	0.01 [0.00]
45	Nylon .25" O.D. Tubing 35' Long	XA-06565-35	1	0.56 [0.25]
46	Pipe Fitting, Male	XB-11251	1	0.03 [0.01]
47	Cable Ties, Nylon	XB-01961	5	N/A
48	Elbow, 90° Street	XB-01996	1	0.09 [0.04]
49	Air Hose Assembly	XB-06583	1	N/A
50	Fitting, Bulkhead, .25" NPT Female	XB-01959	1	0.18 [0.08]
51	Elbow, Swivel, Male 90°	XB-06570	1	N/A

*Not sold individually - must be purchased in kit.

XL-FW10081PM-en-US Rev D 2016-03-01 Amendments and errors reserved. © SAF-HOLLAND, Inc.

RK-311-A
Complete Rebuild, Standard Right-Hand Release

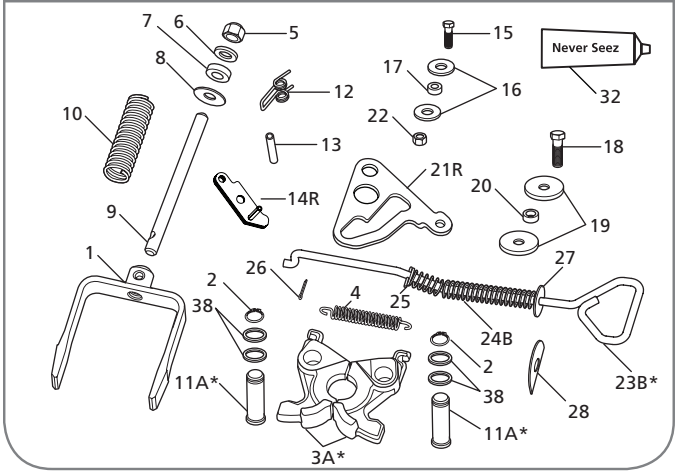

RK-311-A-L
Complete Rebuild, Standard Left-Hand Release

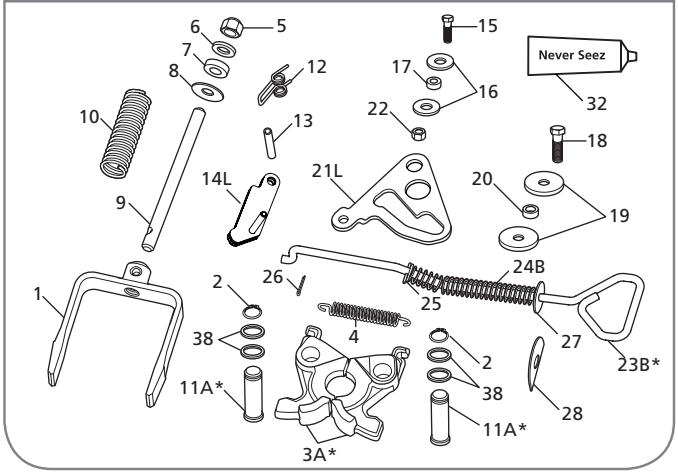

FW31 KIT PARTS LIST

ITEM	DESCRIPTION	PART NUMBER	QTY.	WEIGHT LBS [KG]
1	Yoke	XA-10257	1	5.80 [2.63]
2	Retaining Ring, 1" Dia.	XB-07398	2	0.01 [0.005]
3A*	Lock Jaw Set, See Lock Replacement Kits RK-311-LK	XA-10853-SP	1	7.82 [3.55]
4	Extension Spring	XB-07628	1	0.08 [0.04]
5	Lock Nut, .75"-16 GR C	XB-HNH-34-F	1	0.14 [0.06]
6	Washer, .81" I.D. x 1.47" O.D.	XB-PW-1316-112-P	1	0.05 [0.02]
7	Washer, Rubber, 1.50" O.D. x .75" I.D.	XB-1127	1	0.03 [0.01]
8	Tag, Lock Adjustment	XB-02312	1	N/A
9	Yoke Shaft	XA-1706	1	1.28 [0.58]
10	Spring, Compression	XB-1505	1	0.61 [0.28]
11A*	Pin, Lock, Lubricated, See RK-07292-2 or RK-311-LK	XA-10256	2	1.07 [0.49]
12	Spring, Torsion	XB-2149	1	0.06 [0.03]
13	Pin, Spring, .50" Dia. x 2.75" Long	XB-21-S-500-2750-P	1	N/A
14L	Lock, Secondary, Left-Hand	XA-11992-L	1	0.67 [0.30]
14R	Lock, Secondary, Right-Hand	XA-11992-R	1	0.70 [0.32]
15	HHCS, .50"-20 x 1.75" GR 5	XB-2083	1	0.13 [0.06]
16	Washer, .53" I.D. x 2.25" O.D., Stainless Steel	XB-10294	2	0.11 [0.05]

FW31 KIT PARTS LIST

ITEM	DESCRIPTION	PART NUMBER	QTY.	WEIGHT LBS [KG]
17	Roller, .52" I.D. x 1" O.D. x .38" Long, with Lubricant	XA-10265	1	0.10 [0.05]
18	HHCS, .63"-18 x 1.75" GR 8	XB-CX-58-F-134	1	0.21 [0.10]
19	Washer, .65" I.D. x 2.63" O.D., Stainless Steel	XB-10259	2	0.30 [0.14]
20	Roller, .66" I.D. x 1" O.D. x .38" Long, with Lubricant	XA-10343	1	0.05 [0.02]
21L	Cam Plate, Left-Hand, Lubricated	XA-10258	1	1.93 [0.88]
21R	Cam Plate, Right-Hand, Lubricated	XA-10450	1	1.90 [0.86]
22	Lock Nut, .50"-20 GR C	XB-T-69-A	1	0.04 [0.02]
23B*	Release Handle, Left- and Right-Hand, See RK-311-10344	XA-10344	1	2.00 [0.91]
24B	Spring, Manual Release	XB-07291	1	0.20 [0.09]
25	Washer, .53" I.D. x 1.06" O.D.	XB-PW-016-17	1	0.02 [0.01]
26	Pin, Cotter, .13" x 1.25" Long	XB-07508	1	0.02 [0.01]
27	Washer, .56" I.D. x 1.38" O.D.	XB-T-49	1	0.04 [0.02]
28	Tag Operation (Service Part Only)	XB-07610	1	N/A
32	Never-Seez, 7.5g Tube	XB-02967	1	N/A
38	Washer, 1.19" I.D. x 1.58" O.D.	XB-05859-1	4	0.01 [0.00]

*Not sold individually - must be purchased in kit.

 Amendments and errors reserved. © SAF-HOLLAND, Inc.

RK-311-A-02
Complete Rebuild, Standard Secondary Lock, Right-Hand Release

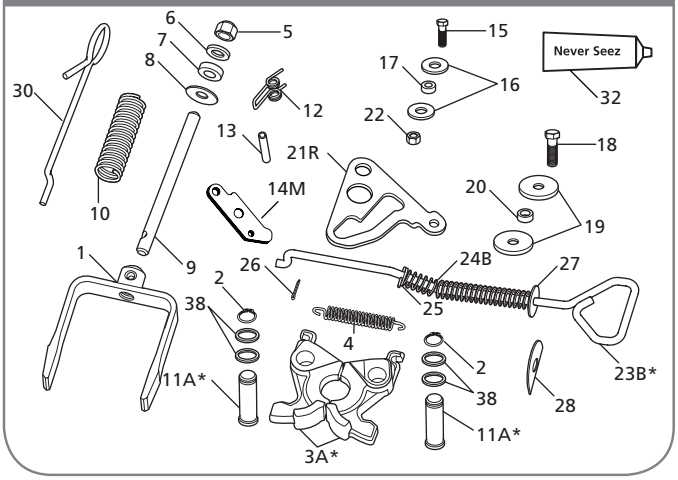

RK-311-A-02-L
Complete Rebuild, Standard Secondary Lock, Left-Hand Release

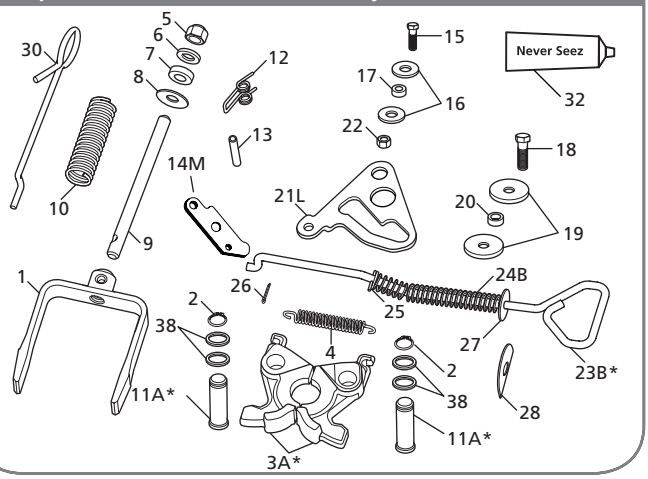

FW31 KIT PARTS LIST

ITEM	DESCRIPTION	PART NUMBER	QTY.	WEIGHT LBS [KG]
1	Yoke	XA-10257	1	5.80 [2.63]
2	Retaining Ring, 1"Dia.	XB-07398	2	0.01 [0.00]
3A*	Lock Jaw Set, See RK-311-LK	XA-10853-SP	1	7.82 [3.55]
4	Spring, Extension	XB-07628	1	0.08 [0.04]
5	Lock Nut, .75"-16 GR C	XB-HNH-34-F	1	0.14 [0.06]
6	Washer, .81" I.D. x 1.47" O.D.	XB-PW-1316-112-P	1	0.05 [0.02]
7	Washer, Rubber, 1.50" O.D. x .75" I.D.	XB-1127	1	0.03 [0.01]
8	Tag, Lock Adjustment	XB-02312	1	N/A
9	Yoke Shaft	XA-1706	1	1.28 [0.58]
10	Spring, Compression	XB-1505	1	0.61 [0.28]
11A*	Pin, Lock, Lubricated, See RK-07292-2 or RK-311-LK	XA-10256	2	1.07 [0.49]
12	Spring, Torsion	XB-2149	1	0.06 [0.03]
13	Pin, Spring, .50" Dia. x 2.75" Long	XB-21-S-500-2750-P	1	N/A
14M	Lock, Manual Secondary	XA-11994	1	0.61 [0.28]
15	HHCS, .50"-20 x 1.75" GR 5	XB-2083	1	0.13 [0.06]
16	Washer, .53" I.D. x 2.25" O.D., Stainless Steel	XB-10294	2	0.11 [0.05]

FW31 KIT PARTS LIST

ITEM	DESCRIPTION	PART NUMBER	QTY.	WEIGHT LBS [KG]
17	Roller, .52" I.D. x 1" O.D. x .38" Long, with Lubricant	XA-10257	1	0.10 [0.05]
18	HHCS, .63"-18 x 1.75" GR 8	XB-07398	1	0.21 [0.10]
19	Washer, .65" I.D. x 2.63" O.D., Stainless Steel	XA-10853-SP	2	0.30 [0.14]
20	Roller, .66" I.D. x 1" O.D. x .38" Long, with Lubricant	XB-07628	1	0.05 [0.02]
21L	Cam Plate, Left-Hand, Lubricated	XB-HNH-34-F	1	1.93 [0.88]
21R	Cam Plate, Right-Hand, Lubricated	XB-PW-1316-112-P	1	1.90 [0.86]
22	Lock Nut, .50"-20 GR C	XB-1127	1	0.04 [0.02]
23B*	Release Handle, Both Left- and Right-Hand, See RK-311-10344	XB-02312	1	2.00 [0.91]
24B	Spring, Manual Release	XA-1706	1	0.20 [0.09]
25	Washer, .53"I.D. x 1.06" O.D.	XB-1505	1	0.02 [0.01]
26	Pin, Cotter, .13" x 1.25" Long	XA-10256	1	0.02 [0.01]
27	Washer, .56" I.D. x 1.38" O.D.	XB-2149	1	0.04 [0.02]
28	Tag	XB-21-S-500-2750-P	1	N/A
30	Release Handle, Manual Secondary Lock	XA-11994	1	0.25 [0.11]
32	Never-Seez, 7.5g Tube	XB-2083	2	N/A
38	Washer. 1.19" I.D. x 1.58" O.D.	XB-10294	4	0.01 [0.00]

*Not sold individually - must be purchased in kit.

XL-FW10081PM-en-US Rev D 2016-03-01 Amendments and errors reserved. © SAF-HOLLAND, Inc.

RK-311-A-80-L
Complete Rebuild, Standard Air Release

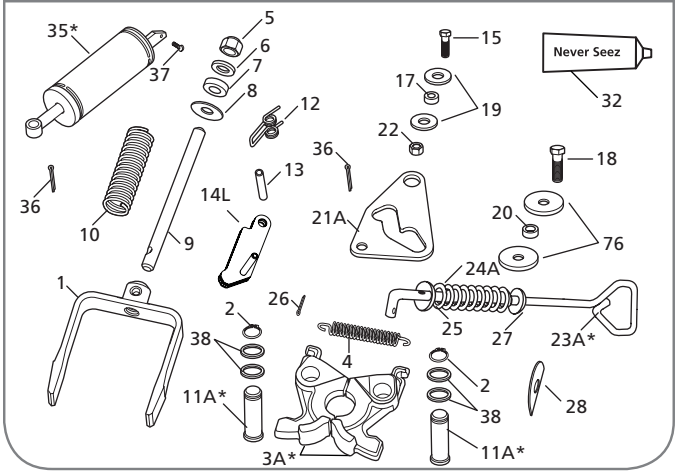

RK-311-A-28-L
Complete Rebuild, Converter Dolly

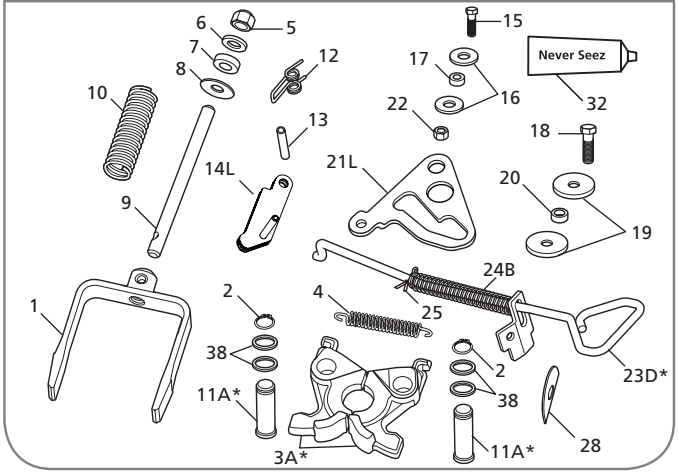

FW31 KIT PARTS LIST

ITEM	DESCRIPTION	PART NUMBER	QTY.	WEIGHT LBS [KG]
1	Yoke	XA-10257	1	5.80 [2.63]
2	Retaining Ring, 1"Dia.	XB-07398	2	0.01 [0.005]
3A*	Lock Jaw Set, See RK-311-LK	XA-10853	1	7.90 [3.58]
4	Spring, Extension	XB-07628	1	0.08 [0.04]
5	Lock Nut, .75"-16 GR C	XB-HNH-34-F	1	0.14 [0.06]
6	Washer, .81" I.D. x 1.47" O.D.	XB-PW-1316-112-P	1	0.05 [0.02]
7	Washer, Rubber, 1.50" O.D. x .75" I.D.	XB-1127	1	0.03 [0.01]
8	Tag	XB-02312	1	0.01 [0.00]
9	Yoke Shaft	XA-1706	1	1.28 [0.58]
10	Spring, Compression	XB-1505	1	0.61 [0.28]
11A*	Pin, Lock, Lubricated, See RK-07292-2 or RK-311-LK	XA-10256	2	1.07 [0.49]
12	Torsion Spring	XB-2149	1	0.06 [0.03]
13	Pin, Spring, .50" Dia. x 2.75" Long	XB-21-S-500-2750-P	1	N/A
14L	Lock, Secondary, Left-Hand	XA-11992-L	1	0.67 [0.30]
15	HHCS, .50"-20 x 1.75" GR 5	XB-2083	1	0.13 [0.06]
16	Washer, .53" I.D. x 2.25" O.D., Stainless Steel	XB-10294	2	0.11 [0.05]
17	Roller, .52" I.D. x 1" O.D. x .38" Long, with Lubricant	XA-10265	1	0.10 [0.05]
18	HHCS, .63"-18 x 1.75 GR 8	XB-CX-58-F-134	1	0.21 [0.10]
19	Washer, .65"I.D. x 2.63" O.D., Stainless Steel	XB-10259	2	0.30 [0.14]

FW31 KIT PARTS LIST

ITEM	DESCRIPTION	PART NUMBER	QTY.	WEIGHT LBS [KG]
20	Roller, .66" I.D. x 1" O.D. x .38" Long, with Lubricant	XA-10343	1	0.05 [0.02]
21A	Cam Plate, Air Release, Lubricated	XA-10453	1	1.75 [0.79]
21L	Cam Plate, Left-Hand, Lubricated	XA-10258	1	1.93 [0.88]
22	Lock Nut, .50"-20 GR C	XB-T-69-A	1	0.04 [0.02]
23A*	Release Handle, Air Release, See RK-10452	XA-10452	1	1.93 [0.88]
23D*	Release Handle, Drop Release, See RK-10513	XA-10513	1	2.12 [0.96]
24A	Spring, Air Release	XB-07974	1	0.16 [0.07]
24B	Spring, Manual Release	XB-07291	1	0.20 [0.09]
25	Washer, .53" I.D. x 1.06" O.D.	XB-PW-016-17	1	0.02 [0.01]
26	Pin, Cotter, .13" x 1.25" Long	XB-07508	1	0.02 [0.01]
27	Washer, .56" I.D. x 1.38" O.D.	XB-T-49	1	0.04 [0.02]
28	Tag, Operation (Service Part Only)	XB-07610	1	0.01 [0.01]
32	Never-Seez, 7.5g Tube	XB-02967	2	0.02 [0.01]
35*	Cylinder Assembly, Air , See RK-2524-R-16-L	XA-2524-R-16-L	1	4.70 [2.13]
36	Pin, Cotter, .19" Dia. x 1.25" Long	XB-06336	1	0.01 [0.005]
37	Drive Screw, #12 x .75"Long	XB-09155	1	0.01 [0.005]
38	Washer, 1.19" I.D. x 1.58" O.D.	XB-05859-1	4	0.01 [0.005]
40	Plate, Dolly Release Handle, See RK-351-09967	XA-09963	1	0.45 [0.20]
64*	Pocket Insert, See RK-PKT-2	XD-08908	2	1.72 [0.78]
76	Washer, .56 "I.D. x 1.38" O.D., Stainless Steel	XB-10456	2	0.04 [0.02]

*Not sold individually - must be purchased in kit.

 Amendments and errors reserved. © SAF-HOLLAND, Inc.

SAF-HOLLAND Group

ILS Style Fifth Wheel Assembly Part Numbers

General Holland prefix indicating complete fifth wheel assembly

SERIES	
31	FW31 Series

MOUNTING STYLE	
NO.	DESCRIPTION
Standard Duty Sliders	
A	Outboard (1 pc tie-bar)
B	Inboard (Serrated 3 pc tie-bar)
C	Inboard (Straight 3 pc tie-bar) (DTNA Air Fitting)
F	Outboard (1 pc tie-bar)
H	Inboard (1 pc tie-bar for PACCAR)
J	Outboard (1 pc tie-bar for PACCAR)
Standard Duty Stationaries	
Z	Integrated Plate Mount
Y	Foot Mount
X	Bracket Castings Only (No Angle or Base Plate)
W	Brackets w/4" Vert. Leg Angle
Specialty Mounting Systems	
K	Kompensator
N	No-Tilt

HEIGHT (approx.)	
NO.	DESCRIPTION
6	6" (Stationary only)
7	7"
8	8"
9	9"
0	10"
1	11" (Komp only)
2	12.0" [305] (Komp only)
3	13" (Komp only)

FW 31 X X XX X X XX

TRAVEL	
NO.	DESCRIPTION
00	Stationary
ILS Travel	
12	12"
18	18" (Only H & J) Mounting Style
24	24"
36	36"
48	48"
No-Tilt ILS Travel	
06	6"
18	18"
30	30"
42	42"
Kompensator Travel	
11	11"
17	17"
24	24"
41	41"
54	54"
66	66"

ANGLES	
NO.	DESCRIPTION
No Angle Mounting Systems	
W	Aftermarket Inboard No-Tilt & Komp (Serrated Edge)
X	Outboard Slider ***or*** Inboard Slider w/o Angles ***or*** Stationary w/o Angles
Y	Outboard No-Tilt & Komp
Z	OEM Inboard No-Tilt & Komp (straight edge)
Frame Width for Standard Duty Mounting Angles	
A	33.25"
B	33.38"
C	33.50"
D	33.62"
E	33.75
F	33.88"
G	34.00"
H	34.12"
J	34.25"
K	34.38"
L	34.50"

RELEASE HANDLE	
NO.	DESCRIPTION
L	Left-hand (Road-side)
R	Right-hand (Curb-side)

OPTION CODE*	
NO.	DESCRIPTION
00	No option
02	Manual Secondary Lock
24	Drilled & Tapped for Auto Lube
28	Dolly Release Handle
80	Air Release Top Plate
EL	Electronic Lock Indicator (ELI)
EA	ELI w/ Air Release Top Plate
8E	ELI w/Air Release Top Plate (PACCAR only)

NOTE: There are no "dashes" used for the complete fifthwheel assembly new part number

* Please note that not all options are are available on every top plate. Multiple option combinations are available.

XL-FW10081PM-en-US Rev B 2016-01-01 Amendments and errors reserved. © SAF-HOLLAND, Inc.

Traditional Style Stationary Fifth Wheel Assembly Part Numbers

General Holland prefix indicating complete fifth wheel assembly

SERIES	
31	FW31 Series

FRAME WIDTH			
LETTER	WIDTH	LETTER	WIDTH
X	No Angle	F	34.26"
A	33.63"	G	34.38"
B	33.76"	H	34.50"
C	33.88"	J	34.63"
D	34.00"	K	34.76"
E	34.13"	L	34.88"

RELEASE HANDLE	
NO.	DESCRIPTION
L	Left-hand (Road-side)
R	Right-hand (Curb-side)

FW 31 XXXX X X X XX

MOUNTING STYLE			
NO.	HEIGHT	NO.	HEIGHT
Foot Mount		*Bracket with Angle*	
7801	8.7"	7811	8.7"
7802	7.7"	7812	7.7"
7803	6.7"	7813	6.7"
7804	5.7"	7814	5.7"
Integrated Plate		*Bracket for Angle*	
7883	8.6"	7821	8.3"
8774	7.6"	7822	7.3"
7885	6.6"	7823	6.3"
7886	5.6"	7824	5.3"

SLIDE TRAVEL	
NO.	DESCRIPTION
1	12.2"
2	18.4"
3	24.5"
4	36.7"
5	48.9"

OPTION CODE*	
NO.	DESCRIPTION
BLANK	No option
02	Manual Secondary Lock
24	Drilled & Tapped for Auto Lube
Other Options Available	

Traditional Style Sliding Fifth Wheel Assembly Part Numbers

General Holland prefix indicating complete fifth wheel assembly

SERIES	
31	FW31Series

FRAME WIDTH			
LETTER	WIDTH	LETTER	WIDTH
X	No Angle	G	34.38"
A	33.63"	H	34.50"
B	33.76"	J	34.63"
C	33.88"	K	34.76"
D	34.00"	L	34.88"
E	34.13"	*Outboard*	
F	34.26"	T	Angles not Included

RELEASE HANDLE	
NO.	DESCRIPTION
L	Left-hand (Road-side)
R	Right-hand (Curb-side)

FW 31 XXXX X X X XX

MOUNTING STYLE			
NO.	HEIGHT	NO.	HEIGHT
Over the Frame		*Outboard*	
7001	8.63"	8001	8.63"
7002	7.63"	8002	7.63"
7003	6.63"	8003	6.63"

SLIDE TRAVEL	
NO.	DESCRIPTION
1	12.2"
2	18.4"
3	24.5"
4	36.7"
5	48.9"

OPTION CODE*	
NO.	DESCRIPTION
BLANK	No option
02	Manual Secondary Lock
24	Drilled & Tapped for Auto Lube
Other Options Available	

 Amendments and errors reserved. © SAF-HOLLAND, Inc.

FW31 Stationary Foot Mount



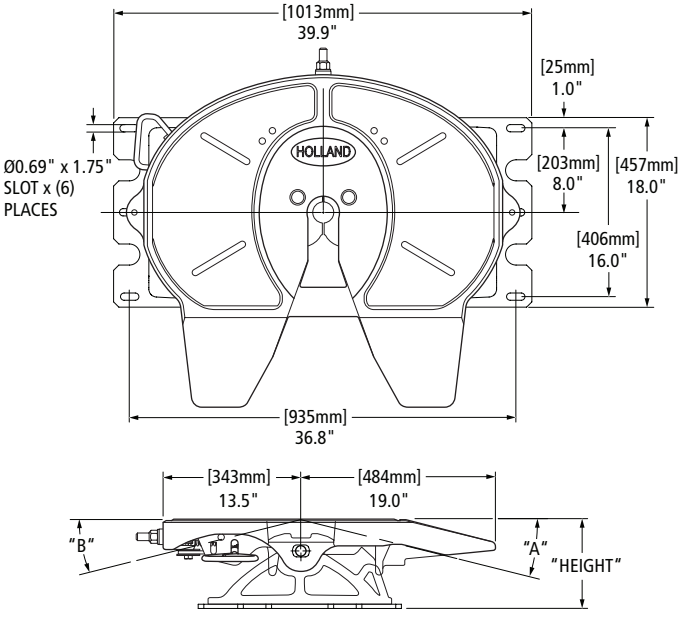

STANDARD OPTION CODES Replaces the Underscore (__) on the new and legacy part number.			
CODE	DESCRIPTION	CODE	DESCRIPTION
00 / Blank	Standard, No Other Options.	86	Air Release, Aftermarket Installations, Left-Hand Only
02	Manual Secondary Lock	92	Non-Drop Handle
28	Dolly Handle	1A	Manual Secondary Lock and Air Release
80	Air Release, OEM Replacement, Left-Hand Only	EL	Electronic Lock Indicator

* Corrugated Plate Option adds 0.9" to height.

FW PART NUMBER (CAST BRACKET)◊	LEGACY FW PART NUMBER (FABRICATED BRACKET)*◊	HEIGHT IN [MM]	A	B	REPLACEMENT BRACKETS**	FW WEIGHT LBS [KG]
FW31Y600XL__	FW31-7804XL__	6.0" [152]	8°	8°	RK-Y600	321.00 [145.60]
FW31Y700XL__	FW31-7803XL__	7.0" [178]	11°	11°	RK-Y700	327.00 [148.32]
FW31Y800XL__	FW31-7802XL__	8.0" [203]	14°	14°	RK-Y800	332.00 [150.59]
FW31Y900XL__	FW31-7801XL__	9.0" [229]	17°	17°	RK-Y900	337.00 [152.86]

◊ For right-hand release fifth wheels, change "L" to "R" in part number.
*No Longer Available.
** See bracket section for more information.

FW31 Stationary Integrated Plate Mount



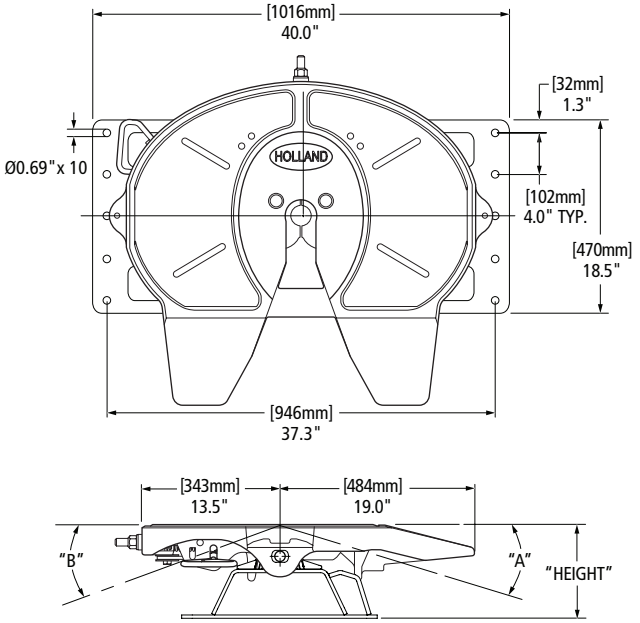

STANDARD OPTION CODES Replaces the Underscore (__) on the new and legacy part number.			
CODE	DESCRIPTION	CODE	DESCRIPTION
00 / Blank	Standard, No Other Options.	86	Air Release, Aftermarket Installations, Left-Hand Only
02	Manual Secondary Lock	92	Non-Drop Handle
28	Dolly Handle	EL	Electronic Lock Indicator
80	Air Release, OEM Replacement, Left-Hand Only		

FW PART NUMBER (CAST BRACKET)◊	LEGACY FW PART NUMBER (FABRICATED BRACKET)*◊	HEIGHT IN [MM]	A	B	REPLACEMENT BRACKETS**	FW WEIGHT LBS [KG]
FW31Z600XL__	FW31-7886XL__	6.0" [152]	8°	8°	RK-Z600	337.00 [152.86]
FW31Z700XL__	FW31-7885XL__	7.0" [178]	11°	11°	RK-Z700	345.00 [156.49]
FW31Z800XL__	FW31-7884XL__	8.0" [203]	14°	14°	RK-Z800	352.00 [159.66]
FW31Z900XL__	FW31-7883XL__	9.0" [229]	17°	17°	RK-Z900	348.00 [157.85]

◊ For right-hand release fifth wheels, change "L" to "R" in part number.
* No Longer Available
** See bracket section for more information.

XL-FW10081PM-en-US Rev D 2016-03-01 Amendments and errors reserved. © SAF-HOLLAND, Inc.

FW31 Stationary Brackets for Angle Mounting

Also Available With Angle Later In This Section.



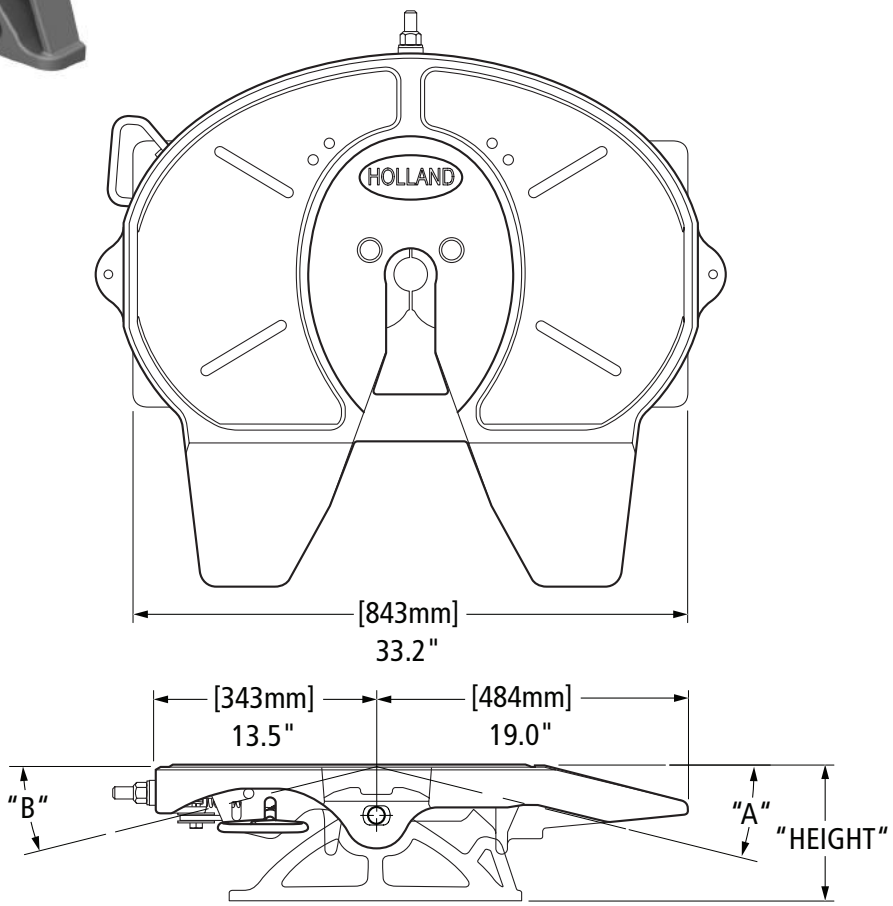

FW PART NUMBER (CAST BRACKET)◊	LEGACY FW PART NUMBER (FABRICATED BRACKET)*◊	HEIGHT IN [MM]	A	B	REPLACEMENT BRACKETS**	FW WEIGHT LBS [KG]
FW31X600XL__	FW31-7824XL__	5.6" [142]	8°	8°	RK-X600	292.00 [132.45]
FW31X700XL__	FW31-7823XL__	6.6" [168]	11°	11°	RK-X700	298.00 [135.17]
FW31X800XL__	FW31-7822XL__	7.6" [193]	14°	14°	RK-X800	302.00 [136.98]
FW31X900XL__	FW31-7821XL__	8.6" [218]	17°	17°	RK-X900	308.00 [139.71]

◊ For right-hand release fifth wheels, change "L" to "R" in part number.
*No Longer Available.
** See bracket section for more information.

STANDARD OPTION CODES Replaces the Underscore (__) on the new and legacy part number.	
NUMBER CODE	**DESCRIPTION**
00 / Blank	Standard, No Other Options.
02	Manual Secondary Lock
14	Grease Fittings in Top Plate, Four (4) Fittings
28	Dolly Handle
80	Air Release, OEM Replacement, Left-Hand Only
86	Air Release, New Installations, Left-Hand Only
1A	Manual Secondary Lock and Air Release
EA	Electronic Lock Indicator and Air Release

 Amendments and errors reserved. © SAF-HOLLAND, Inc.

FW31 Sliding ILS Outboard Mount



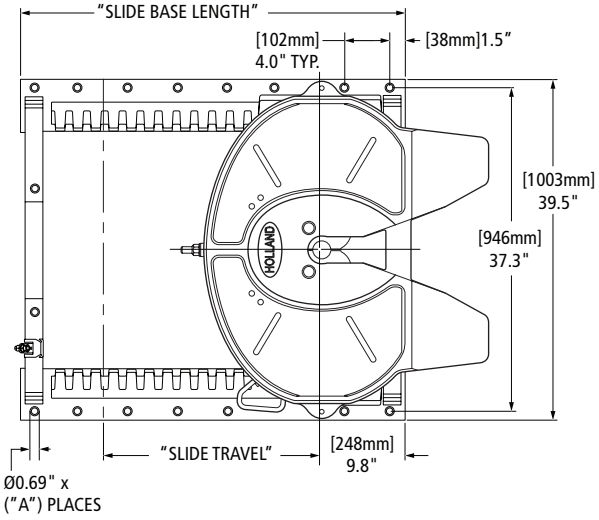

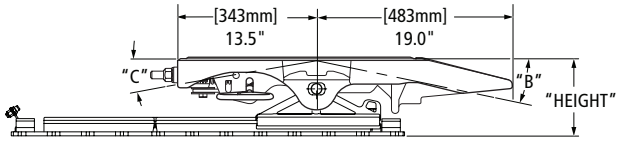

STANDARD OPTION CODES Replaces the Underscore (__) on the new and legacy part number.	
NUMBER CODE	DESCRIPTION
00 / Blank	Standard, No Other Options
02	Manual Secondary Lock
28	Dolly Handle
80	Air Release, OEM Replacement, Left-Hand Only
86	Air Release, New Installations, Left-Hand Only
1A	Manual Secondary Lock and Air Release
EL	Electronic Lock Indicator
EA	Electronic Lock Indicator and Air Release

ILS FW PART NUMBER◊	LEGACY		HEIGHT IN [MM]	SLIDE TRAVEL IN [MM]	SLIDE BASE LENGTH IN [MM]	A # OF HOLES	B	C	REPLACEMENT SLIDE BASE AND BRACKET**	REPLACEMENT SLIDE BASE**	REPLACEMENT BRACKET**	FW WEIGHT LBS [KG]
	TRADITIONAL PART NUMBER (AIR RELEASE)*◊	TRADITIONAL PART NUMBER (MANUAL RELEASE)*◊										
FW31A712XL__	FW31-8003T1L__	FW31-8013T1L__	7.1" [180]	12" [305]	31" [787]	16	8°	8°	XA-A712	XA-A12	RK-10689-1	440.00 [199.58]
FW31A724XL__	FW31-8003T3L__	FW31-8013T3L__		24" [610]	43" [1092]	22			XA-A724	XA-A24		474.00 [215.00]
FW31A736XL__	FW31-8003T4L__	FW31-8013T4L__		36" [915]	55" [1397]	28			XA-A736	XA-A36		507.00 [229.97]
FW31A748XL__	FW31-8003T5L__	FW31-8013T5L__		48" [1219]	67" [1702]	34			XA-A748	XA-A48		541.00 [245.39]
FW31A812XL__	FW31-8002T1L__	FW31-8012T1L__	8.1" [206]	12" [305]	31" [787]	16	12°	10°	XA-A812	XA-A12	RK-10689-2	445.00 [201.85]
FW31A824XL__	FW31-8002T3L__	FW31-8012T3L__		24" [610]	43" [1092]	22			XA-A824	XA-A24		479.00 [217.27]
FW31A836XL__	FW31-8002T4L__	FW31-8012T4L__		36" [915]	55" [1397]	28			XA-A836	XA-A36		512.00 [232.24]
FW31A848XL__	FW31-8002T5L__	FW31-8012T5L__		48" [1219]	67" [1702]	34			XA-A848	XA-A48		546.00 [247.66]
FW31A912XL__	FW31-8001T1L__	FW31-8011T1L__	9.1" [231]	12" [305]	31" [787]	16	15°	12°	XA-A912	XA-A12	RK-10689-3	449.00 [203.66]
FW31A924XL__	FW31-8001T3L__	FW31-8011T3L__		24" [610]	43" [1092]	22			XA-A924	XA-A24		483.00 [219.09]
FW31A936XL__	FW31-8001T4L__	FW31-8011T4L__		36" [915]	55" [1397]	28			XA-A936	XA-A36		516.00 [234.05]
FW31A948XL__	FW31-8001T5L__	FW31-8011T5L__		48" [1219]	67" [1702]	34			XA-A948	XA-A48		550.00 [249.48]

◊ For right-hand release fifth wheels, change "L" to "R" in part number.
* No longer available
** See bracket section for more information.

XL-FW10081PM-en-US Rev D 2016-03-01 Amendments and errors reserved. © SAF-HOLLAND, Inc.

FW31 Sliding ILS Inboard Mount for Angle

Also Available With Angle Later In This Section.



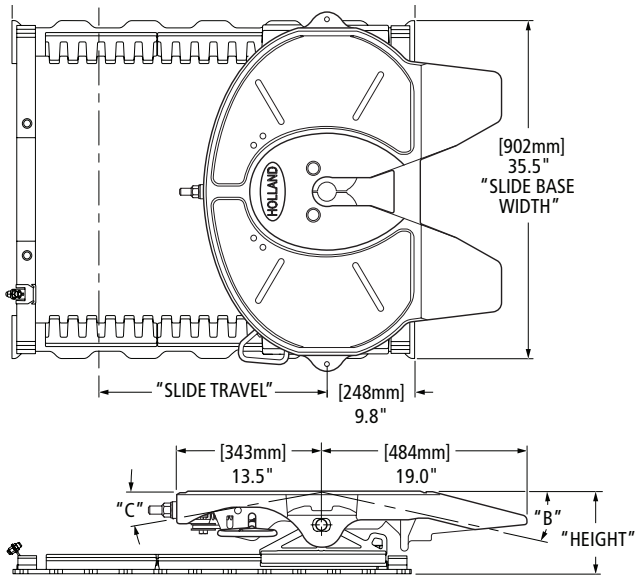

STANDARD OPTION CODES Replaces the Underscore (__) on the new and legacy part number.	
NUMBER CODE	DESCRIPTION
00 / Blank	Standard, No Other Options
02	Manual Secondary Lock
28	Dolly Handle
80	Air Release, OEM Replacement, Left-Hand Only
86	Air Release, New Installations, Left-Hand Only
1A	Manual Secondary Lock and Air Release

ILS FW PART NUMBER◊	LEGACY		HEIGHT IN [MM]	SLIDE TRAVEL IN [MM]	SLIDE BASE LENGTH IN [MM]	B	C	REPLACEMENT SLIDE BASE AND BRACKET**	REPLACEMENT SLIDE BASE**	REPLACEMENT BRACKETS**	FW WEIGHT LBS [KG]
	TRADITIONAL PART NUMBER (AIR RELEASE)*◊	TRADITIONAL PART NUMBER (MANUAL RELEASE)*◊									
FW31B712XL__	FW31-7003X1L__	FW31-7013X1L__	7.1" [180]	12.0" [305]	31" [787]	8°	8°	XA-B712	XA-B12	RK-10689-1	424.00 [192.32]
FW31B724XL__	FW31-7003X2L__	FW31-7013X2L__		24.0" [610]	43" [1092]			XB-B724	XA-B24		452.00 [205.02]
FW31B736XL__	FW31-7003X4L__	FW31-7013X4L__		36.0" [915]	55" [1397]			XA-B736	XA-B36		480.00 [217.72]
FW31B748XL__	FW31-7003X5L__	FW31-7013X5L__		48.0" [1219]	67" [1702]			XA-B748	XA-B48		508.00 [230.42]
FW31B812XL__	FW31-7002X1L__	FW31-7012X1L__	8.1" [206]	12.0" [305]	31" [787]	12°	10°	XA-B812	XA-B12	RK-10689-2	429.00 [194.59]
FW31B824XL__	FW31-7002X2L__	FW31-7012X2L__		24.0" [610]	43" [1092]			XA-B824	XA-B24		457.00 [207.29]
FW31B836XL__	FW31-7002X4L__	FW31-7012X4L__		36.0" [915]	55" [1397]			XA-B836	XA-B36		485.00 [219.99]
FW31B848XL__	FW31-7002X5L__	FW31-7012X5L__		48.0" [1219]	67" [1702]			XA-B848	XA-B48		513.00 [232.69]
FW31B912XL__	FW31-7001X1L__	FW31-7011X1L__	9.1" [231]	12.0" [305]	31" [787]	15°	12°	XA-B912	XA-B12	RK-10689-3	433.00 [196.41]
FW31B924XL__	FW31-7001X2L__	FW31-7011X2L__		24.0" [610]	43" [1092]			XA-B924	XA-B24		461.00 [209.11]
FW31B936XL__	FW31-7001X4L__	FW31-7011X4L__		36.0" [915]	55" [1397]			XA-B936	XA-B36		489.00 [221.81]
FW31B948XL__	FW31-7001X5L__	FW31-7011X5L__		48.0" [1219]	67" [1702]			XA-B948	XA-B48		517.00 [234.51]

◊ For right-hand release fifth wheels, change "L" to "R" in part number.
* No longer available
** See bracket section for more information.

 Amendments and errors reserved. © SAF-HOLLAND, Inc.

FW31 Sliding Traditional Outboard Mount

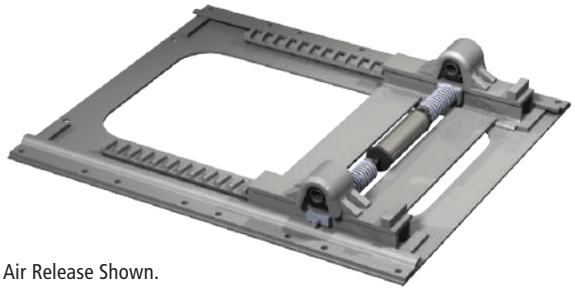

Air Release Shown.

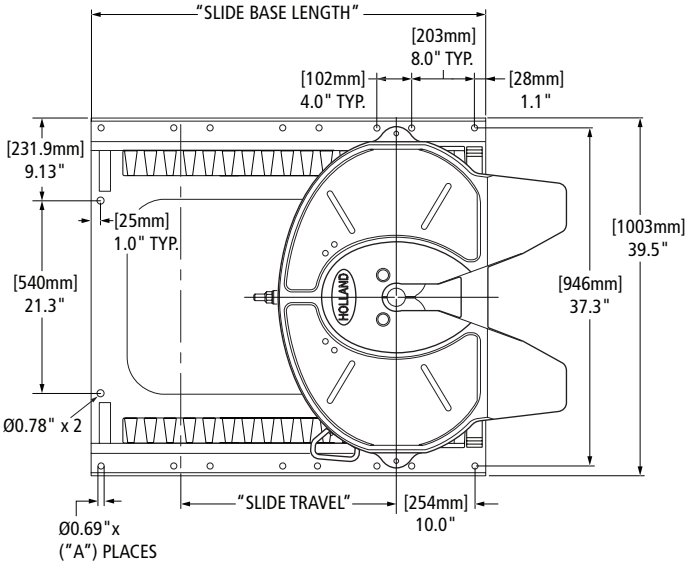

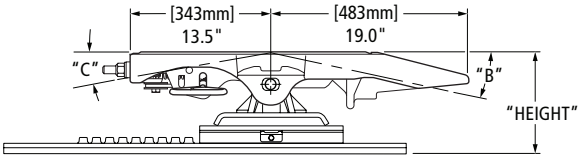

STANDARD OPTION CODES Replaces the Underscore (__) on the new and legacy part number.	
NUMBER CODE	**DESCRIPTION**
00 / Blank	Standard, No Other Options
02	Manual Secondary Lock
28	Dolly Handle
47	Tilt Stops
80	Air Release, OEM Replacement Left-Hand Only
86	Air Release, Aftermarket Installations, Air Control Modules Included Left-Hand Only

STANDARD OPTION CODES Replaces the Underscore (__) on the new and legacy part number.	
NUMBER CODE	**DESCRIPTION**
0G	Plunger Dip Control
1A	Manual Secondary Lock and Air Release
EL	Electronic Lock Indicator
EA	Electronic Lock Indicator and Air Release, OEM Replacement Left-Hand Only

LEGACY FW PART NUMBER*◊	REPLACED BY ILS FW PART NUMBER◊	SLIDE BRACKET TYPE	HEIGHT IN [MM]	SLIDE TRAVEL IN [MM]	SLIDE BASE LENGTH IN [MM]	A # OF HOLES	B	C	REPLACEMENT SLIDE BASE AND BRACKET**	REPLACEMENT SLIDE BASE**	REPLACEMENT BRACKETS**	FW WEIGHT LBS [KG]
FW31-8003T1L__	FW31A712XL__	Air Release	7.0" [178]	10.7" [272]	42.2" [1072]	16	14°†	7°	—	XA-07871-1L	XA-7003	488.00 [221.35]
FW31-8003T2L__	FW31A724XL__			16.8" [427]	50.2" [1275]	18			—	XA-07871-2L		510.00 [231.33]
FW31-8003T3L__	FW31A724XL__			24.5" [622]	55.2" [1402]	20			—	XA-07871-3L		536.00 [243.13]
FW31-8003T4L__	FW31A736XL__			41.3" [1049]	74.2" [1885]	26			—	XA-07871-4L		589.00 [267.17]
FW31-8002T1L__	FW31A812XL__		8.0" [203]	12.2" [310]	34.2" [869]	12	14°†	19°	—	XA-07871-1	XA-7002	484.00 [219.54]
FW31-8002T2L__	FW31A824XL__			18.4" [467]	42.2" [1072]	16			—	XA-07871-2		498.00 [225.89]
FW31-8002T3L__	FW31A824XL__			24.5" [622]	46.2" [1173]	16			—	XA-07871-3		529.00 [239.95]
FW31-8002T4L__	FW31A836XL__			36.7" [932]	58.2" [1478]	20			—	XA-07871-4		553.00 [250.84]
FW31-8002T5L__	FW31A848XL__			48.9" [1242]	70.2" [1783]	24			—	XA-07871-5		593.00 [268.98]

◊ For right-hand release fifth wheels, change "L" to "R" in part number.
† If Option Code 47 Dimension Changes to 8°
* No longer available if replacement exists.
** See bracket section for more information.

XL-FW10081PM-en-US Rev D 2016-03-01 Amendments and errors reserved. © SAF-HOLLAND, Inc.

LEGACY FW PART NUMBER *◊	REPLACED BY ILS FW PART NUMBER◊	SLIDE BRACKET TYPE	HEIGHT IN [MM]	SLIDE TRAVEL IN [MM]	SLIDE BASE LENGTH IN [MM]	A # OF HOLES	B	C	REPLACEMENT SLIDE BASE AND BRACKET**	REPLACEMENT SLIDE BASE**	REPLACEMENT BRACKETS**	FW WEIGHT LBS [KG]
FW31-8001T1L__	FW31A912XL__	Air Release	9.0" [229]	12.2" [310]	34.2" [869]	12	17°†	19°	—	XA-07871-1	XA-7001	468.00 [212.28]
FW31-8001T2L__	FW31A924XL__			18.4" [467]	42.2" [1072]	16			—	XA-07871-2		482.00 [218.63]
FW31-8001T3L__	FW31A924XL__			24.5" [622]	46.2" [1173]	16			—	XA-07871-3		513.00 [232.69]
FW31-8001T4L__	FW31A936XL__			36.7" [932]	58.2" [1478]	20			—	XA-07871-4		537.00 [243.58]
FW31-8001T5L__	FW31A948XL__			48.9" [1242]	70.2" [1783]	24			—	XA-07871-5		577.00 [261.72]
FW31-8301T1L__	—		8.5" [216]	10.7" [272]	42.2" [1072]	16	16°	15°	XA-8311-T1	XA-07871-1L	XA-7301	495.00 [224.53]
FW31-8301T2L__	—			16.8" [427]	50.2" [1275]	18			XA-8311-T2	XA-07871-2L		517.00 [234.51]
FW31-8301T3L__	—			24.5" [622]	55.2" [1402]	20			XA-8311-T3	XA-07871-3L		543.00 [246.30]
FW31-8301T4L__	—			41.3" [1049]	74.2" [1885]	26			XA-8311-T4	XA-07871-4L		596.00 [270.34]
FW31-8009T2L__	—		10.5" [318]	13.8" [351]	42.2" [1072]	16	21°	22°	XA-8301-T1	XA-07871-2	XA-7009	513.00 [232.69]
FW31-8009T3L__	—			19.9" [505]	46.2" [1173]	16			XA-8301-T2	XA-07871-3		544.00 [246.75]
FW31-8009T4L__	—			32.1" [815]	58.2" [1478]	20			XA-8301-T3	XA-07871-4		568.00 [257.64]
FW31-8009T5L__	—			44.4" [1128]	70.2" [1783]	24			XA-8301-T4	XA-07871-5		608.00 [275.78]
FW31-8013T1L__	FW31A712XL__	Manual Release	7.0" [178]	10.7" [272]	42.2" [1072]	16	14°†	7°	—	XA-07871-1L	XA-7013	495.00 [224.53]
FW31-8013T2L__	FW31A724XL__			16.8" [427]	50.2" [1275]	18			—	XA-07871-2L		517.00 [234.51]
FW31-8013T3L__	FW31A724XL__			24.5" [622]	55.2" [1402]	20			—	XA-07871-3L		543.00 [246.30]
FW31-8013T4L__	FW31A736XL__			41.3" [1049]	74.2" [1885]	26			—	XA-07871-4L		596.00 [270.34]
FW31-8012T1L__	FW31A812XL__		8.0" [203]	12.2" [310]	34.2" [869]	12	14°†	19°	—	XA-07871-1	XA-7012	470.00 [213.19]
FW31-8012T2L__	FW31A824XL__			18.4" [467]	42.2" [1072]	16			—	XA-07871-2		484.00 [219.54]
FW31-8012T3L__	FW31A824XL__			24.5" [622]	46.2" [1173]	16			—	XA-07871-3		515.00 [233.60]
FW31-8012T4L__	FW31A836XL__			58.2" [1478]	36.7" [932]	20			—	XA-07871-4		539.00 [244.49]
FW31-8012T5L__	FW31A848XL__			48.8" [1240]	70.2" [1783]	24			—	XA-07871-5		579.00 [262.63]
FW31-8011T1L__	FW31A912XL__		9.0" [229]	12.2" [310]	34.2" [869]	12	17°†	19°	—	XA-07871-1	XA-7011	475.00 [215.46]
FW31-8011T2L__	FW31A924XL__			18.4" [467]	42.2" [1072]	16			—	XA-07871-2		489.00 [221.81]
FW31-8011T3L__	FW31A924XL__			46.2" [1173]	24.5" [622]	16			—	XA-07871-3		520.00 [235.87]
FW31-8011T4L__	FW31A936XL__			36.7" [932]	58.2" [1478]	20			—	XA-07871-4		544.00 [246.75]
FW31-8011T5L__	FW31A948XL__			48.9" [1242]	70.2" [1783]	24			—	XA-07871-5		584.00 [264.90]
FW31-8311T1L__	—		8.5" [216]	10.7" [272]	42.2" [1072]	16	16°	15°	XA-8311-T1	XA-07871-1L	XA-7311	502.00 [227.70]
FW31-8311T2L__	—			16.8" [427]	50.2" [1275]	18			XA-8311-T2	XA-07871-2L		524.00 [237.68]
FW31-8311T3L__	—			24.5" [622]	55.2" [1402]	20			XA-8311-T3	XA-07871-3L		550.00 [249.48]
FW31-8311T4L__	—			41.3" [1049]	74.2" [1885]	26			XA-8311-T4	XA-07871-4L		603.00 [273.52]
FW31-8019T2L__	—		10.5" [318]	13.8" [351]	42.2" [1072]	16	21°	21°	XA-8019-T2	XA-07871-2	XA-7019	520.00 [235.87]
FW31-8019T3L__	—			19.9" [505]	46.2" [1173]	16			XA-8019-T3	XA-07871-3		551.00 [249.93]
FW31-8019T4L__	—			32.1" [815]	58.2" [1478]	20			XA-8019-T4	XA-07871-4		575.00 [260.82]
FW31-8019T5L__	—			44.4" [1128]	70.2" [1783]	24			XA-8019-T5	XA-07871-5		615.00 [278.96]

◊ For right-hand release fifth wheels, change "L" to "R" in part number.
† If Option Code 47 Dimension Changes to 8°
* No longer available if replacement exists.
** See bracket section for more information.

 Amendments and errors reserved. © SAF-HOLLAND, Inc.

FW31 Sliding Traditional Inboard for Angle Mount

Also Available With Angle Later In This Section.

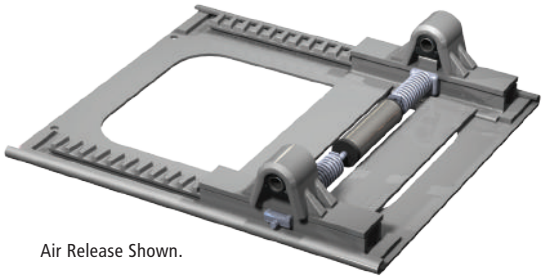

Air Release Shown.

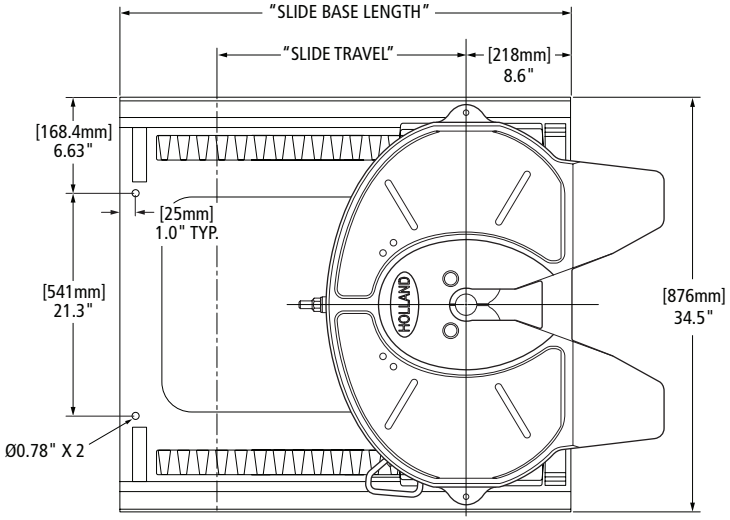

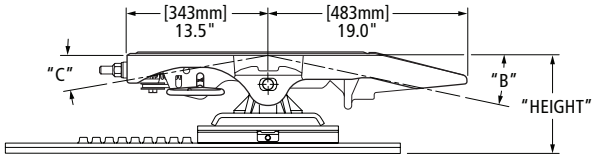

STANDARD OPTION CODES Replaces the Underscore (__) on the new and legacy part number.	
NUMBER CODE	**DESCRIPTION**
00 / Blank	Standard, No Other Options
02	Manual Secondary Lock
80	Air Release, OEM Replacement, Left-Hand Only
86	Air Release, Aftermarket Installations, Air Control Modules Included, Left-Hand Only
90	Weight Saver Cutout and Air Release, OEM Replacement, Left-Hand Only
1A	Manual Secondary Lock and Air Release

LEGACY FW PART NUMBER*◊	REPLACED BY ILS FW PART NUMBER◊	SLIDE BRACKET TYPE	HEIGHT IN [MM]	SLIDE TRAVEL IN [MM]	SLIDE BASE LENGTH IN [MM]	B	C	REPLACEMENT SLIDE BASE AND BRACKET**	REPLACEMENT SLIDE BASE**	REPLACEMENT BRACKETS**	FW WEIGHT LBS [KG]
FW31-7003X1L__	FW31B712XL__	Air Release	7.0" [178]	10.7" [272]	38.9" [988]	11°	7°				474.00 [215.00]
FW31-7003X2L__	FW31B724XL__			16.8" [427]	45.0" [1143]						488.00 [221.35]
FW31-7003X3L__	FW31B724XL__			24.5" [622]	52.6" [1336]						508.00 [230.42]
FW31-7003X4L__	FW31B736XL__			41.3" [1049]	69.5" [1765]						530.00 [240.40]
FW31-7003X5L__	FW31B748XL__			53.6" [1361]	82.0" [2082]						596.00 [270.34]
FW31-7003X6L__	—			65.8" [1671]	94.0" [2387]						646.00 [293.02]
FW31-7002X1L__	FW31B812XL__		8.0" [203]	12.2" [310]	32.8" [833]	14°	19°				479.00 [217.27]
FW31-7002X2L__	FW31B824XL__			18.4" [467]	38.9" [988]						515.00 [233.60]
FW31-7002X3L__	FW31B824XL__			24.5" [622]	45.0" [1143]						536.00 [243.13]
FW31-7002X4L__	FW31B836XL__			36.7" [932]	57.2" [1452]						583.00 [264.44]
FW31-7002X5L__	FW31B848XL__			48.9" [1242]	69.5" [1765]						644.00 [292.11]
FW31-7002X6L__	—			61.2" [1554]	82.0" [2082]						688.00 [312.07]
FW31-7002X7L__	—			73.4" [1864]	94.0" [2387]						753.00 [341.56]

◊ For right-hand release fifth wheels, change "L" to "R" in part number.
* No longer available if replacement exists.
** See bracket section for more information.

XL-FW10081PM-en-US Rev D 2016-03-01 Amendments and errors reserved. © SAF-HOLLAND, Inc.

LEGACY FW PART NUMBER*◊	REPLACED BY ILS FW PART NUMBER◊	SLIDE BRACKET TYPE	HEIGHT IN [MM]	SLIDE TRAVEL IN [MM]	SLIDE BASE LENGTH IN [MM]	B	C	REPLACEMENT SLIDE BASE AND BRACKET**	REPLACEMENT SLIDE BASE**	REPLACEMENT BRACKETS**	FW WEIGHT LBS [KG]
FW31-7001X1L__	FW31B912XL__	Air Release	9.0" [229]	12.2" [310]	32.8" [833]	16°	19°	—	XA-0750-1	XA-7001	490.00 [222.26]
FW31-7001X2L__	FW31B924XL__			18.4" [467]	38.9" [988]			—	XA-0750-2		526.00 [238.59]
FW31-7001X3L__	FW31B924XL__			24.5" [622]	45.0" [1143]			—	XA-0750-3		542.00 [245.85]
FW31-7001X4L__	FW31B936XL__			36.7" [932]	57.2" [1452]			—	XA-0750-4		594.00 [269.43]
FW31-7001X5L__	FW31B948XL__			48.9" [1242]	69.5" [1765]			—	XA-0750-5		655.00 [297.10]
FW31-7001X6L__	—			61.2" [1554]	82.0" [2082]			XA-7001-X6	XA-0750-6		699.00 [317.06]
FW31-7301X1L__	—		8.5" [216]	10.7" [272]	38.9" [988]	11°	7°	XA-7301-X1	XA-0751-1	XA-7301	474.00 [215.00]
FW31-7301X2L__	—			16.8" [427]	45.0" [1143]			XA-7301-X2	XA-0751-2		488.00 [221.35]
FW31-7301X3L__	—			24.5" [622]	52.6" [1336]			XA-7301-X3	XA-0751-3A		508.00 [230.42]
FW31-7301X4L__	—			41.3" [1049]	69.5" [1765]			XA-7301-X4	XA-0751-4		530.00 [240.40]
FW31-7301X5L__	—			53.6" [1361]	82.0" [2082]			XA-7301-X5	XA-0751-5		590.00 [267.62]
FW31-7301X6L__	—			65.8" [1671]	94.0" [2387]			XA-7301-X6	XA-0751-6		646.00 [293.02]
FW31-7009X2L__	—		10.5" [318]	13.8" [351]	38.9" [988]	21°	22°	XA-7009-X2	XA-0750-2	XA-7009	554.00 [251.29]
FW31-7009X3L__	—			19.9" [505]	45.0" [1143]			XA-7009-X3	XA-0750-3		576.00 [261.27]
FW31-7009X4L__	—			32.1" [815]	57.2" [1452]			XA-7009-X4	XA-0750-4		628.00 [284.86]
FW31-7009X5L__	—			44.4" [1128]	69.5" [1765]			XA-7009-X5	XA-0750-5		683.00 [309.80]
FW31-7009X6L__	—			56.6" [1438]	82.0" [2082]			XA-7009-X6	XA-0750-6		733.00 [332.48]
FW31-7013X1L__	FW31B712XL__	Manual Release	7.0" [178]	10.7" [272]	38.9" [988]	11°	5°	—	XA-0751-1	XA-7013	483.00 [219.09]
FW31-7013X2L__	FW31B724XL__			16.8" [427]	45.0" [1143]			—	XA-0751-2		497.00 [225.44]
FW31-7013X3L__	FW31B724XL__			24.5" [622]	52.6" [1336]			—	XA-0751-3A		517.00 [234.51]
FW31-7013X4L__	FW31B736XL__			41.3" [1049]	69.5" [1765]			—	XA-0751-4		539.00 [244.49]
FW31-7013X5L__	FW31B748XL__			53.6" [1361]	82.0" [2082]			—	XA-0751-5		599.00 [271.70]
FW31-7013X6L__	—			65.8" [1671]	94.0" [2387]			XA-7013-X6	XA-0751-6		655.00 [297.10]
FW31-7012X1L__	FW31B812XL__		8.0" [203]	12.2" [310]	32.8" [833]	14°	11°	—	XA-0750-1	XA-7012	488.00 [221.35]
FW31-7012X2L__	FW31B824XL__			18.4" [467]	38.9" [988]			—	XA-0750-2		518.00 [234.96]
FW31-7012X3L__	FW31B824XL__			24.5" [622]	45.0" [1143]			—	XA-0750-3		540.00 [244.94]
FW31-7012X4L__	FW31B836XL__			36.7" [932]	57.2" [1452]			—	XA-0750-4		592.00 [268.53]
FW31-7012X5L__	FW31B848XL__			48.9" [1242]	69.5" [1765]			—	XA-0750-5		647.00 [293.47]
FW31-7012X6L__	—			61.2" [1554]	82.0" [2082]			XA-7012-X6	XA-0750-6		697.00 [316.15]
FW31-7011X1L__	FW31B912XL__		9.0" [229]	12.2" [310]	32.8" [833]	16°	19°	—	XA-0750-1	XA-7011	494.00 [224.07]
FW31-7011X2L__	FW31B924XL__			18.4" [467]	38.9" [988]			—	XA-0750-2		524.00 [237.68]
FW31-7011X3L__	FW31B924XL__			24.5" [622]	45.0" [1143]			—	XA-0750-3		546.00 [247.66]
FW31-7011X4L__	FW31B936XL__			36.7" [932]	57.2" [1452]			—	XA-0750-4		597.00 [270.79]
FW31-7011X5L__	FW31B948XL__			48.9" [1242]	69.5" [1765]			—	XA-0750-5		653.00 [296.20]
FW31-7011X6L__	—			61.2" [1554]	82.0" [2082]			XA-7011-X6	XA-0750-6		703.00 [318.88]
FW31-7311X1L__	—		8.5" [216]	10.7" [272]	38.9" [988]	11°	7°	XA-7311-X1	XA-0751-1	XA-7311	490.00 [222.26]
FW31-7311X2L__	—			16.8" [427]	45.0" [1143]			XA-7311-X2	XA-0751-2		504.00 [228.61]
FW31-7311X3L__	—			24.5" [622]	52.6" [1336]			XA-7311-X3	XA-0751-3A		524.00 [237.68]
FW31-7311X4L__	—			41.3" [1049]	69.5" [1765]			XA-7311-X4	XA-0751-4		546.00 [247.66]
FW31-7311X5L__	—			53.6" [1361]	82.0" [2082]			XA-7311-X5	XA-0751-5		606.00 [274.88]
FW31-7311X6L__	—			65.8" [1671]	94.0" [2387]			XA-7311-X6	XA-0751-6		662.00 [300.28]
FW31-7019X2L__	—		10.5" [318]	13.8" [351]	38.9" [988]	21°	21°	—	XA-0750-2	XA-7019	566.00 [256.73]
FW31-7019X3L__	—			19.9" [505]	45.0" [1143]			—	XA-0750-3		588.00 [266.71]
FW31-7019X4L__	—			32.1" [815]	57.2" [1452]			—	XA-0750-4		640.00 [290.30]
FW31-7019X5L__	—			44.4" [1128]	69.5" [1765]			—	XA-0750-5		695.00 [315.25]
FW31-7019X6L__	—			56.6" [1438]	82.0" [2082]			—	XA-0750-6		745.00 [337.93]

◊ For right-hand release fifth wheels, change "L" to "R" in part number.
* No longer available if replacement exists.
** See bracket section for more information.

 Amendments and errors reserved. © SAF-HOLLAND, Inc.

FW31 Stationary Kompensator Outboard Plate Mount



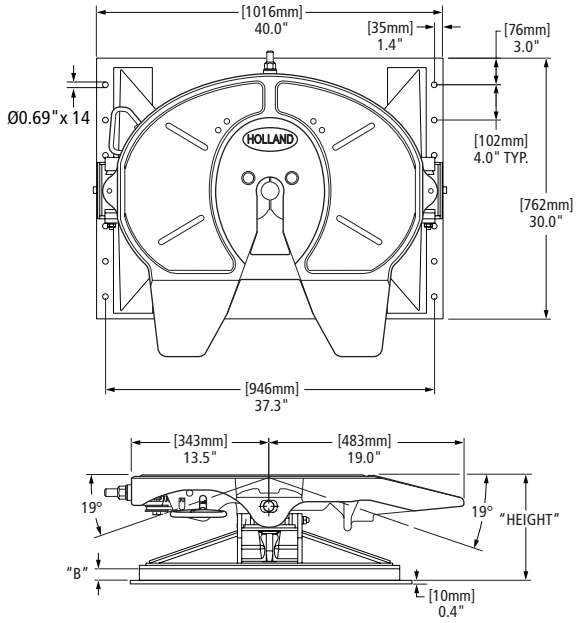

STANDARD OPTION CODES Replaces the Underscore (__) on the part number.	
NUMBER CODE	DESCRIPTION
Blank	Standard, No Other Options
02	Manual Secondary Lock
13	Kompensator Dust Covers
19	Komp Lockouts
27	Manual Secondary Lock and Komp Lockouts
E9	Electronic Lock Indicator and Komp Lockouts
EL	Electronic Lock Indicator

PART NUMBER◊	HEIGHT IN [MM]	B	REPLACEMENT BRACKET**	FW WEIGHT LBS [KG]
FW31-7726XL__	13.1" [333]	3.00"	XA-40-7726	689.00 [312.53]
FW31-7727XL__	12.1" [307]	2.0"	XA-40-7727	661.00 [299.82]
FW31-7729XL__	10.1" [257]	— +	XA-40-7729	613.00 [278.05]

◊ For right-hand release fifth wheels, change "L" to "R" in part number.
+ Kompensator frame is mounted directly to plate, and extends 1.17" below bottom of plate.
** See bracket section for more information.

NOTE: See Customer Service for viable combinations.

FW31 Stationary Kompensator Inboard Plate Mount for Angle Mounting



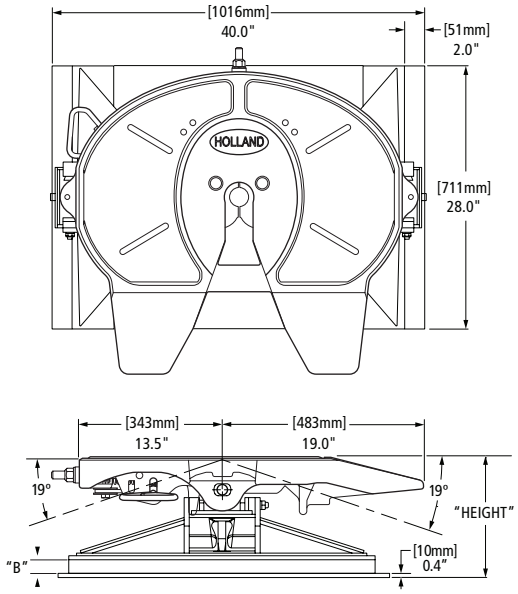

STANDARD OPTION CODES Replaces the Underscore (__) on the part number.	
NUMBER CODE	DESCRIPTION
Blank	Standard, No Other Options
02	Manual Secondary Lock
13	Kompensator Dust Covers
19	Komp Lockouts
27	Manual Secondary Lock and Komp Lockouts
E9	Electronic Lock Indicator and Komp Lockouts
EL	Electronic Lock Indicator

PART NUMBER◊	HEIGHT IN [MM]	B	REPLACEMENT BRACKET**	FW WEIGHT LBS [KG]
FW31-7721XL__	13.1" [333]	3.0"	XA-40-7724	685.00 [310.71]
FW31-7722XL__	12.1" [307]	2.0"	XA-40-7722	657.00 [298.01]
FW31-7723XL__	10.1" [257]	— +	XA-40-7723	605.00 [274.42]

◊ For right-hand release fifth wheels, change "L" to "R" in part number.
+ Kompensator frame is mounted directly to plate, and extends 1.17" below bottom of plate.
** See bracket section for more information.

NOTE: See Customer Service for viable combinations.

XL-FW10081PM-en-US Rev D 2016-03-01 Amendments and errors reserved. © SAF-HOLLAND, Inc.

FW31 Stationary Kompensator Inboard for Angle Mount

Also Available With Angle Later In This Section.



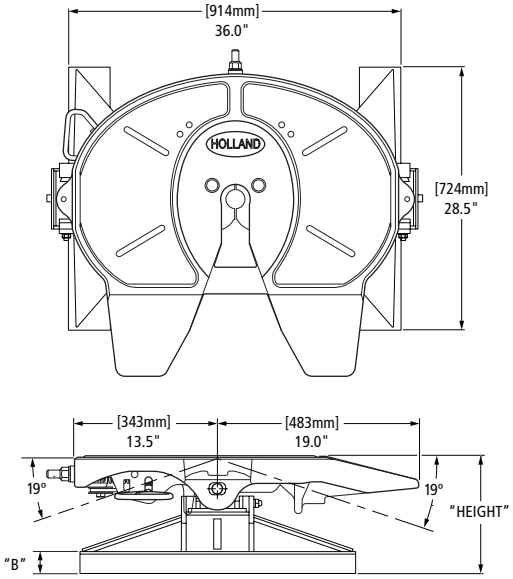

STANDARD OPTION CODES Replaces the Underscore (__) on the part number.	
NUMBER CODE	DESCRIPTION
Blank	Standard, No Other Options
02	Manual Secondary Lock
13	Kompensator Dust Covers
19	Komp Lockouts
80	Air Release, OEM Replacement, Left-Hand Only
82	Drilled and Tapped with Cross Drilled Hole
86	Air Release, Aftermarket Installations, Air Control Modules Included, Left-Hand Only
1A	Manual Secondary Lock and Air Release

PART NUMBER◊	HEIGHT IN [MM]	B	REPLACEMENT BRACKET**	FW WEIGHT LBS [KG]
FW31-7701XL__	12.6" [320]	3.0"	XA-40-7701	562.00 [254.92]
FW31-7702XL__	11.6" [295]	2.0"	XA-40-7702	547.00 [248.12]
FW31-7703XL__	9.7" [246]	— +	XA-40-7703	505.00 [229.06]

◊ For right-hand release fifth wheels, change "L" to "R" in part number.
+ Kompensator frame is mounted directly to plate, and extends 1.17" below bottom of plate.
** See bracket section for more information.

NOTE: See Customer Service for viable combinations.

FW31 Sliding Kompensator Inboard for Angle Mount

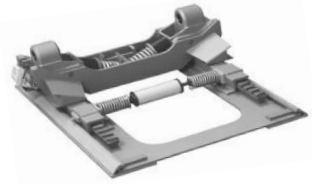

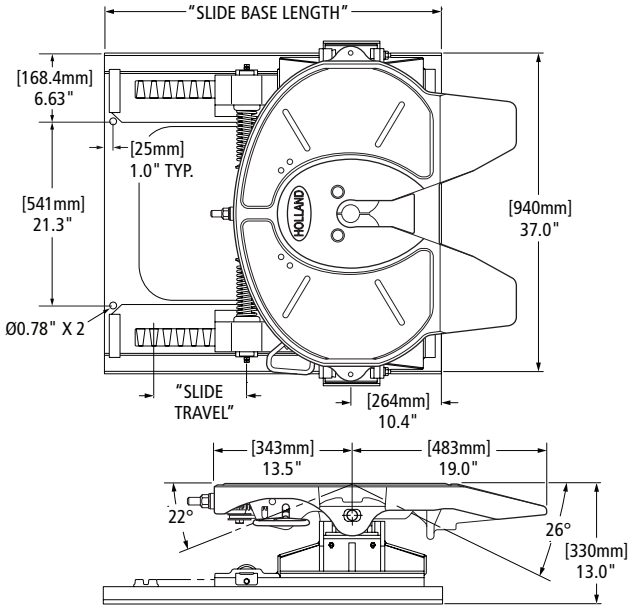

STANDARD OPTION CODES Replaces the Underscore (__) on the part number.	
NUMBER CODE	DESCRIPTION
Blank	Standard, No Other Options
02	Manual Secondary Lock
19	Komp Lockouts
27	Manual Secondary Lock and Komp Lockouts
80	Air Release, OEM Replacement, Left-Hand Only

PART NUMBER◊	SLIDE TRAVEL IN [MM]	SLIDE BASE LENGTH IN [MM]	REPLACEMENT SLIDE BASE**	REPLACEMENT BRACKET**	FW WEIGHT LBS [KG]
FW31-7201X1L__	10.7" [272]	38.9" [988]	XA-0284-1	XA-7201	849.00 [385.10]
FW31-7201X2L__	16.8" [427]	45.0" [1143]	XA-0284-2		869.00 [394.17]
FW31-7201X3L__	24.5" [622]	52.6" [1336]	XA-0284-3A		925.00 [419.57]
FW31-7201X4L__	41.3" [1049]	69.5" [1765]	XA-0284-4		946.00 [429.10]
FW31-7201X5L__	53.6" [1361]	82.0" [2082]	XA-0284-5		1060.00 [480.81]
FW31-7201X6L__	65.8" [1671]	94.0" [2387]	XA-0284-6		1159.00 [525.71]

◊ For right-hand release fifth wheels, change "L" to "R" in part number.
** See bracket section for more information.

NOTE: See Customer Service for viable combinations.

 Amendments and errors reserved. © SAF-HOLLAND, Inc.

FW31 Stationary Brackets with Angle Mount



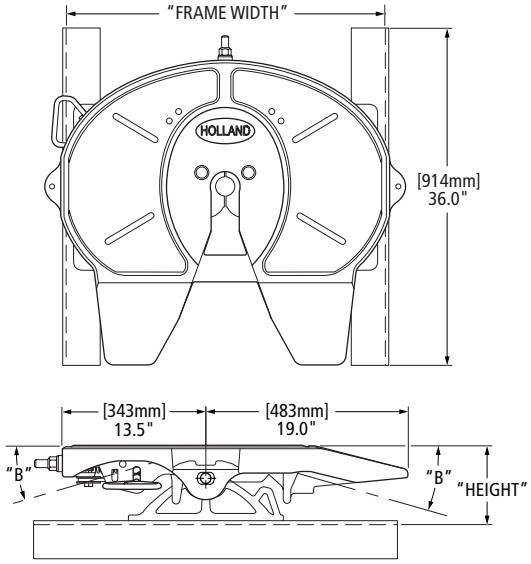

Frame width "A-G": .38" x 4" x 4" angle dimensions
"H-N": .38" x 4" x 6" angle dimensions
See option chart for other options.

STANDARD OPTION CODES Replaces the Underscore (__) on the new and legacy part number.	
NUMBER CODE	DESCRIPTION
00 / Blank	Standard, No Other Options
02	Manual Secondary Lock
28	Dolly Handle
80	Air Release, OEM Replacement, Left-Hand Only
86	Air Release, New installations, Left-Hand Only
1A	Manual Secondary Lock and Air Release
21	.38" x 5" x 5" Angle
51	.38" x 4" x 6" Angle
45	Manual Secondary Lock and .38" x 5" x 5" Angle
EL	Electronic Lock Indicator

FRAME WIDTH CODE CHART					
CODE	FRAME WIDTH IN [MM]	CODE	FRAME WIDTH IN [MM]	CODE	FRAME WIDTH IN [MM]
A	33.25" [845]	F	33.88" [861]	L	34.50" [876]
B	33.38" [848]	**G†**	**34.00" [864]**	M	34.62" [879]
C	33.50" [851]	H	34.12" [867]	N	34.75" [883]
D	33.62" [854]	J	34.25" [870]		
E	33.75" [857]	K	34.38" [873]		

† Standard

FW PART NUMBER CAST BRACKET◊	FW PART NUMBER FABRICATED*◊	FRAME WIDTH	HEIGHT IN [MM]	B	REPLACEMENT BRACKETS**	FW WEIGHT LBS [KG]
FW31W600GL__	FW31-7814GL__	34.0" [864]	6.0" [152]	8°	RK-W600-G	350.00 [158.76]
FW31W700GL__	FW31-7813GL__		7.0" [178]	11°	RK-W700-G	356.00 [161.48]
FW31W800GL__	FW31-7812GL__		8.0" [203]	14°	RK-W800-G	361.00 [163.75]
FW31W900GL__	FW31-7811GL__		9.0" [229]	17°	RK-W900-G	366.00 [166.01]
—	FW31-7553GL__		10.8" [274]	15°	XA-7553-G	394.00 [178.72]
—	FW31-7552GL__		11.8" [300]	15°	XA-7552-G	396.00 [179.62]
—	FW31-7551GL__		12.8" [325]	15°	XA-7551-G	404.00 [183.25]

◊ For right-hand release fifth wheels, change "L" to "R" in part number.
* No longer available if cast version exists.
** See bracket section for more information.

XL-FW10081PM-en-US Rev D 2016-03-01 Amendments and errors reserved. © SAF-HOLLAND, Inc.

FW31 Sliding ILS Inboard with Angle Mount

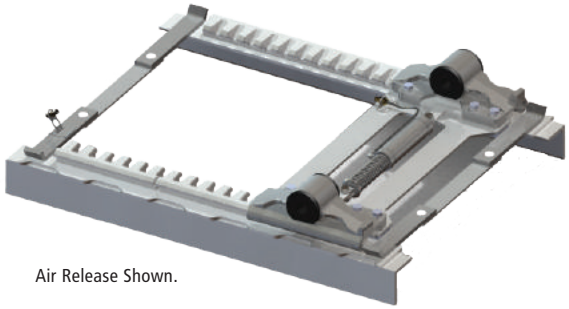

Air Release Shown.

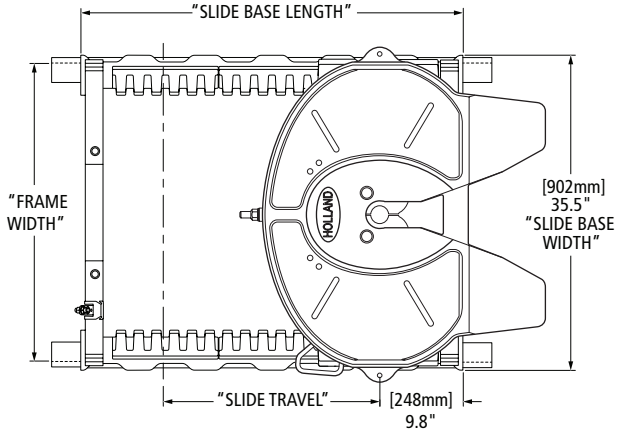

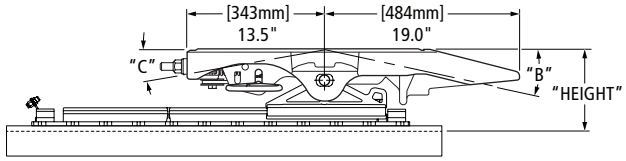

Frame width "A-C": .38" x 3" x 4" angle dimensions
"D-K": .38" x 3.5" x 4" angle dimensions
"K-Q": .38" x 4" x 4" angle dimensions
See option codes for other options.

FRAME WIDTH CODE CHART					
CODE	FRAME WIDTH	CODE	FRAME WIDTH	CODE	FRAME WIDTH
A	33.25" [845]	F	33.88" [861]	L	34.50" [876]
B	33.38" [848]	G†	**34.00" [864]**	M	34.62" [879]
C	33.50" [851]	H	34.12" [867]	N	34.75" [883]
D	33.62" [854]	J	34.25" [870]	P	34.88" [886]
E	33.75" [857]	K	34.38" [873]	Q	35.00"

† Standard

STANDARD OPTION CODES Replaces the Underscore (__) on the new and legacy part number.	
NUMBER CODE	DESCRIPTION
00 / Blank	Standard, No Other Option
02	Manual Secondary Lock
21	.38" x 5" x 5" Angle
30	Manual Secondary Lock and Weight Saver Cutout
51	.38" x 4" x 6" Angle
65	.31" x 4" x 4" Angle

STANDARD OPTION CODES Replaces the Underscore (__) on the new and legacy part number.	
NUMBER CODE	DESCRIPTION
80	Air Release, OEM Replacement, Left-Hand Only
86	Air Release, Aftermarket Installations, Air Control Modules Included, Left-Hand Only

FW PART NUMBER◊	TRADITIONAL SLIDER PART NUMBER (AIR RELEASE)*◊	TRADITIONAL SLIDER PART NUMBER (MANUAL RELEASE)*◊	HGT	SLIDE TRAVEL	SLIDE BASE LENGTH	B	C	REPLACEMENT SLIDE BASE AND BRACKET**	REPLACEMENT SLIDE BASE **	REPLACEMENT BRACKET**	FW WEIGHT LBS [KG]
FW31B712GL__	FW31-7003G1L__	FW31-7013G1L__	7.4" [188]	12.0" [305]	31" [787]	8°	8°	XA-B712G	XA-B12G	RK-10689-1	476.00 [215.91]
FW31B724GL__	FW31-7003G2L__	FW31-7013G2L__		24.0" [610]	43" [1092]			XA-B724G	XA-B24G	RK-10689-1	522.00 [236.78]
FW31B736GL__	FW31-7003G4L__	FW31-7013G4L__		36.0" [915]	55" [1397]			XA-B736G	XA-B36G	RK-10689-1	568.00 [257.64]
FW31B748GL__	FW31-7003G5L__	FW31-7013G5L__		48.0" [1219]	67" [1702]			XA-B748G	XA-B48G	RK-10689-1	614.00 [278.51]
FW31B812GL__	FW31-7002G1L__	FW31-7012G1L__	8.4" [213]	12.0" [305]	31" [787]	12°	10°	XA-B812G	XA-B12G	RK-10689-2	481.00 [218.18]
FW31B824GL__	FW31-7002G2L__	FW31-7012G2L__		24.0" [610]	43" [1092]			XA-B824G	XA-B24G	RK-10689-2	527.00 [239.04]
FW31B836GL__	FW31-7002G4L__	FW31-7012G4L__		36.0" [915]	55" [1397]			XA-B836G	XA-B36G	RK-10689-2	573.00 [259.91]
FW31B848GL__	FW31-7002G5L__	FW31-7012G5L__		48.0" [1219]	67" [1702]			XA-B848G	XA-B48G	RK-10689-2	619.00 [280.77]
FW31B912GL__	FW31-7001G1L__	FW31-7011G1L__	9.4" [239]	12.0" [305]	31" [787]	15°	12°	XA-B912G	XA-B12G	RK-10689-3	485.00 [219.99]
FW31B924GL__	FW31-7001G2L__	FW31-7011G2L__		24.0" [610]	43" [1092]			XA-B924G	XA-B24G	RK-10689-3	513.00 [232.69]
FW31B936GL__	FW31-7001G4L__	FW31-7011G4L__		36.0" [915]	55" [1397]			XA-B936G	XA-B36G	RK-10689-3	577.00 [261.72]
FW31B948GL__	FW31-7001G5L__	FW31-7011G5L__		48.0" [1219]	67" [1702]			XA-B948G	XA-B48G	RK-10689-3	623.00 [282.59]

◊ For right-hand release fifth wheels, change "L" to "R" in part number.
* No longer available if cast version exists.
** See bracket section for more information.

 Amendments and errors reserved. © SAF-HOLLAND, Inc.

FW31 Sliding Traditional Inboard with Angle Mount

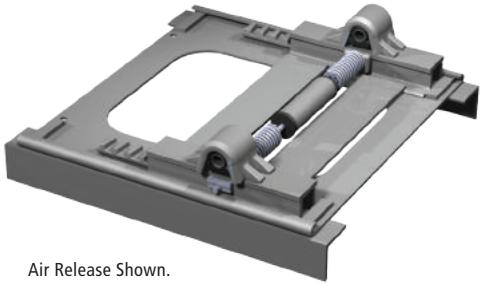

Air Release Shown.

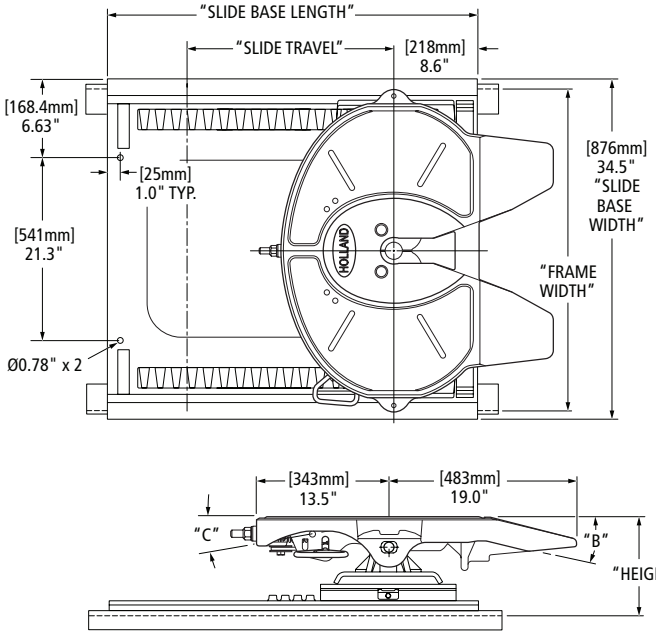

FRAME WIDTH CODE CHART					
CODE	FRAME WIDTH	CODE	FRAME WIDTH	CODE	FRAME WIDTH
A	33.25" [845]	F	33.88" [861]	M	34.62" [879]
B	33.38" [848]	G†	**34.00" [864]**	N	34.75" [883]
C	33.50" [851]	H	34.12" [867]	P	34.88" [886]
D	33.62" [854]	K	34.38" [873]	Q	35.00"
E	33.75" [857]	L	34.50" [876]		

† Standard

Frame Width "A-L": .38" x 4" x 4" angle dimensions
"M-Q": .38" x 5" x 5" angle dimensions (Option Code 21)
See option codes for other options.

STANDARD OPTION CODES Replaces the Underscore (__) on the new and legacy part number.	
NUMBER CODE	DESCRIPTION
00 / Blank	Standard, No Other Options
02	Manual Secondary Lock
21	.38" x 5" x 5" Angle
51	.38" x 4" x 6" Angle

STANDARD OPTION CODES Replaces the Underscore (__) on the new and legacy part number.	
NUMBER CODE	DESCRIPTION
80	Air Release, OEM Replacement Left-Hand Only
86	Air Release, Aftermarket Installations, Air Control Modules Included Left-Hand Only
90	Weight Saver Cutout and Air Release, OEM Replacement Left-Hand Only
1A	Manual Secondary Lock and Air Release

LEGACY FW PART NUMBER*◊	REPLACED BY ILS FW PART NUMBER◊	SLIDE BRACKET TYPE	HEIGHT IN [MM]	SLIDE TRAVEL IN [MM]	SLIDE BASE LENGTH IN [MM]	B	C	REPLACEMENT SLIDE BASE**	REPLACEMENT BRACKET**	FW WEIGHT LBS [KG]
FW31-7003G1L__	FW31B712GL00	AIR RELEASE	7.4" [188]	10.7" [272]	38.9" [988]	11°	7°	XA-0753-G1-__	XA-7003	537.00 [243.58]
FW31-7003G2L__	FW31B724GL00			16.8" [427]	45.0" [1143]			XA-0753-G2-__		561.00 [254.47]
FW31-7003G3L__	FW31B724GL00			24.5" [622]	52.6" [1336]			XA-0753-G3-__		594.00 [269.43]
FW31-7003G4L__	FW31B736GL00			41.3" [1049]	69.5" [1765]			XA-0753-G4-__		652.00 [295.74]
FW31-7003G5L__	FW31B748GL00			53.6" [1361]	82.0" [2082]			XA-0753-G5-__		733.00 [332.48]
FW31-7003G6L__	—			65.8" [1671]	94.0" [2387]			XA-0753-G6-__		808.00 [366.50]
FW31-7002G1L__	FW31B812GL00		8.4" [213]	12.2" [310]	32.8" [833]	14°	19°	XA-0753-G1-__	XA-7002	538.00 [244.03]
FW31-7002G2L__	FW31B824GL00			18.4" [467]	38.9" [988]			XA-0753-G2-__		587.00 [266.26]
FW31-7002G3L__	FW31B824GL00			24.5" [622]	45.0" [1143]			XA-0753-G3-__		609.00 [276.24]

◊ For right-hand release fifth wheels, change "L" to "R" in part number.
* No longer available if cast version exists.
** See bracket section for more information.

XL-FW10081PM-en-US Rev D 2016-03-01 Amendments and errors reserved. © SAF-HOLLAND, Inc.

LEGACY FW PART NUMBER*◊	REPLACED BY ILS FW PART NUMBER◊	SLIDE BRACKET TYPE	HEIGHT IN [MM]	SLIDE TRAVEL IN [MM]	SLIDE BASE LENGTH IN [MM]	B	C	REPLACEMENT SLIDE BASE**	REPLACEMENT BRACKET**	FW WEIGHT LBS [KG]
FW31-7002G4L__	FW31B836GL00	AIR RELEASE	8.4" [213]	36.7" [932]	57.2" [1452]	14°	19°	XA-0753-G4-__	XA-7002	684.00 [310.26]
FW31-7002G5L__	FW31B848GL00			48.9" [1242]	69.5" [1765]			XA-0753-G5-__		762.00 [345.64]
FW31-7002G6L__	—			61.2" [1554]	82.0" [2082]			XA-0753-G6-__		827.00 [375.12]
FW31-7001G1L__	FW31B912GL00		9.4" [239]	12.2" [310]	32.8" [833]	16°	19°	XA-0753-G1-__	XA-7001	534.00 [242.22]
FW31-7001G2L__	FW31B924GL00			18.4" [467]	38.9" [988]			XA-0753-G2-__		589.00 [267.17]
FW31-7001G3L__	FW31B924GL00			24.5" [622]	45.0" [1143]			XA-0753-G3-__		605.00 [274.42]
FW31-7001G4L__	FW31B936GL00			36.7" [932]	57.2" [1452]			XA-0753-G4-__		677.00 [307.08]
FW31-7001G5L__	FW31B948GL00			48.9" [1242]	69.5" [1765]			XA-0753-G5-__		758.00 [343.82]
FW31-7001G6L__	—			61.2" [1554]	82.0" [2082]			XA-0753-G6-__		823.00 [373.31]
FW31-7301G1L__	—		8.8" [224]	10.7" [272]	38.9" [988]	16°	15°	XA-0753-G1-__	XA-7301	544.00 [246.75]
FW31-7301G2L__	—			16.8" [427]	45.0" [1143]			XA-0753-G2-__		568.00 [257.64]
FW31-7301G3L__	—			24.5" [622]	52.6" [1336]			XA-0753-G3-__		601.00 [272.61]
FW31-7301G4L__	—			41.3" [1049]	69.5" [1765]			XA-0753-G4-__		659.00 [298.92]
FW31-7301G5L__	—			53.6" [1361]	82.0" [2082]			XA-0753-G5-__		740.00 [335.66]
FW31-7301G6L__	—			65.8" [1671]	94.0" [2387]			XA-0753-G6-__		815.00 [369.68]
FW31-7009G2L__	—		10.9" [277]	13.8" [351]	38.9" [988]	21°	22°	XA-0752-G2-__	XA-7009	632.00 [286.67]
FW31-7009G3L__	—			19.9" [505]	45.0" [1143]			XA-0752-G3-__		654.00 [296.65]
FW31-7009G4L__	—			32.1" [815]	57.2" [1452]			XA-0752-G4-__		726.00 [329.31]
FW31-7009G5L__	—			44.4" [1128]	69.5" [1765]			XA-0752-G5-__		807.00 [366.05]
FW31-7009G6L__	—			56.6" [1438]	82.0" [2082]			XA-0752-G6-__		872.00 [395.53]
FW31-7009G7L__	—			68.8" [1748]	94.0" [2387]			XA-0752-G7-__		954.00 [432.73]
FW31-7013G1L__	FW31B712GL00	MANUAL RELEASE	7.4" [188]	10.7" [272]	38.9" [988]	11°	7°	XA-0753-G1-__	XA-7013	534.00 [242.22]
FW31-7013G2L__	FW31B724GL00			16.8" [427]	45.0" [1143]			XA-0753-G2-__		558.00 [253.10]
FW31-7013G3L__	FW31B724GL00			24.5" [622]	52.6" [1336]			XA-0753-G3-__		591.00 [268.07]
FW31-7013G4L__	FW31B736GL00			41.3" [1049]	69.5" [1765]			XA-0753-G4-__		649.00 [294.38]
FW31-7013G5L__	FW31B748GL00			53.6" [1361]	82.0" [2082]			XA-0753-G5-__		730.00 [331.12]
FW31-7013G6L__	—			65.8" [1671]	94.0" [2387]			XA-0753-G6-__		805.00 [365.14]
FW31-7012G1L__	FW31B812GL00		8.4" [213]	12.2" [310]	32.8" [833]	14°	19°	XA-0753-G1-__	XA-7012	547.00 [248.12]
FW31-7012G2L__	FW31B824GL00			18.4" [467]	38.9" [988]			XA-0753-G2-__		596.00 [270.34]
FW31-7012G3L__	FW31B824GL00			24.5" [622]	45.0" [1143]			XA-0753-G3-__		618.00 [280.32]
FW31-7012G4L__	FW31B836GL00			36.7" [932]	57.2" [1452]			XA-0753-G4-__		690.00 [312.98]
FW31-7012G5L__	FW31B848GL00			48.9" [1242]	69.5" [1765]			XA-0753-G5-__		765.00 [347.00]
FW31-7012G6L__	—			61.2" [1554]	82.0" [2082]			XA-0753-G6-__		836.00 [379.20]
FW31-7011G1L__	FW31B912GL00		9.4" [239]	12.2" [310]	32.8" [833]	16°	19°	XA-0753-G1-__	XA-7011	553.00 [250.84]
FW31-7011G2L__	FW31B924GL00			18.4" [467]	38.9" [988]			XA-0753-G2-__		602.00 [273.06]
FW31-7011G3L__	FW31B924GL00			24.5" [622]	45.0" [1143]			XA-0753-G3-__		624.00 [283.04]
FW31-7011G4L__	FW31B936GL00			36.7" [932]	57.2" [1452]			XA-0753-G4-__		696.00 [315.70]
FW31-7011G5L__	FW31B948GL00			48.9" [1242]	69.5" [1765]			XA-0753-G5-__		771.00 [349.72]
FW31-7011G6L__	—			61.2" [1554]	82.0" [2082]			XA-0753-G6-__		842.00 [381.92]
FW31-7311G1L__	—		8.8" [224]	10.7" [272]	38.9" [988]	16°	15°	XA-0753-G1-__	XA-7311	541.00 [245.39]
FW31-7311G2L__	—			16.8" [427]	45.0" [1143]			XA-0753-G2-__		565.00 [256.28]
FW31-7311G3L__	—			24.5" [622]	52.6" [1336]			XA-0753-G3-__		598.00 [271.25]
FW31-7311G4L__	—			41.3" [1049]	69.5" [1765]			XA-0753-G4-__		656.00 [297.56]
FW31-7311G5L__	—			53.6" [1361]	82.0" [2082]			XA-0753-G5-__		737.00 [334.30]
FW31-7311G6L__	—			65.8" [1671]	94.0" [2387]			XA-0753-G6-__		812.00 [368.32]
FW31-7019G2L__	—		10.9" [277]	13.8" [351]	38.9" [988]	21°	22°	XA-0752-G2-__	XA-7019	644.00 [292.11]
FW31-7019G3L__	—			19.9" [505]	45.0" [1143]			XA-0752-G3-__		666.00 [302.09]
FW31-7019G4L__	—			32.1" [815]	57.2" [1452]			XA-0752-G4-__		738.00 [334.75]
FW31-7019G5L__	—			44.4" [1128]	69.5" [1765]			XA-0752-G5-__		813.00 [368.77]
FW31-7019G6L__	—			56.6" [1438]	82.0" [2082]			XA-0752-G6-__		884.00 [400.98]
FW31-7019G7L__	—			68.8" [1748]	94.0" [2387]			XA-0752-G7-__		968.00 [439.08]

◊ For right-hand release fifth wheels, change "L" to "R" in part number.
* No longer available if cast version exists.
** See bracket section for more information.

 Amendments and errors reserved. © SAF-HOLLAND, Inc.

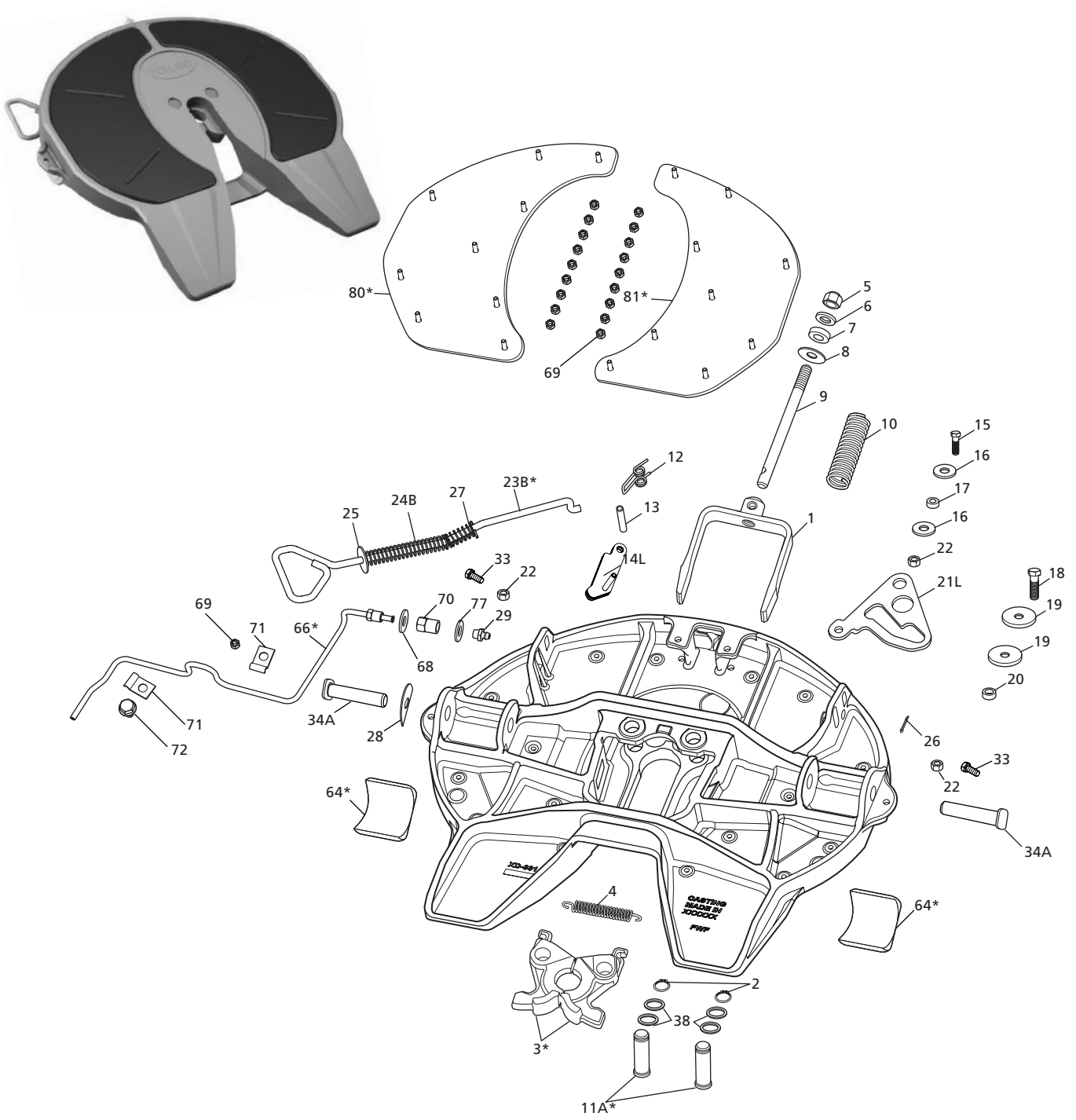

FOR RIGHT HAND RELEASE

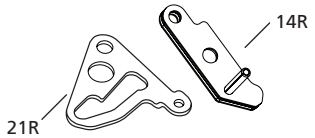

FOR AIR RELEASE MODELS

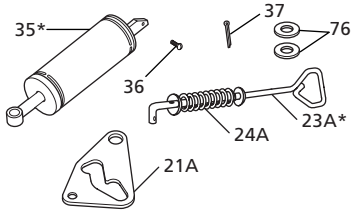

FOR MODELS EQUIPPED WITH MANUAL SECONDARY LOCK

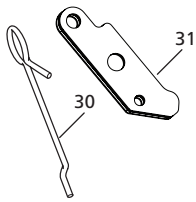

XL-FW10081PM-en-US Rev D 2016-03-01 Amendments and errors reserved. © SAF-HOLLAND, Inc.

XA-3501 PARTS LIST

ITEM	DESCRIPTION	PART NUMBER	QTY.	WEIGHT LBS [KG]
1	Yoke	XA-07295-P	1	5.82 [2.64]
2	Retaining Ring, 1" Dia.	XB-07398	2	0.01 [0.005]
3*	Lock Jaw Set, See Kits RK-351-07296 and RK-351-07296-82	XA-07296-P	1	7.76 [3.52]
4	Spring, Extension	XB-07628	1	0.08 [0.04]
5	Lock Nut, .75"-16 GR C	XB-HNH-34-F	1	0.14 [0.06]
6	Washer, .81" I.D. x 1.47" O.D.	XB-PW-1316-112-P	1	0.05 [0.02]
7	Washer, Rubber, 1.50" O.D. x .75" I.D.	XB-1127	1	0.03 [0.01]
8	Tag, Lock Adjustment	XB-02312	1	N/A
9	Yoke Shaft	XA-1706	1	1.28 [0.58]
10	Spring, Compression	XB-1505	1	0.61 [0.28]
11A*	Pin, Lock, Standard, See RK-07292-1	XA-07292-1	2	1.08 [0.49]
12	Spring, Torsion	XB-2149	1	0.06 [0.03]
13	Pin, Spring, .50" Dia. x 2.75" Long	XB-21-S-500-2750-P	1	N/A
14L	Lock, Secondary, Left-Hand	XA-11992-L	1	0.67 [0.30]
14R	Lock, Secondary, Right-Hand	XA-11992-R	1	0.67 [0.30]
15	HHCS, .50"-20 x 1.75" GR 5	XB-2083	1	0.13 [0.06]
16	Washer, .56" I.D. x 1.75" O.D.	XB-08559	2	0.06 [0.03]
17	Roller, .52" I.D. x 1" O.D. x .38" Long	XA-1029	1	0.06 [0.03]
18	HHCS, .63"-18 x 1.75" GR 8	XB-CX-58-F-134	1	0.21 [0.10]
19	Washer, .66" I.D. x 2.63" O.D.	XB-07431	2	0.24 [0.11]
20	Roller, .66 I.D. x 1" O.D. x .38" Long	XA-1507	1	0.05 [0.02]
21A	Cam Plate, Air Release	XA-1705-P	1	1.74 [0.79]
21L	Cam Plate, Left-Hand	XA-07150-L-P	1	1.93 [0.88]
21R	Cam Plate, Right Hand	XA-07150-R-P	1	1.93 [0.88]
22	Lock Nut, .50"-20 GR C	XB-T-69-A	3	0.04 [0.02]
23A*	Release Handle, Air Release, See RK-07766-1	XA-07766-1	1	1.90 [0.86]
23B*	Release Handle, Left- and Right-Hand, See RK-07151-1	XA-07151-1	1	2.05 [0.93]
24A	Spring, Air Release	XB-07974	1	0.16 [0.07]
24B	Spring, Manual Release	XB-07291	1	0.20 [0.09]
25	Washer, .53" I.D. x 1.06" O.D.	XB-PW-016-17	1	0.02 [0.01]
26	Pin, Cotter, .13" x 1.25" Long	XB-07508	1	0.02 [0.01]
27	Washer, .56" I.D. x 1.38" O.D.	XB-T-49	2	0.04 [0.02]
28	Tag, Operation (Service Part Only)	XB-07610	1	0.01 [0.01]
29	Grease Zerk	XB-H-38	1	0.01 [0.00]
30	Lock, Manual Secondary, Release Handle	XA-3542-M	1	0.25 [0.11]
31	Lock, Manual Secondary	XA-11992	1	0.61 [0.28]
33	HHCS, .50"-20 x 1.25" GR 5	XB-C-95	2	0.11 [0.05]
34A	Pin, Bracket	XE-06356-P	2	1.98 [0.90]
35*	Air Release, Cylinder Assembly, See RK-2524-R-16-L	XA-2524-R-16-L	1	4.70 [2.13]
36	Screw, Drive, #12 x .75" Long	XB-09155	1	0.01 [0.005]
37	Pin, Cotter, .19" x 1.25" Long	XB-06336	1	0.01 [0.005]
38	Washer, 1.19" I.D. x 1.58" O.D.	XB-05859-1	4	0.01 [0.005]

XA-3501 PARTS LIST

ITEM	DESCRIPTION	PART NUMBER	QTY.	WEIGHT LBS [KG]
64*	Pocket Insert, See RK-PKT-2	XD-08908	2	1.72 [0.78]
66*	Lube Tube Assembly, See RK-09559	XA-09181	1	0.08 [0.04]
68	Washer, .38" I.D. x .88" O.D.	XB-05635	1	0.01 [0.005]
69	Lock Nut, .31"-18 GR B	XB-08931	19	0.01 [0.005]
70	Fitting, Connector, Female	XB-09183	1	0.02 [0.01]
71	Clip, Tube	XB-09184-1	2	0.01 [0.005]
72	Screw, Thread Cutting, .31"-18 x .50" Long	XB-09185	1	0.03 [0.01]
77	Washer, .41" I.D. x .81" O.D.	XB-PWM-38-78	1	0.01 [0.005]
80*	Lube Plate, Left-Hand, See RK-331-1 or RK-331-3	XA-08125-L	1	4.80 [2.18]
81*	Lube Plate, Right-Hand, See RK-331-1 or RK-331-3	XA-08125-R	1	4.80 [2.18]

*Not sold individually - must be purchased in kit.

REPLACEMENT TOP PLATE PART NUMBERS

PART NUMBER	DESCRIPTION
XA-331-A-P	Right-Hand Release with Pins
XA-331-A-L-P	Left-Hand Release with Pins
XA-331-A-86-L-P	Air Release with Pins and Air Controls
XA-331-A-02-P	Manual Secondary Lock Right-Hand Release with Pins
XA-331-A-02-L-P	Manual Secondary Lock Left-Hand Release with Pins
XA-331-A-82-P	Right-Hand Release, Drilled Tapped with Cross-drilled Hole
XA-331-A-82-L-P	Left-Hand Release, Drilled Tapped with Cross-drilled Hole
XA-331-A-L-ELP	Left-Hand Release with ELI and Pins

NOTE: See Accessories Section for Air Release, Electronic Lock Indicator Kits.

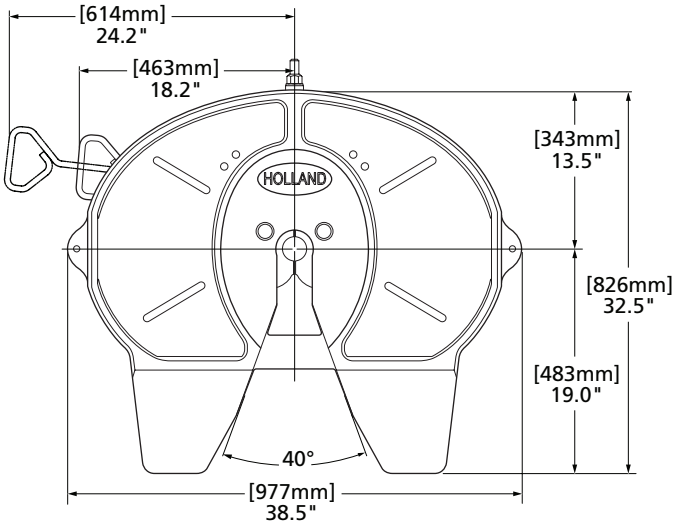

For XA-331 fifth wheel rebuild procedures, see Holland publication XL-FW290 at www.safholland.us

FW33

 Amendments and errors reserved. © SAF-HOLLAND, Inc.

RK-351-07295
Lock Yoke

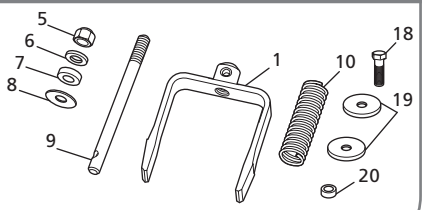

RK-351-02312
Lock Adjustment Tag

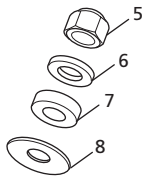

RK-351-1507
Roller Bolt Hardware

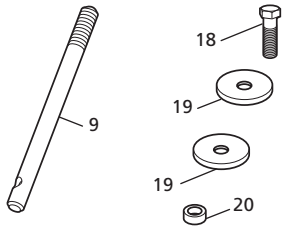

RK-351-2083
Cam Plate Pivot Bolt Hardware

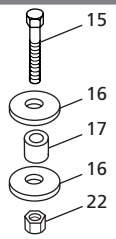

RK-351-07296
Standard Lock

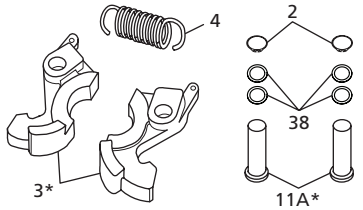

RK-07292-1
Lock Pins

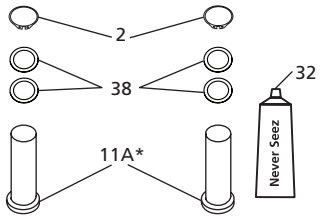

RK-09559
Lube Tube

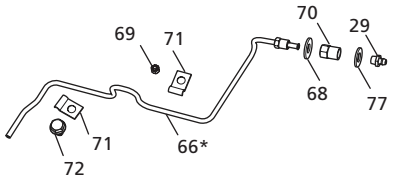

RK-2524-R16-L
Air Cylinder

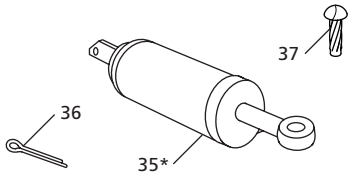

FW33 KIT PARTS LIST

ITEM	DESCRIPTION	PART NUMBER	QTY.	WEIGHT LBS [KG]
1	Yoke	XA-07295-P	1	5.82 [2.64]
2	Retaining Ring, 1" Dia.	XB-07398	2	0.01 [0.005]
3*	Lock Jaw Set	XA-07296-P	1	7.76 [3.52]
4	Spring, Extension	XB-07628	1	0.08 [0.04]
5	Lock Nut, .75"-16 Gr C	XB-HNH-34-F	1	0.14 [0.06]
6	Washer, .81" I.D. x 1.47" O.D.	XB-PW-1316-112	1	0.04 [0.02]
7	Washer, Rubber, .75" I.D. x 1.50'' O.D.	XB-1127	1	0.03 [0.01]
8	Tag, Lock Adjustment	XB-02312	1	N/A
9	Shaft, Yoke	XA-1706	1	1.28 [0.58]
10	Spring, Compression	XB-1505	1	0.61 [0.28]
11A*	Pin, Lock	XA-07292-1	2	1.08 [0.49]
15	HHCS, .50"-20 x 1.75" Gr 5	XB-2083	1	0.13 [0.06]
16	Washer, .56" I.D. x 1.75" O.D.	XB-08559	2	0.06 [0.03]
17	Roller, .52" I.D. x 1" O.D. x .38" Long	XA-1029	1	0.06 [0.03]
18	HHCS, .63"-18 x 1.75" Gr 8	XB-CX-58-F-134	1	0.21 [0.10]
19	Washer, .66" I.D. x 2.63" O.D."	XB-07431	2	0.24 [0.11]

FW33 KIT PARTS LIST

ITEM	DESCRIPTION	PART NUMBER	QTY.	WEIGHT LBS [KG]
20	Roller, .66" I.D. x 1" O.D.r x .38" Long	XA-1507	1	0.05 [0.02]
22	Lock Nut, .50"-20 Gr C	XB-T-69-A	1	0.04 [0.02]
29	Fittings, Grease	XB-H-38	1	0.01 [0.005]
32	Never-Seez, 7.5g Tube	XB-02967	1	N/A
35*	Cylinder Assembly, Air	XA-2524-R-16-L	1	4.70 [2.13]
36	Pin, Cotter, .19" Dia. x 1.25" Long	XB-06336	1	0.01 [0.005]
37	Drive Screw, #12 x .75" Long	XB-09155	1	0.01 [0.005]
38	Washer, 1.19" I.D. x 1.58" O.D.	XB-05859-1	4	0.01 [0.005]
66*	Lube Tube Assembly	XA-09181	1	0.08 [0.04]
68	Washer, .38" I.D. x .88" O.D.	XB-05635	1	0.01 [0.005]
69	Lock Nut, .31"-18 Gr B	XB-08931	1	0.01 [0.005]
70	Fitting, Female Connector	XB-09183	1	0.02 [0.01]
71	Clip, Tube	XB-09184-1	2	0.01 [0.00]
72	Screw, Thread Cutting, .31"-18 x .50" Long	XB-09185	1	0.03 [0.01]
77	Washer, .41" I.D. x .81" O.D.	XB-PWM-38-78	1	0.01 [0.005]

*Not sold individually - must be purchased in kit.

XL-FW10081PM-en-US Rev D 2016-03-01 Amendments and errors reserved. © SAF-HOLLAND, Inc.

RK-06973-1
Bracket Pins and Cushions

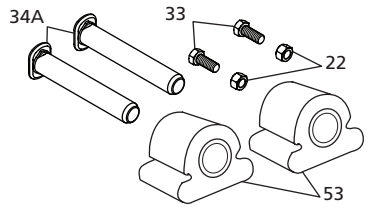

RK-PKT-2
Pocket Inserts

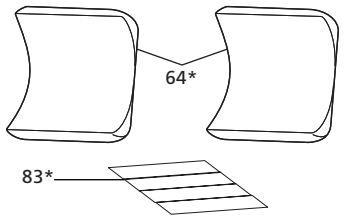

RK-10605
Bracket Pins and Bushings for ILS

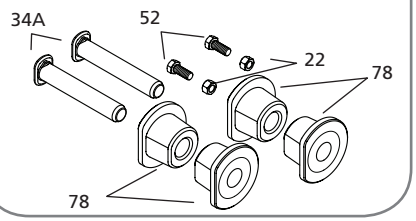

RK-07766-1
Air Release Handle

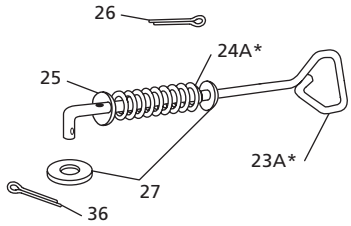

RK-07151-1
Right & Left Hand Release

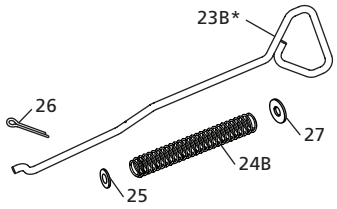

RK-331-1
Lube Plate

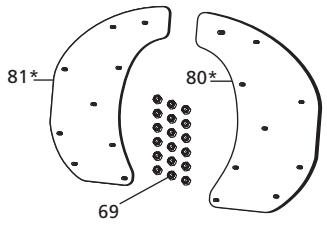

RK-331-3
Lube Plate and Pocket Inserts

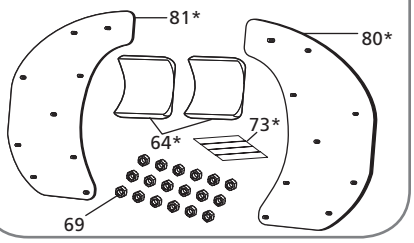

FW33 KIT PARTS LIST

ITEM	DESCRIPTION	PART NUMBER	QTY.	WEIGHT LBS [KG]
22	Lock Nut, .50"-20 Gr C	XB-T-69-A	2	0.04 [0.02]
23A*	Release Handle, Air Release	XA-07766-1	1	1.90 [0.86]
23B*	Release Handle, Left and Right-Hand	XA-07151-1	1	2.05 [0.93]
24A	Spring, Air Release	XB-07974	1	0.16 [0.07]
24B	Spring, Manual Release	XB-07291	1	0.20 [0.09]
25	Washer, .53" I.D. x 1.06" O.D.	XB-PW-016-17	1	0.02 [0.01]
26	Pin, Cotter, .13" Dia. x 1.25" Long	XB-07508	1	0.02 [0.01]
27	Washer, .56" I.D. x 1.38" O.D., Manual Release	XB-T-49	1	0.04 [0.02]
	Washer, .56" I.D. x 1.38" O.D., Air Release		2	0.04 [0.02]
34A	Pin, Bracket	XE-06356-P	2	1.98 [0.90]
36	Pin, Cotter, .19" Dia. x 1.25" Long	XB-06336	1	0.01 [0.005]
52	HHCS, .50" -20 x 1.25" Gr 5	XB-C-95	2	0.11 [0.05]
53	Cushion, Rubber	XB-0011-2	2	0.60 [0.27]
64*	Pocket Insert, See RK-PKT-2	XD-08908	2	1.72 [0.78]

FW33 KIT PARTS LIST

ITEM	DESCRIPTION	PART NUMBER	QTY.	WEIGHT LBS [KG]
69	Lock Nut, .31"-18 Gr B	XB-08931	18	0.01 [0.005]
78	Cushion,Rubber, ILS	XB-10605	2	0.39 [0.18]
80*	Lube Plate, Left-Hand	XA-08125-L	1	4.80 [2.18]
81*	Lube Plate, Right-Hand	XA-08125-R	1	4.80 [2.18]
83*	Tape, Double Back	XB-09422	4	0.01 [0.005]

*Not sold individually - must be purchased in kit.

 Amendments and errors reserved. © SAF-HOLLAND, Inc.

RK-09649 (Stainless Steel Air Cylinder)
RK-09649-1 (Aluminum Air Cylinder)
Air Release, Retrofit

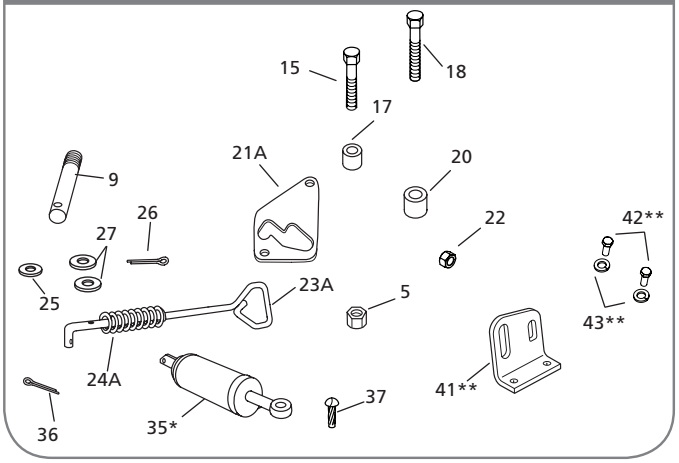

RK-07814
Air Release

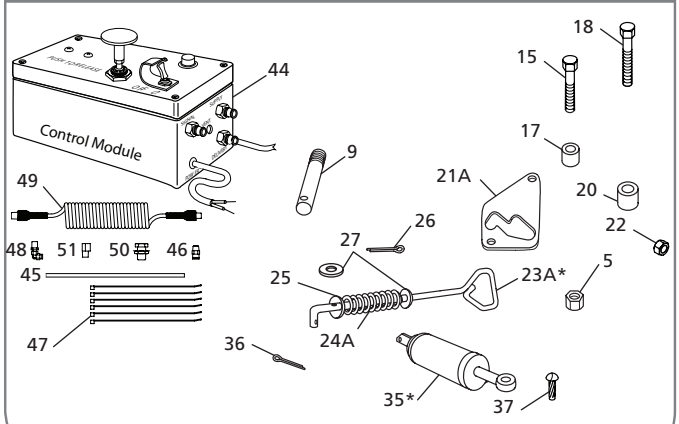

FW33 KIT PARTS LIST

ITEM	DESCRIPTION	PART NUMBER	QTY.	WEIGHT LBS [KG]
5	Lock Nut, .75"-16 GR C	XB-HNH-34-F	1	0.14 [0.06]
9	Yoke Shaft	XA-1706	1	1.28 [0.58]
15	HHCS, .50"-20 x 1.75" GR 5	XB-2083	1	0.13 [0.06]
17	Roller, .52" I.D. x 1" O.D. x .38" Long	XA-1029	1	0.06 [0.03]
18	HHCS, .63"-18 x 1.75" GR 8	XB-CX-58-F-134	1	0.21 [0.10]
20	Roller, .66" I.D. x 1" O.D. x .38" Long	XA-1507	1	0.05 [0.02]
21A	Cam Plate, Air Release	XA-1705-P	1	1.74 [0.79]
22	Lock Nut, .50"-20 GR C	XB-T-69-A	1	0.04 [0.02]
23A*	Release Handle, Air Release, See RK-07766-1	XA-07766-1	1	1.90 [0.86]
24A	Spring, Air Release	XB-07974	1	0.16 [0.07]
25	Washer, .53" I.D. x 1.06" O.D.	XB-PW-016-17	1	0.02 [0.01]
26	Pin, Cotter, .13" x 1.25" Long	XB-07508	1	0.02 [0.01]
27	Washer, .56" I.D. x 1.38" O.D.	XB-T-49	2	0.04 [0.02]
35*	Air Release Cylinder Assembly, See RK-2524-R-16-L	XA-2524-R-16-L	1	4.70 [2.13]

FW33 KIT PARTS LIST

ITEM	DESCRIPTION	PART NUMBER	QTY.	WEIGHT LBS [KG]
36	Pin, Cotter, .19" x 1.25 Long	XB-06336	1	0.01 [0.005]
37	Screw, Drive, #12 x .75" Long	XB-09155	1	0.01 [0.005]
41**	Handle Bracket, Air Release and Right-Hand Release for H- Version Casting	XA-11211	1	1.25 [0.57]
42**	HHCS, .38" - 16 x 1" GR 5	XB-C-38-C-1	2	0.04 [0.02]
43**	Washer, Lock, .38 I.D. x .68" O.D.	XB-T-61	2	0.01 [0.005]
44	Control Module, Air Release	XA-06354	1	2.80 [1.27]
45	Nylon, .25" O.D., Tubing 35' Long	XA-06565-35	1	0.56 [0.25]
46	Pipe Fitting, Male	XB-11251	1	0.03 [0.01]
47	Cable Ties, Nylon, RK-09646 and RK-06535	XB-01961	5	N/A
48	Elbow, 90° Street, RK-06535	XB-01996	1	0.09 [0.04]
49	Air Hose Assembly	XB-06583	1	N/A
50	Bulkhead Fitting, .25" NPT Female	XB-01959	1	0.18 [0.08]
51	Elbow, Swivel, Male 90°	XB-06570	1	N/A

*Not sold individually - must be purchased in kit.
** Only needed for FW35 (XA-351-H) version casting only needed

XL-FW10081PM-en-US Rev D 2016-03-01 Amendments and errors reserved. © SAF-HOLLAND, Inc.

RK-351-A
Complete Rebuild, Right-Hand Release

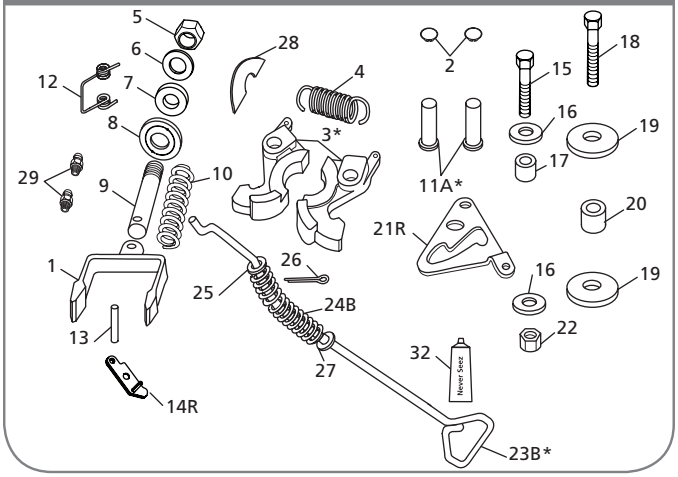

RK-351-A-L
Complete Rebuild, Left-Hand Release

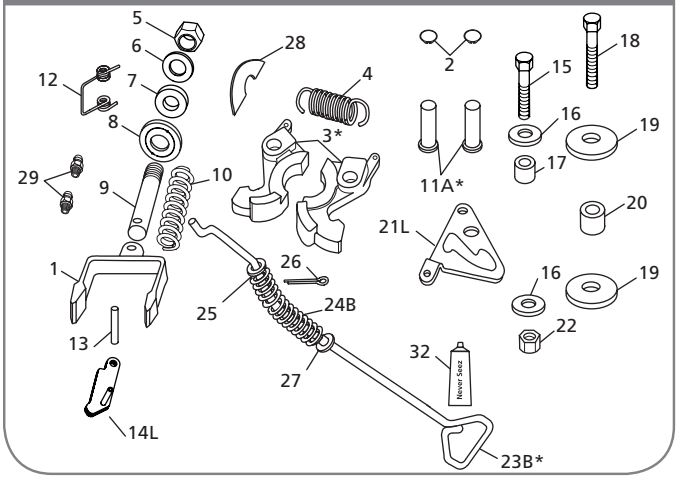

FW33 KIT PARTS LIST

ITEM	DESCRIPTION	PART NUMBER	QTY.	WEIGHT LBS [KG]
1	Yoke	XA-07295-P	1	5.82 [2.64]
2	Retaining Ring, 1" Dia.	XB-07398	2	0.01 [0.005]
3*	Lock Jaw Set, See RK-351-07296 and RK-351-07296-82	XA-07296-P	1	7.76 [3.52]
4	Spring, Extension	XB-07628	1	0.08 [0.04]
5	Lock Nut, .75"-16 GR C	XB-HNH-34-F	1	0.14 [0.06]
6	Washer, .81" I.D. x 1.47" O.D.	XB-PW-1316-112-P	1	0.05 [0.02]
7	Washer, Rubber, 1.50" O.D. x .75" I.D.	XB-1127	1	0.03 [0.01]
8	Tag, Lock Adjustment	XB-02312	1	0.01 [0.00]
9	Yoke Shaft	XA-1706	1	1.28 [0.58]
10	Spring, Compression	XB-1505	1	0.61 [0.28]
11A*	Pin, Lock, Standard, See RK-07292-1	XA-07292-1	2	1.08 [0.49]
12	Spring, Torsion	XB-2149	1	0.06 [0.03]
13	Pin, Spring, .50" Dia. x 2.75" Long	XB-21-S-500-2750-P	1	N/A
14L	Lock, Secondary, Left-Hand	XA-11992-L	1	0.67 [0.30]
14R	Lock, Secondary, Right-Hand	XA-11992-R	1	0.67 [0.30]
15	HHCS, .50"-20 x 1.75" GR 5	XB-2083	1	0.13 [0.06]
16	Washer, .56" I.D. x 1.75" O.D.	XB-08559	2	0.06 [0.03]

FW33 KIT PARTS LIST

ITEM	DESCRIPTION	PART NUMBER	QTY.	WEIGHT LBS [KG]
17	Roller, .52" I.D. x 1" O.D. x .38" Long	XA-1029	1	0.06 [0.03]
18	HHCS, .63"-18 x 1.75" GR 8	XB-CX-58-F-134	1	0.21 [0.10]
19	Washer, .66" I.D. x 2.63" O.D.	XB-07431	2	0.24 [0.11]
20	Roller, .66" I.D. x 1" O.D. x .38" Long	XA-1507	1	0.05 [0.02]
21L	Cam Plate, Left-Hand	XA-07150-L-P	1	1.93 [0.88]
21R	Cam Plate, Right-Hand	XA-07150-R-P	1	1.93 [0.88]
22	Lock Nut, .50"-20 GR C	XB-T-69-A	1	0.04 [0.02]
23B*	Release Handle, Left- and Right-Hand, See RK-07151-1	XA-07151-1	1	2.05 [0.93]
24B	Spring, Manual Release	XB-07291	1	0.20 [0.09]
25	Washer, .53" I.D. x 1.06" O.D.	XB-PW-016-17	1	0.02 [0.01]
26	Pin, Cotter, .13" x 1.25" Long	XB-07508	1	0.02 [0.01]
27	Washer, .56" I.D. x 1.38" O.D.	XB-T-49	1	0.04 [0.02]
28	Tag, Operation (Service Part Only)	XB-07610	1	N/A
29	Grease Zerk	XB-H-38	2	0.01 [0.005]
32	Never-Seez, 7.5g Tube	XB-02967	1	N/A

*Not sold individually - must be purchased in kit.

 Amendments and errors reserved. © SAF-HOLLAND, Inc.

RK-351-A-02
Complete Rebuild, Secondary Lock, Right-Hand Release

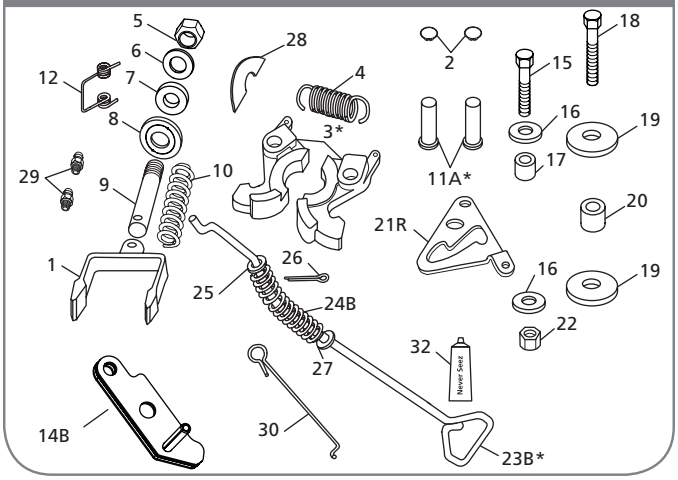

RK-351-A-02-L
Complete Rebuild, Secondary Lock, Left-Hand Release

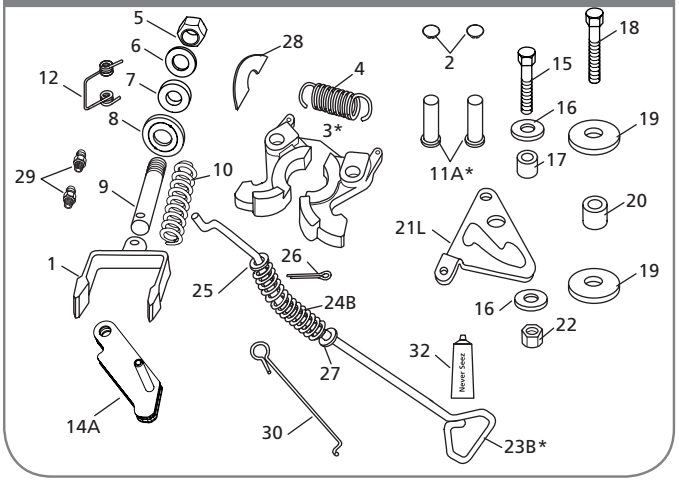

FW33 KIT PARTS LIST

ITEM	DESCRIPTION	PART NUMBER	QTY.	WEIGHT LBS [KG]
1	Yoke	XA-07295-P	1	5.82 [2.64]
2	Retaining Ring, 1" Dia.	XB-07398	2	0.01 [0.005]
3*	Lock Jaw Set, See RK-351-07296 and RK-351-07296-82	XA-07296-P	1	7.76 [3.52]
4	Spring, Extension	XB-07628	1	0.08 [0.04]
5	Lock Nut, .75"-16 GR C	XB-HNH-34-F	1	0.14 [0.06]
6	Washer, .81" I.D. x 1.47" O.D.	XB-PW-1316-112-P	1	0.05 [0.02]
7	Washer, Rubber, 1.50" O.D. x .75" I.D.	XB-1127	1	0.03 [0.01]
8	Tag, Lock Adjustment	XB-02312	1	N/A
9	Yoke Shaft	XA-1706	1	1.28 [0.58]
10	Spring, Compression	XB-1505	1	0.61 [0.28]
11A*	Pin, Lock, Standard, See RK-07292-1	XA-07292-1	2	1.08 [0.49]
12	Spring, Torsion	XB-2149	1	0.06 [0.03]
14A	Lock, S/A Secondary	XA-11992-L	1	0.67 [0.30]
14B	Lock, S/A Secondary	XA-11992-R	1	0.67 [0.30]
15	HHCS, .50"-20 x 1.75" GR 5	XB-2083	1	0.13 [0.06]
16	Washer, .56" I.D. x 1.75" O.D.	XB-08559	2	0.06 [0.03]
17	Roller, .52" I.D. x 1" O.D. x .38" Long	XA-1029	1	0.06 [0.03]
18	HHCS, .63"-18 x 1.75" GR 8	XB-CX-58-F-134	1	0.21 [0.10]
19	Washer, .66" I.D. x 2.63" O.D.	XB-07431	2	0.24 [0.11]
20	Roller, .66" I.D. x 1" O.D. x .38" Long	XA-1507	1	0.05 [0.02]
21L	Cam Plate, Left-Hand	XA-07150-L-P	1	1.93 [0.88]
21R	Cam Plate, Right-Hand	XA-07150-R-P	1	1.93 [0.88]
22	Lock Nut, .50"-20 GR C	XB-T-69-A	2	0.04 [0.02]
23B*	Release Handle, Left- and Right-Hand, See RK-07151-1	XA-07151-1	1	2.05 [0.93]
24B	Spring, Manual Release	XB-07291	1	0.20 [0.09]

FW33 KIT PARTS LIST

ITEM	DESCRIPTION	PART NUMBER	QTY.	WEIGHT LBS [KG]
25	Washer, .53" I.D. x 1.06" O.D.	XB-PW-016-17	1	0.02 [0.01]
26	Pin, Cotter, .13" x 1.25" Long	XB-07508	1	0.02 [0.01]
27	Washer, .56" I.D. x 1.38" O.D.	XB-T-49	1	0.04 [0.02]
28	Tag, Operation (Service Part Only)	XB-07610	1	N/A
29	Grease Zerk	XB-H-38	2	0.01 [0.005]
30	Release Handle, Manual Secondary Lock	XA-3542-M-P	1	0.25 [0.11]
32	Never-Seez, 7.5g Tube	XB-02967	1	N/A

*Not sold individually - must be purchased in kit.

XL-FW10081PM-en-US Rev D 2016-03-01 Amendments and errors reserved. © SAF-HOLLAND, Inc.

RK-351-A-80-L
Complete Rebuild, Air Release

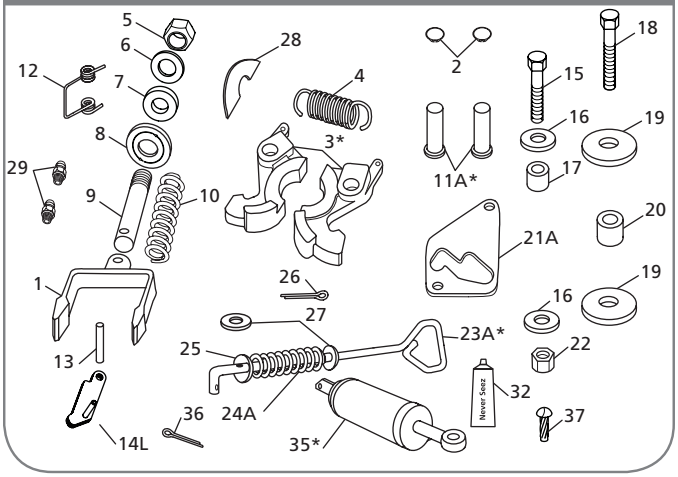

FW33 KIT PARTS LIST

ITEM	DESCRIPTION	PART NUMBER	QTY.	WEIGHT LBS [KG]
1	Yoke	XA-07295-P	1	5.82 [2.64]
2	Retaining Ring, 1" Dia.	XB-07398	2	0.01 [0.005]
3*	Lock Jaw Set, See RK-351-07296 and RK-351-07296-82	XA-07296-P	1	7.76 [3.52]
4	Spring, Extension	XB-07628	1	0.08 [0.04]
5	Lock Nut, .75"-16 GR C	XB-HNH-34-F	1	0.14 [0.06]
6	Washer, .81" I.D. x 1.47" O.D.	XB-PW-1316-112-P	1	0.05 [0.02]
7	Washer, Rubber, 1.50" O.D. x .75" I.D.	XB-1127	1	0.03 [0.01]
8	Tag, Lock Adjustment	XB-02312	1	N/A
9	Yoke Shaft	XA-1706	1	1.28 [0.58]
10	Spring, Compression	XB-1505	1	0.61 [0.28]
11A*	Pin, Lock, Standard, See RK-07292-1	XA-07292-1	2	1.08 [0.49]
12	Spring, Torsion	XB-2149	1	0.06 [0.03]
13	Pin, Spring, .50" Dia. x 2.75" Long	XB-21-S-500-2750-P	1	N/A
14L	Lock, Secondary, Left-Hand	XA-11992-L	1	0.67 [0.30]
15	HHCS, .50"-20 x 1.75" GR 5	XB-2083	1	0.13 [0.06]
17	Roller, .52" I.D. x 1" O.D. x .38" Long	XA-1029	1	0.06 [0.03]
18	HHCS, .63"-18 x 1.75" GR 8	XB-CX-58-F-134	1	0.21 [0.10]
19	Washer, .66" I.D. x 2.63" O.D.	XB-07431	2	0.24 [0.11]
20	Roller, .66" I.D. x 1" O.D. x .38" Long	XA-1507	1	0.05 [0.02]
21A	Cam Plate, Air Release	XA-1705-P	1	1.74 [0.79]
22	Lock Nut, .50"-20 GR C	XB-T-69-A	1	0.04 [0.02]
23A*	Release Handle, Air Release, See RK-07766-1	XA-07766-1	1	1.90 [0.86]
24A	Spring, Air Release	XB-07974	1	0.16 [0.07]
25	Washer, .53" I.D. x 1.06" O.D.	XB-PW-016-17	1	0.16 [0.07]
26	Pin, Cotter, .13" x 1.25" Long	XB-07508	1	0.02 [0.01]
27	Washer, .56" I.D. x 1.38" O.D.	XB-T-49	4	0.04 [0.02]
28	Tag, Operation (Service Part Only)	XB-07610	1	N/A

FW33 KIT PARTS LIST

ITEM	DESCRIPTION	PART NUMBER	QTY.	WEIGHT LBS [KG]
29	Grease Zerk	XB-H-38	2	0.01 [0.005]
32	Never-Seez, 7.5g Tube	XB-02967	1	0.02 [0.01]
35*	Air Release Cylinder Assembly, See RK-2524-R-16-L	XA-2524-R-16-L	1	4.70 [2.13]
36	Pin, Cotter, .19" x 1.25" Long	XB-06336	1	0.01 [0.005]
37	Screw, Drive, #12 x .75" Long	XB-09155	1	0.01 [0.005]

*Not sold individually - must be purchased in kit.

 Amendments and errors reserved. © SAF-HOLLAND, Inc.

SAF-HOLLAND Group

ILS Style Fifth Wheel Assembly Part Numbers

General Holland prefix indicating complete fifth wheel assembly

SERIES	
33	FW33 Series

MOUNTING STYLE	
NO.	DESCRIPTION
Standard Duty Sliders	
A	Outboard (1 pc tie-bar)
B	Inboard (Serrated 3 pc tie-bar)
C	Inboard (Straight 3 pc tie-bar) (DTNA Air Fitting)
F	Outboard (1 pc tie-bar)
H	Inboard (1 pc tie-bar for PACCAR)
J	Outboard (1 pc tie-bar for PACCAR)
Standard Duty Stationaries	
Z	Integrated Plate Mount
Y	Foot Mount
X	Bracket Castings Only (No Angle or Base Plate)
W	Brackets w/4" Vert. Leg Angle
Specialty Mounting Systems	
K	Kompensator
N	No-Tilt

HEIGHT (approx.)	
NO.	DESCRIPTION
6	6" (Stationary only)
7	7"
8	8"
9	9"
0	10"
1	11" (Komp only)
2	12.0" [305] (Komp only)
3	13" (Komp only)

FW 33 X X XX X X XX

TRAVEL	
NO.	DESCRIPTION
00	Stationary
ILS Travel	
12	12"
18	18" (Only H & J) Mounting Style
24	24"
36	36"
48	48"
No-Tilt ILS Travel	
06	6"
18	18"
30	30"
42	42"
Kompensator Travel	
11	11"
17	17"
24	24"
41	41"
54	54"
66	66"

ANGLES	
NO.	DESCRIPTION
No Angle Mounting Systems	
W	Aftermarket Inboard No-Tilt & Komp (Serrated Edge)
X	Outboard Slider ***or*** Inboard Slider w/o Angles ***or*** Stationary w/o Angles
Y	Outboard No-Tilt & Komp
Z	OEM Inboard No-Tilt & Komp (straight edge)
Frame Width for Standard Duty Mounting Angles	
A	33.25"
B	33.38"
C	33.50"
D	33.62"
E	33.75
F	33.88"
G	34.00"
H	34.12"
J	34.25"
K	34.38"
L	34.50"

RELEASE HANDLE	
NO.	DESCRIPTION
L	Left-hand (Road-side)
R	Right-hand (Curb-side)

OPTION CODE*	
NO.	DESCRIPTION
00	No option
02	Manual Secondary Lock
24	Drilled & Tapped for Auto Lube
28	Dolly Release Handle
80	Air Release Top Plate
EL	Electronic Lock Indicator (ELI)
EA	ELI w/ Air Release Top Plate
8E	ELI w/Air Release Top Plate (PACCAR only)

NOTE: There are no "dashes" used for the complete fifthwheel assembly new part number

* Please note that not all options are are available on every top plate. Multiple option combinations are available.

XL-FW10081PM-en-US Rev D 2016-03-01 Amendments and errors reserved. © SAF-HOLLAND, Inc.

Traditional Style Stationary Fifth Wheel Assembly Part Numbers

General Holland prefix indicating complete fifth wheel assembly

SERIES	
33	FW33 Series

FRAME WIDTH			
LETTER	WIDTH	LETTER	WIDTH
X	No Angle	F	34.26"
A	33.63"	G	34.38"
B	33.76"	H	34.50"
C	33.88"	J	34.63"
D	34.00"	K	34.76"
E	34.13"	L	34.88"

RELEASE HANDLE	
NO.	DESCRIPTION
L	Left-hand (Road-side)
R	Right-hand (Curb-side)

FW 33 XXXX X X X XX

MOUNTING STYLE			
NO.	HEIGHT	NO.	HEIGHT
Foot Mount		*Bracket with Angle*	
7801	8.7"	7811	8.7"
7802	7.7"	7812	7.7"
7803	6.7"	7813	6.7"
7804	5.7"	7814	5.7"
Integrated Plate		*Bracket for Angle*	
7883	8.6"	7821	8.3"
8774	7.6"	7822	7.3"
7885	6.6"	7823	6.3"
7886	5.6"	7824	5.3"

SLIDE TRAVEL	
NO.	DESCRIPTION
1	12.2"
2	18.4"
3	24.5"
4	36.7"
5	48.9"

OPTION CODE*	
NO.	DESCRIPTION
BLANK	No option
02	Manual Secondary Lock
24	Drilled & Tapped for Auto Lube
Other Options Available	

Traditional Style Sliding Fifth Wheel Assembly Part Numbers

General Holland prefix indicating complete fifth wheel assembly

SERIES	
33	FW33 Series

FRAME WIDTH			
LETTER	WIDTH	LETTER	WIDTH
X	No Angle	G	34.38"
A	33.63"	H	34.50"
B	33.76"	J	34.63"
C	33.88"	K	34.76"
D	34.00"	L	34.88"
E	34.13"	*Outboard*	
F	34.26"	T	Angles not Included

RELEASE HANDLE	
NO.	DESCRIPTION
L	Left-hand (Road-side)
R	Right-hand (Curb-side)

FW 33 XXXX X X X XX

MOUNTING STYLE			
NO.	HEIGHT	NO.	HEIGHT
Over the Frame		*Outboard*	
7001	8.63"	8001	8.63"
7002	7.63"	8002	7.63"
7003	6.63"	8003	6.63"

SLIDE TRAVEL	
NO.	DESCRIPTION
1	12.2"
2	18.4"
3	24.5"
4	36.7"
5	48.9"

OPTION CODE*	
NO.	DESCRIPTION
BLANK	No option
02	Manual Secondary Lock
24	Drilled & Tapped for Auto Lube
Other Options Available	

 Amendments and errors reserved. © SAF-HOLLAND, Inc.

FW33 Stationary Foot Mount



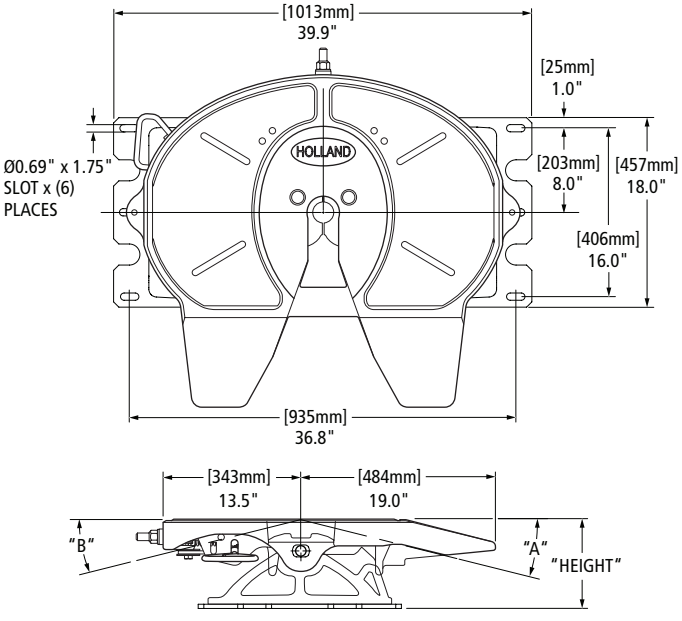

STANDARD OPTION CODES Replaces the Underscore (__) on the new and legacy part number.			
CODE	DESCRIPTION	CODE	DESCRIPTION
00 / Blank	Standard, No Other Options.	86	Air Release, Aftermarket Installations, Left-Hand Only
02	Manual Secondary Lock	EL	Electronic Lock Indicator
80	Air Release, OEM Replacement, Left-Hand Only		

FW PART NUMBER (CAST BRACKET)◊	LEGACY FW PART NUMBER (FABRICATED BRACKET)*◊	HEIGHT	A	B	REPLACEMENT BRACKETS**	FW WEIGHT LBS [KG]
FW33Y600XL__	FW33-7804XL__	6.0" [152]	8°	8°	RK-Y600	321.00 [145.60]
FW33Y700XL__	FW33-7803XL__	7.0" [178]	11°	11°	RK-Y700	327.00 [148.32]
FW33Y800XL__	FW33-7802XL__	8.0" [203]	14°	14°	RK-Y800	332.00 [150.59]
FW33Y900XL__	FW33-7801XL__	9.0"	17°	17°	RK-Y900	337.00 [152.86]

◊ For right-hand release fifth wheels, change "L" to "R" in part number.
*No Longer Available.
** See bracket section for more information.

NOTE: A flat or corrugated mounting plate is required for foot mount brackets.

FW33 Stationary Integrated Plate Mount



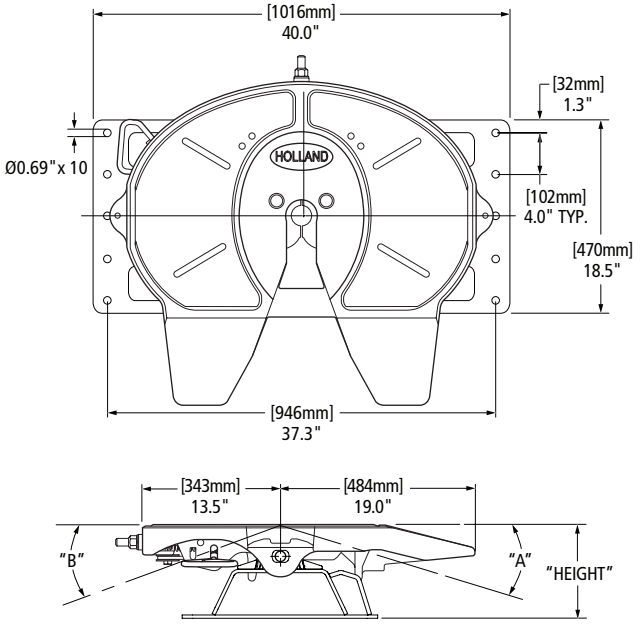

STANDARD OPTION CODES Replaces the Underscore (__) on the new and legacy part number.			
CODE	DESCRIPTION	CODE	DESCRIPTION
00 / Blank	Standard, No Other Options.	86	Air Release, Aftermarket Installations, Left-Hand Only
02	Manual Secondary Lock	EL	Electronic Lock Indicator
80	Air Release, OEM Replacement, Left-Hand Only		

FW PART NUMBER (CAST BRACKET)◊	LEGACY FW PART NUMBER (FABRICATED BRACKET)*◊	HEIGHT	A	B	REPLACEMENT BRACKETS**	FW WEIGHT LBS [KG]
FW33Z600XL__	FW33-7886XL__	6.0" [152]	8°	8°	RK-Z600	337.00 [152.86]
FW33Z700XL__	FW33-7885XL__	7.0" [178]	11°	11°	RK-Z700	346.00 [156.94]
FW33Z800XL__	FW33-7884XL__	8.0" [203]	14°	14°	RK-Z800	352.00 [159.66]
FW33Z900XL__	FW33-7883XL__	9.0"	17°	17°	RK-Z900	349.00 [158.30]

◊ For right-hand release fifth wheels, change "L" to "R" in part number.
* No Longer Available
** See bracket section for more information.

XL-FW10081PM-en-US Rev D 2016-03-01 Amendments and errors reserved. © SAF-HOLLAND, Inc.

FW33 Stationary Brackets for Angle Mounting



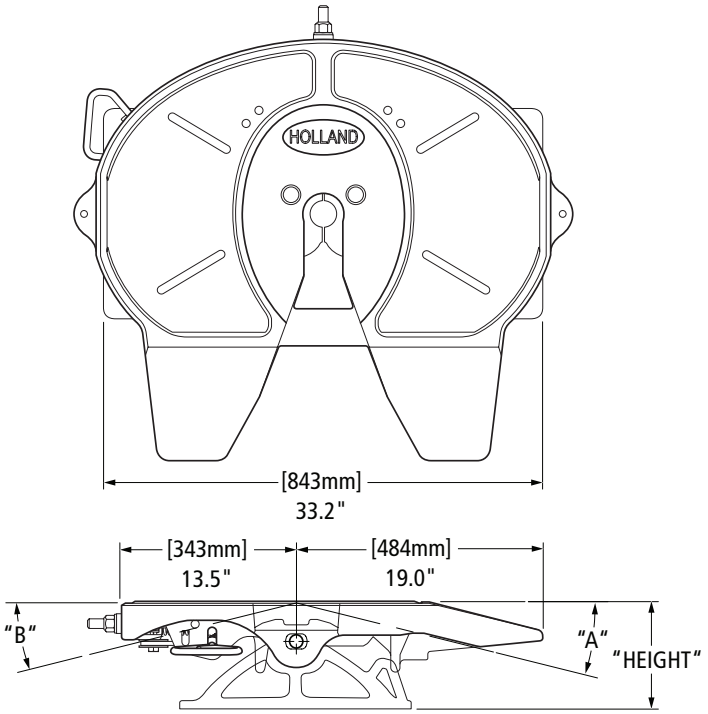

FW PART NUMBER (CAST BRACKET)◊	LEGACY FW PART NUMBER (FABRICATED BRACKET)*◊	HEIGHT	A	B	REPLACEMENT BRACKETS**	FW WEIGHT LBS [KG]
FW33X600XL__	FW33-7824XL__	6.0" [152]	8°	8°	RK-X600	292.00 [132.45]
FW33X700XL__	FW33-7823XL__	7.0" [178]	11°	11°	RK-X700	298.00 [135.17]
FW33X800XL__	FW33-7822XL__	8.0" [203]	14°	14°	RK-X800	303.00 [137.44]
FW33X900XL__	FW33-7821XL__	9.0"	17°	17°	RK-X900	308.00 [139.71]

STANDARD OPTION CODES Replaces the underscore (__) on the new and legacy part number.	
NUMBER CODE	DESCRIPTION
00 / Blank	Standard, No Other Options.
02	Manual Secondary Lock
80	Air Release, OEM Replacement, Left-Hand Only
86	Air Release, New Installations, Left-Hand Only

◊ For right-hand release fifth wheels, change "L" to "R" in part number.
*No Longer Available.
** See bracket section for more information.

 Amendments and errors reserved. © SAF-HOLLAND, Inc.

FW33 Sliding ILS Outboard Mount



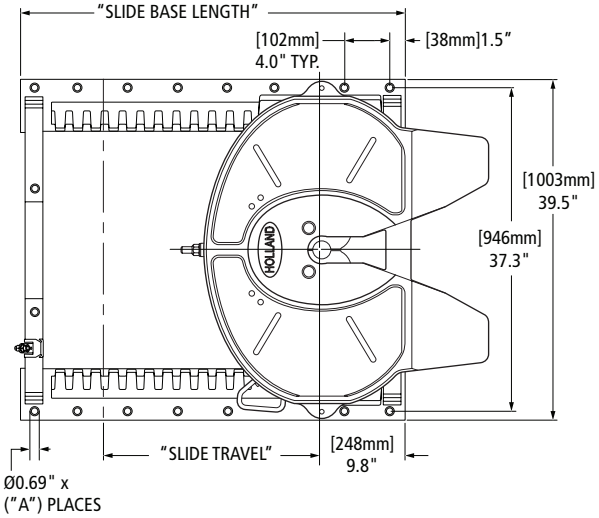

STANDARD OPTION CODES Replaces the Underscore (__) on the new and legacy part number.	
NUMBER CODE	DESCRIPTION
00 / Blank	Standard, No Other Options
02	Manual Secondary Lock
80	Air Release, OEM Replacement, Left-Hand Only
86	Air Release, New Installations, Left-Hand Only

ILS FW PART NUMBER◊	LEGACY		HEIGHT	SLIDE TRAVEL	SLIDE BASE LENGTH	A # OF HOLES	B	C	REPLACEMENT SLIDE BASE AND BRACKET**	REPLACEMENT SLIDE BASE**	REPLACEMENT BRACKET**	FW WEIGHT LBS [KG]
	TRADITIONAL PART NUMBER (AIR RELEASE)*◊	TRADITIONAL PART NUMBER (MANUAL RELEASE)*◊										
FW33A712XL00	FW33-8003T1L__	FW33-8013T1L__	7.0" [178]	12.0" [305]	31" [787]	16	8°	8°	XA-A712	XA-A12	RK-10689-1	439.00 [199.13]
FW33A724XL00	FW33-8003T2L__	FW33-8013T2L__		24.0" [610]	43" [1092]	22			XA-A724	XA-A24		473.00 [214.55]
FW33A736XL00	FW33-8003T4L__	FW33-8013T4L__		36.0" [915]	55" [1397]	28			XA-A736	XA-A36		506.00 [229.52]
FW33A748XL00	FW33-8003T5L__	FW33-8013T5L__		48.0" [1219]	67" [1702]	34			XA-A748	XA-A48		540.00 [244.94]
FW33A812XL00	FW33-8002T1L__	FW33-8012T1L__	8.0" [203]	12.0" [305]	31" [787]	16	12°	10°	XA-A812	XA-A12	RK-10689-2	444.00 [201.40]
FW33A824XL00	FW33-8002T2L__	FW33-8012T2L__		24.0" [610]	43" [1092]	22			XA-A824	XA-A24		477.00 [216.36]
FW33A836XL00	FW33-8002T4L__	FW33-8012T4L__		36.0" [915]	55" [1397]	28			XA-A836	XA-A36		511.00 [231.79]
FW33A848XL00	FW33-8002T5L__	FW33-8012T5L__		48.0" [1219]	67" [1702]	34			XA-A848	XA-A48		544.00 [246.75]
FW33A912XL00	FW33-8001T1L__	FW33-8011T1L__	9.0" [229]	12.0" [305]	31" [787]	16	15°	12°	XA-A912	XA-A12	RK-10689-3	448.00 [203.21]
FW33A924XL00	FW33-8001T2L__	FW33-8011T2L__		24.0" [610]	43" [1092]	22			XA-A924	XA-A24		481.00 [218.18]
FW33A936XL00	FW33-8001T4L__	FW33-8011T4L__		36.0" [915]	55" [1397]	28			XA-A936	XA-A36		515.00 [233.60]
FW33A948XL00	FW33-8001T5L__	FW33-8011T5L__		48.0" [1219]	67" [1702]	34			XA-A948	XA-A48		548.00 [248.57]

◊ For right-hand release fifth wheels, change "L" to "R" in part number.
* No longer available
** See bracket section for more information.

XL-FW10081PM-en-US Rev D 2016-03-01 Amendments and errors reserved. © SAF-HOLLAND, Inc.

FW33 Sliding ILS Inboard Mount for Angle

Also Available With Angle Later In This Section.



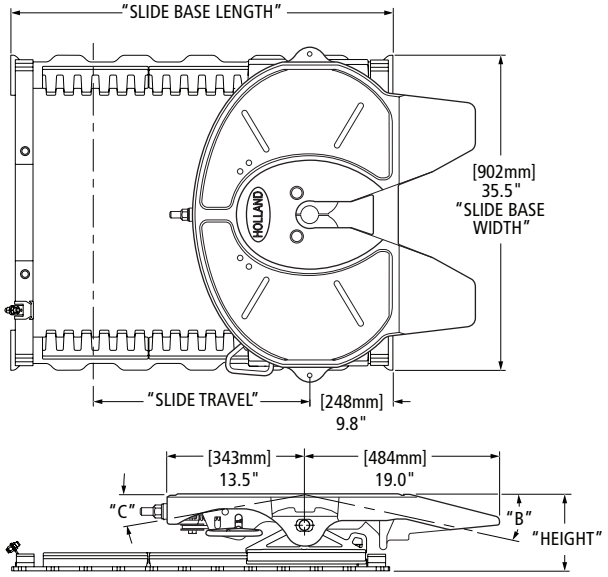

STANDARD OPTION CODES Replaces the Underscore (__) on the new and legacy part number.	
NUMBER CODE	DESCRIPTION
00 / Blank	Standard, No Other Options
02	Manual Secondary Lock
80	Air Release, OEM Replacement, Left-Hand Only
86	Air Release, New Installations, Left-Hand Only

ILS FW PART NUMBER◊	LEGACY		HEIGHT	SLIDE TRAVEL	SLIDE BASE LENGTH	B	C	REPLACEMENT SLIDE BASE AND BRACKET**	REPLACEMENT SLIDE BASE**	REPLACEMENT BRACKETS**	FW WEIGHT LBS [KG]
	TRADITIONAL PART NUMBER (AIR RELEASE)*◊	TRADITIONAL PART NUMBER (MANUAL RELEASE)*◊									
FW33B712XL__	FW33-7003X1L__	FW33-7013X1L__	7.1"	12.0" [305]	31" [787]	8°	8°	XA-B712	XA-B12	RK-10689-1	423.00 [191.87]
FW33B724XL__	FW33-7003X2L__	FW33-7013X2L__		24.0" [610]	43" [1092]			XB-B724	XA-B24		450.00 [204.12]
FW33B736XL__	FW33-7003X4L__	FW33-7013X4L__		36.0" [915]	55" [1397]			XA-B736	XA-B36		479.00 [217.27]
FW33B748XL__	FW33-7003X5L__	FW33-7013X5L__		48.0" [1219]	67" [1702]			XA-B748	XA-B48		506.00 [229.52]
FW33B812XL__	FW33-7002X1L__	FW33-7012X1L__	8.1"	12.0" [305]	31" [787]	12°	10°	XA-B812	XA-B12	RK-10689-2	427.00 [193.68]
FW33B824XL__	FW33-7002X2L__	FW33-7012X2L__		24.0" [610]	43" [1092]			XA-B824	XA-B24		455.00 [206.38]
FW33B836XL__	FW33-7002X4L__	FW33-7012X4L__		36.0" [915]	55" [1397]			XA-B836	XA-B36		483.00 [219.09]
FW33B848XL__	FW33-7002X5L__	FW33-7012X5L__		48.0" [1219]	67" [1702]			XA-B848	XA-B48		511.00 [231.79]
FW33B912XL__	FW33-7001X1L__	FW33-7011X1L__	9.1"	12.0" [305]	31" [787]	15°	12°	XA-B912	XA-B12	RK-10689-3	431.00 [195.50]
FW33B924XL__	FW33-7001X2L__	FW33-7011X2L__		24.0" [610]	43" [1092]			XA-B924	XA-B24		459.00 [208.20]
FW33B936XL__	FW33-7001X4L__	FW33-7011X4L__		36.0" [915]	55" [1397]			XA-B936	XA-B36		487.00 [220.90]
FW33B948XL__	FW33-7001X5L__	FW33-7011X5L__		48.0" [1219]	67" [1702]			XA-B948	XA-B48		515.00 [233.60]

◊ For right-hand release fifth wheels, change "L" to "R" in part number.
* No longer available
** See bracket section for more information.

 Amendments and errors reserved. © SAF-HOLLAND, Inc.

FW33 Sliding Traditional Outboard Mount

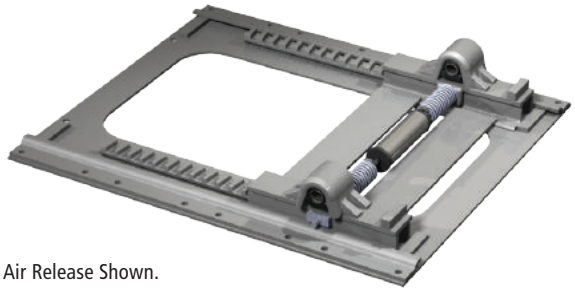

Air Release Shown.

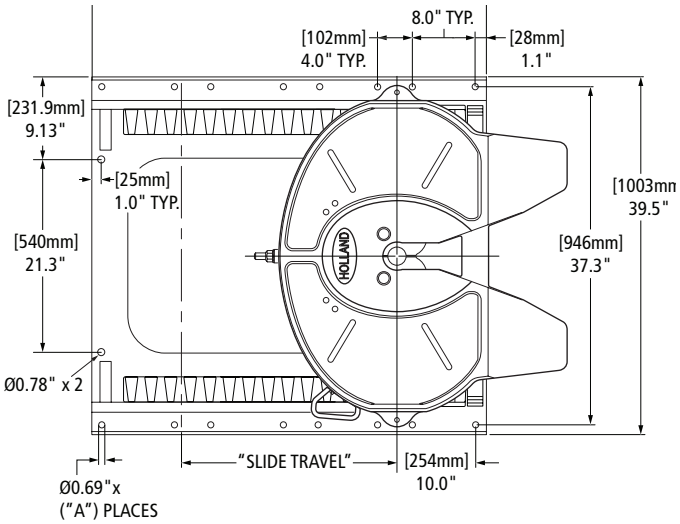

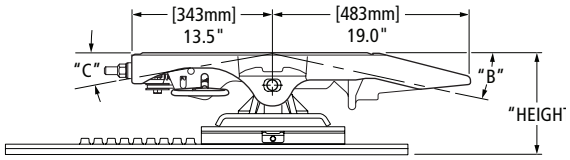

STANDARD OPTION CODES Replaces the Underscore (__) on the new and legacy part number.	
NUMBER CODE	DESCRIPTION
00 / Blank	Standard, No Other Options
02	Manual Secondary Lock
47	Tilt Stops
80	Air Release, OEM Replacement Left-Hand Only

STANDARD OPTION CODES Replaces the Underscore (__) on the new and legacy part number.	
NUMBER CODE	DESCRIPTION
86	Air Release, Aftermarket Installations, Air Control Modules Included Left-Hand Only
0G	Plunger Dip Control

LEGACY FW PART NUMBER*◊	REPLACED BY ILS FW PART NUMBER◊	SLIDE BRACKET TYPE	HEIGHT	SLIDE TRAVEL	SLIDE BASE LENGTH	A # OF HOLES	B	C	REPLACEMENT SLIDE BASE AND BRACKET**	REPLACEMENT SLIDE BASE**	REPLACEMENT BRACKETS**	FW WEIGHT LBS [KG]
FW33-8003T1L__	FW33A712XL__	Air Release	7.0" [178]	10.7" [272]	42.2" [1072]	16	14°†	7°	—	XA-07871-1L	XA-7003	488.00 [221.35]
FW33-8003T2L__	FW33A724XL__			16.8" [427]	50.2" [1275]	18			—	XA-07871-2L		510.00 [231.33]
FW33-8003T3L__	FW33A724XL__			24.5" [622]	55.2" [1402]	20			—	XA-07871-3L		536.00 [243.13]
FW33-8003T4L__	FW33A736XL__			41.3" [1049]	74.2" [1885]	26			—	XA-07871-4L		589.00 [267.17]
FW33-8002T1L__	FW33A812XL__		8.0" [203]	12.2" [310]	34.2" [869]	12	14°	19°	—	XA-07871-1	XA-7002	463.00 [210.01]
FW33-8002T2L__	FW33A824XL__			18.4" [467]	42.2" [1072]	16			—	XA-07871-2		477.00 [216.36]
FW33-8002T3L__	FW33A824XL__			24.5" [622]	46.2" [1173]	16			—	XA-07871-3		508.00 [230.42]
FW33-8002T4L__	FW33A836XL__			36.7" [932]	58.2" [1478]	20			—	XA-07871-4		532.00 [241.31]
FW33-8002T5L__	FW33A848XL__			48.9" [1242]	70.2" [1783]	24			—	XA-07871-5		572.00 [259.45]

◊ For right-hand release fifth wheels, change "L" to "R" in part number.
† If Option Code 47 Dimension Changes to 11°.
* No longer available if replacement exists.
** See bracket section for more information.

XL-FW10081PM-en-US Rev D 2016-03-01 Amendments and errors reserved. © SAF-HOLLAND, Inc.

LEGACY FW PART NUMBER *◊	REPLACED BY ILS FW PART NUMBER◊	SLIDE BRACKET TYPE	HEIGHT	SLIDE TRAVEL	SLIDE BASE LENGTH	A # OF HOLES	B	C	REPLACEMENT SLIDE BASE AND BRACKET**	REPLACEMENT SLIDE BASE**	REPLACEMENT BRACKETS**	FW WEIGHT LBS [KG]
FW33-8001T1L__	FW33A912XL__	Air Release	9.0" [229]	12.2" [310]	34.2" [869]	12	17°†	19°	—	XA-07871-1	XA-7002	468.00 [212.28]
FW33-8001T2L__	FW33A924XL__			18.4" [467]	42.2" [1072]	16			—	XA-07871-2		482.00 [218.63]
FW33-8001T3L__	FW33A924XL__			24.5" [622]	46.2" [1173]	16			—	XA-07871-3		513.00 [232.69]
FW33-8001T4L__	FW33A936XL__			36.7" [932]	58.2" [1478]	20			—	XA-07871-4		537.00 [243.58]
FW33-8001T5L__	FW33A948XL__			48.9" [1242]	70.2" [1783]	24			—	XA-07871-5		577.00 [261.72]
FW33-8301T1L__	—		8.5"	10.7" [272]	42.2" [1072]	16	16°	15°	XA-8311-T1	XA-07871-1L	XA-7301	495.00 [224.53]
FW33-8301T2L__	—			16.8" [427]	50.2" [1275]	18			XA-8311-T2	XA-07871-2L		517.00 [234.51]
FW33-8301T3L__	—			24.5" [622]	55.2" [1402]	20			XA-8311-T3	XA-07871-3L		543.00 [246.30]
FW33-8301T4L__	—			41.3" [1049]	74.2" [1885]	26			XA-8311-T4	XA-07871-4L		596.00 [270.34]
FW33-8009T2L__	—		10.5" [318]	13.8" [351]	42.2" [1072]	16	21°	22°	XA-8301-T1	XA-07871-2	XA-7009	513.00 [232.69]
FW33-8009T3L__	—			19.9" [505]	46.2" [1173]	16			XA-8301-T2	XA-07871-3		544.00 [246.75]
FW33-8009T4L__	—			32.1" [815]	58.2" [1478]	20			XA-8301-T3	XA-07871-4		568.00 [257.64]
FW33-8009T5L__	—			44.4" [1128]	70.2" [1783]	24			XA-8301-T4	XA-07871-5		608.00 [275.78]
FW33-8013T1L__	FW33A712XL__	Manual Release	7.0" [178]	10.7" [272]	42.2" [1072]	16	14°†	7°	—	XA-07871-1	XA-7013	495.00 [224.53]
FW33-8013T2L__	FW33A724XL__			16.8" [427]	50.2" [1275]	18			—	XA-07871-2		517.00 [234.51]
FW33-8013T3L__	FW33A724XL__			24.5" [622]	55.2" [1402]	20			—	XA-07871-3		543.00 [246.30]
FW33-8013T4L__	FW33A736XL__			41.3" [1049]	74.2" [1885]	26			—	XA-07871-4		596.00 [270.34]
FW33-8012T1L__	FW33A812XL__		8.0" [203]	12.2" [310]	34.2" [869]	12	14°†	19°	—	XA-07871-1	XA-7012	470.00 [213.19]
FW33-8012T2L__	FW33A824XL__			18.4" [467]	42.2" [1072]	16			—	XA-07871-2		484.00 [219.54]
FW33-8012T3L__	FW33A824XL__			24.5" [622]	46.2" [1173]	16			—	XA-07871-3		515.00 [233.60]
FW33-8012T4L__	FW33A836XL__			58.2" [1478]	36.7" [932]	20			—	XA-07871-4		539.00 [244.49]
FW33-8012T5L__	FW33A848XL__			48.8" [1240]	70.2" [1783]	24			—	XA-07871-5		579.00 [262.63]
FW33-8011T1L__	FW33A912XL__		9.0" [229]	12.2" [310]	34.2" [869]	12	17°†	19°	—	XA-07871-1	XA-7011	475.00 [215.46]
FW33-8011T2L__	FW33A924XL__			18.4" [467]	42.2" [1072]	16			—	XA-07871-2		489.00 [221.81]
FW33-8011T3L__	FW33A924XL__			46.2" [1173]	24.5" [622]	16			—	XA-07871-3		520.00 [235.87]
FW33-8011T4L__	FW33A936XL__			36.7" [932]	58.2" [1478]	20			—	XA-07871-4		544.00 [246.75]
FW33-8011T5L__	FW33A948XL__			48.9" [1242]	70.2" [1783]	24			—	XA-07871-5		584.00 [264.90]
FW33-8311T1L__	—		8.5"	10.7" [272]	42.2" [1072]	16	16°	15°	XA-8311-T1	XA-07871-1L	XA-7311	502.00 [227.70]
FW33-8311T2L__	—			16.8" [427]	50.2" [1275]	18			XA-8311-T2	XA-07871-2L		524.00 [237.68]
FW33-8311T3L__	—			24.5" [622]	55.2" [1402]	20			XA-8311-T3	XA-07871-3L		550.00 [249.48]
FW33-8311T4L__	—			41.3" [1049]	74.2" [1885]	26			XA-8311-T4	XA-07871-4L		603.00 [273.52]
FW33-8019T2L__	—		10.5" [318]	13.8" [351]	42.2" [1072]	16	21°	21°	XA-8019-T2	XA-07871-2	XA-7019	520.00 [235.87]
FW33-8019T3L__	—			19.9" [505]	46.2" [1173]	16			XA-8019-T3	XA-07871-3		551.00 [249.93]
FW33-8019T4L__	—			32.1" [815]	58.2" [1478]	20			XA-8019-T4	XA-07871-4		575.00 [260.82]
FW33-8019T5L__	—			44.4" [1128]	70.2" [1783]	24			XA-8019-T5	XA-07871-5		615.00 [278.96]

◊ For right-hand release fifth wheels, change "L" to "R" in part number.
† If Option Code 47 Dimension Changes to 11°
* No longer available if replacement exists.
** See bracket section for more information.

 Amendments and errors reserved. © SAF-HOLLAND, Inc.

FW33 Sliding Traditional Inboard for Angle Mount

Also Available With Angle Later In This Section.

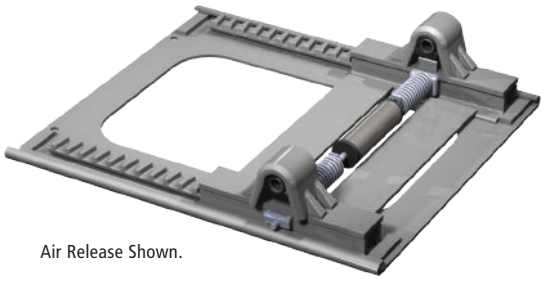

Air Release Shown.

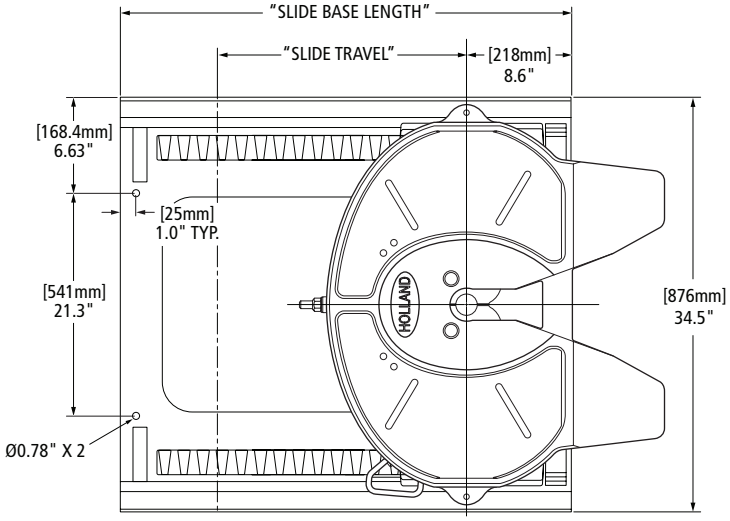

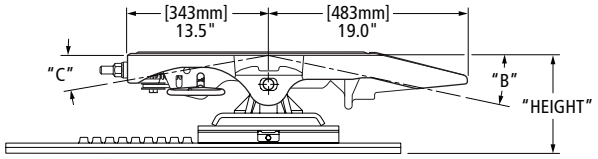

STANDARD OPTION CODES Replaces the Underscore (__) on the new and legacy part number.	
NUMBER CODE	**DESCRIPTION**
00 / Blank	Standard, No Other Options
02	Manual Secondary Lock
11	Weight Saver Cutout
30	Manual Secondary Lock and Weight Saver Cutout
80	Air Release, OEM Replacement, Left-Hand Only
86	Air Release, Aftermarket Installations, Air Control Modules Included, Left-Hand Only
90	Weight Saver Cutout and Air Release, OEM Replacement, Left-Hand Only

LEGACY FW PART NUMBER*◊	REPLACED BY ILS FW PART NUMBER◊	SLIDE BRACKET TYPE	HEIGHT	SLIDE TRAVEL	SLIDE BASE LENGTH	B	C	REPLACEMENT SLIDE BASE AND BRACKET**	REPLACEMENT SLIDE BASE**	REPLACEMENT BRACKETS**	FW WEIGHT LBS [KG]
FW33-7003X1L__	FW33B712XL__	Air Release	7.0" [178]	10.7" [272]	38.9" [988]	11°	7°	—	XA-0751-1	XA-7003	474.00 [215.00]
FW33-7003X2L__	FW33B724XL__			16.8" [427]	45.0" [1143]			—	XA-0751-2		488.00 [221.35]
FW33-7003X3L__	FW33B724XL__			24.5" [622]	52.6" [1336]			—	XA-0751-3A		508.00 [230.42]
FW33-7003X4L__	FW33B736XL__			41.3" [1049]	69.5" [1765]			—	XA-0751-4		530.00 [240.40]
FW33-7003X5L__	FW33B748XL__			53.6" [1361]	82.0" [2082]			—	XA-0751-5		590.00 [267.62]
FW33-7003X6L__	—			65.8" [1671]	94.0" [2387]			XA-7003-X6	XA-0751-6		646.00 [293.02]
FW33-7002X1L__	FW33B812XL__		8.0" [203]	12.2" [310]	32.8" [833]	14°	19°	—	XA-0750-1	XA-7002	479.00 [217.27]
FW33-7002X2L__	FW33B824XL__			18.4" [467]	38.9" [988]			—	XA-0750-2		509.00 [230.88]
FW33-7002X3L__	FW33B824XL__			24.5" [622]	45.0" [1143]			—	XA-0750-3		531.00 [240.86]
FW33-7002X4L__	FW33B836XL__			36.7" [932]	57.2" [1452]			—	XA-0750-4		583.00 [264.44]
FW33-7002X5L__	FW33B848XL__			48.9" [1242]	69.5" [1765]			—	XA-0750-5		638.00 [289.39]
FW33-7002X6L__	—			61.2" [1554]	82.0" [2082]			XA-7002-X6	XA-0750-6		688.00 [312.07]
FW33-7002X7L__	—			73.4" [1864]	94.0" [2387]			XA-7002-X7	XA-0750-7		753.00 [341.56]

◊ For right-hand release fifth wheels, change "L" to "R" in part number.
* No longer available if replacement exists.
** See bracket section for more information.

XL-FW10081PM-en-US Rev D 2016-03-01 Amendments and errors reserved. © SAF-HOLLAND, Inc.

LEGACY FW PART NUMBER*◊	REPLACED BY ILS FW PART NUMBER◊	SLIDE BRACKET TYPE	HEIGHT	SLIDE TRAVEL	SLIDE BASE LENGTH	B	C	REPLACEMENT SLIDE BASE AND BRACKET**	REPLACEMENT SLIDE BASE**	REPLACEMENT BRACKETS**	FW WEIGHT LBS [KG]
FW33-7001X1L__	FW33B912XL__	Air Release	9.0" [229]	12.2" [310]	32.8" [833]	16°	19°	—	XA-0750-1	XA-7001	490.00 [222.26]
FW33-7001X2L__	FW33B924XL__			18.4" [467]	38.9" [988]			—	XA-0750-2		520.00 [235.87]
FW33-7001X3L__	FW33B924XL__			24.5" [622]	45.0" [1143]			—	XA-0750-3		542.00 [245.85]
FW33-7001X4L__	FW33B936XL__			36.7" [932]	57.2" [1452]			—	XA-0750-4		594.00 [269.43]
FW33-7001X5L__	FW33B948XL__			48.9" [1242]	69.5" [1765]			—	XA-0750-5		649.00 [294.38]
FW33-7001X6L__	—			61.2" [1554]	82.0" [2082]			XA-7001-X6	XA-0750-6		699.00 [317.06]
FW33-7301X1L__	—		8.5"	10.7" [272]	38.9" [988]	16°	15°	XA-7301-X1	XA-0751-1	XA-7301	481.00 [218.18]
FW33-7301X2L__	—			16.8" [427]	45.0" [1143]			XA-7301-X2	XA-0751-2		495.00 [224.53]
FW33-7301X3L__	—			24.5" [622]	52.6" [1336]			XA-7301-X3	XA-0751-3A		515.00 [233.60]
FW33-7301X4L__	—			41.3" [1049]	69.5" [1765]			XA-7301-X4	XA-0751-4		537.00 [243.58]
FW33-7301X5L__	—			53.6" [1361]	82.0" [2082]			XA-7301-X5	XA-0751-5		597.00 [270.79]
FW33-7301X6L__	—			65.8" [1671]	94.0" [2387]			XA-7301-X6	XA-0751-6		653.00 [296.20]
FW33-7009X2L__	—		10.5" [318]	13.8" [351]	38.9" [988]	21°	22°	XA-7009-X2	XA-0750-2	XA-7009	554.00 [251.29]
FW33-7009X3L__	—			19.9" [505]	45.0" [1143]			XA-7009-X3	XA-0750-3		576.00 [261.27]
FW33-7009X4L__	—			32.1" [815]	57.2" [1452]			XA-7009-X4	XA-0750-4		628.00 [284.86]
FW33-7009X5L__	—			44.4" [1128]	69.5" [1765]			XA-7009-X5	XA-0750-5		683.00 [309.80]
FW33-7009X6L__	—			56.6" [1438]	82.0" [2082]			XA-7009-X6	XA-0750-6		733.00 [332.48]
FW33-7013X1L__	FW33B712XL__	Manual Release	7.0" [178]	10.7" [272]	38.9" [988]	11°	5°	—	XA-0751-1	XA-7013	483.00 [219.09]
FW33-7013X2L__	FW33B724XL__			16.8" [427]	45.0" [1143]			—	XA-0751-2		497.00 [225.44]
FW33-7013X3L__	FW33B724XL__			24.5" [622]	52.6" [1336]			—	XA-0751-3A		517.00 [234.51]
FW33-7013X4L__	FW33B736XL__			41.3" [1049]	69.5" [1765]			—	XA-0751-4		539.00 [244.49]
FW33-7013X5L__	FW33B748XL__			53.6" [1361]	82.0" [2082]			—	XA-0751-5		599.00 [271.70]
FW33-7013X6L__	—			65.8" [1671]	94.0" [2387]			XA-7013-X6	XA-0751-6		655.00 [297.10]
FW33-7012X1L__	FW33B812XL__		8.0" [203]	12.2" [310]	32.8" [833]	14°	11°	—	XA-0750-1	XA-7012	488.00 [221.35]
FW33-7012X2L__	FW33B824XL__			18.4" [467]	38.9" [988]			—	XA-0750-2		518.00 [234.96]
FW33-7012X3L__	FW33B824XL__			24.5" [622]	45.0" [1143]			—	XA-0750-3		540.00 [244.94]
FW33-7012X4L__	FW33B836XL__			36.7" [932]	57.2" [1452]			—	XA-0750-4		592.00 [268.53]
FW33-7012X5L__	FW33B848XL__			48.9" [1242]	69.5" [1765]			—	XA-0750-5		647.00 [293.47]
FW33-7012X6L__	—			61.2" [1554]	82.0" [2082]			XA-7012-X6	XA-0750-6		697.00 [316.15]
FW33-7011X1L__	FW33B912XL__		9.0" [229]	12.2" [310]	32.8" [833]	16°	19°	—	XA-0750-1	XA-7011	494.00 [224.07]
FW33-7011X2L__	FW33B924XL__			18.4" [467]	38.9" [988]			—	XA-0750-2		524.00 [237.68]
FW33-7011X3L__	FW33B924XL__			24.5" [622]	45.0" [1143]			—	XA-0750-3		546.00 [247.66]
FW33-7011X4L__	FW33B936XL__			36.7" [932]	57.2" [1452]			—	XA-0750-4		597.00 [270.79]
FW33-7011X5L__	FW33B948XL__			48.9" [1242]	69.5" [1765]			—	XA-0750-5		653.00 [296.20]
FW33-7011X6L__	—			61.2" [1554]	82.0" [2082]			XA-7011-X6	XA-0750-6		703.00 [318.88]
FW33-7311X1L__	—		8.5"	10.7" [272]	38.9" [988]	16°	15°	XA-7311-X1	XA-0751-1	XA-7311	490.00 [222.26]
FW33-7311X2L__	—			16.8" [427]	45.0" [1143]			XA-7311-X2	XA-0751-2		504.00 [228.61]
FW33-7311X3L__	—			24.5" [622]	52.6" [1336]			XA-7311-X3	XA-0751-3A		524.00 [237.68]
FW33-7311X4L__	—			41.3" [1049]	69.5" [1765]			XA-7311-X4	XA-0751-4		546.00 [247.66]
FW33-7311X5L__	—			53.6" [1361]	82.0" [2082]			XA-7311-X5	XA-0751-5		606.00 [274.88]
FW33-7311X6L__	—			65.8" [1671]	94.0" [2387]			XA-7311-X6	XA-0751-6		662.00 [300.28]
FW33-7019X2L__	—		10.5" [318]	13.8" [351]	38.9" [988]	21°	22°	—	XA-0750-2	XA-7019	566.00 [256.73]
FW33-7019X3L__	—			19.9" [505]	45.0" [1143]			—	XA-0750-3		588.00 [266.71]
FW33-7019X4L__	—			32.1" [815]	57.2" [1452]			—	XA-0750-4		640.00 [290.30]
FW33-7019X5L__	—			44.4" [1128]	69.5" [1765]			—	XA-0750-5		695.00 [315.25]
FW33-7019X6L__	—			56.6" [1438]	82.0" [2082]			—	XA-0750-6		745.00 [337.93]

◊ For right-hand release fifth wheels, change "L" to "R" in part number.
* No longer available if replacement exists.
** See bracket section for more information.

 Amendments and errors reserved. © SAF-HOLLAND, Inc.

SAF-HOLLAND Group

FW33 Stationary Kompensator® Outboard Plate Mount



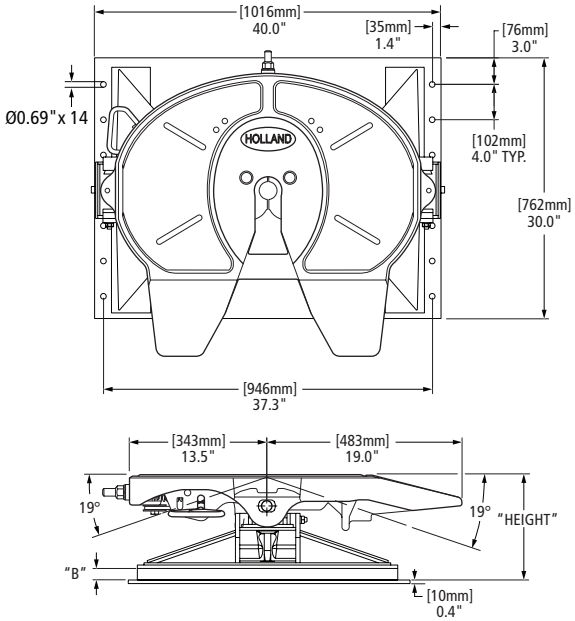

STANDARD OPTION CODES Replaces the Underscore (__) on the part number.	
NUMBER CODE	DESCRIPTION
00/Blank	Standard, No Other Options
02	Manual Secondary Lock
13	Kompensator Dust Covers
19	Komp Lockouts

PART NUMBER	LEGACY PART NUMBER◊*	HEIGHT	B	REPLACEMENT BRACKET**	FW WEIGHT LBS [KG]
FW33KZ1300XL00	FW33-7726XL__	13.1"	3.00"	XA-40-7726	680.00 [308.44]
FW33KZ1200XL00	FW33-7727XL__	12.1"	2.0"	XA-40-7727	675.00 [306.17]
FW33KZ1100XL00	FW33-7729XL__	10.1"	— +	XA-40-7729	613.00 [278.05]

◊ For right-hand release fifth wheels, change "L" to "R" in part number.
+ Kompensator frame is mounted directly to plate, and extends 1.17" below bottom of plate.
** See bracket section for more information.
* No longer available.

FW33 Stationary Kompensator® Inboard Plate Mount for Angle Mounting



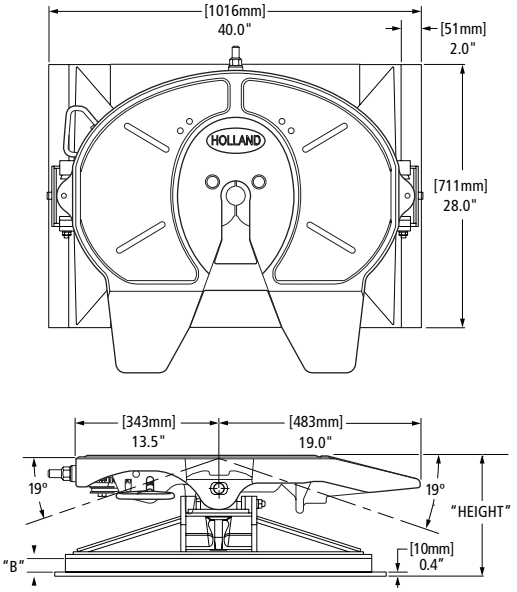

STANDARD OPTION CODES Replaces the Underscore (__) on the part number.	
NUMBER CODE	DESCRIPTION
00/Blank	Standard, No Other Options
02	Manual Secondary Lock
13	Kompensator Dust Covers
19	Komp Lockouts

PART NUMBER	LEGACY PART NUMBER◊*	HEIGHT	B	REPLACEMENT BRACKET**	FW WEIGHT LBS [KG]
FW33KT1300XL00	FW33-7721XL__	13.1"	3.0"	XA-40-7724	682.00 [309.35]
FW33KT1200XL00	FW33-7722XL__	12.1"	2.0"	XA-40-7722	667.00 [302.55]
FW33KT1100XL00	FW33-7723XL__	10.1"	— +	XA-40-7723	605.00 [274.42]

◊ For right-hand release fifth wheels, change "L" to "R" in part number.
+ Kompensator frame is mounted directly to plate, and extends 1.17" below bottom of plate.
** See bracket section for more information.
* No longer available.

XL-FW10081PM-en-US Rev D 2016-03-01 Amendments and errors reserved. © SAF-HOLLAND, Inc.

FW33 Stationary Kompensator® Inboard for Angle Mount

Also Available With Angle Later In This Section.



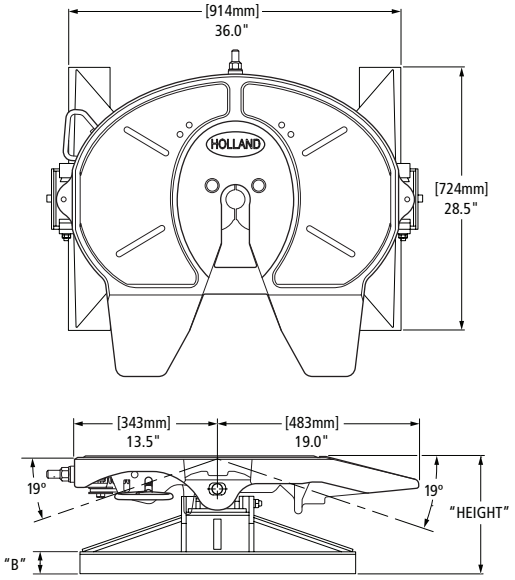

STANDARD OPTION CODES Replaces the Underscore (__) on the part number.	
NUMBER CODE	DESCRIPTION
00/Blank	Standard, No Other Options
02	Manual Secondary Lock
13	Kompensator Dust Covers
14	Grease Fittings in Top Plate, Four (4) Fittings
15	Kompensator Dust Covers and Grease Fittings in Top Plate
19	Komp Lockouts
24	Drilled and Tapped for Auto Lube
80	Air Release, OEM Replacement, Left-Hand Only
82	Drilled and Tapped with Cross Drilled Hole
86	Air Release, Aftermarket Installations, Air Control Modules Included, Left-Hand Only
1A	Manual Secondary Lock and Air Release

PART NUMBER	LEGACY PART NUMBER◊*	HEIGHT	B	REPLACEMENT BRACKET**	FW WEIGHT LBS [KG]
FW33KX1300XL00	FW33-7701XL__	12.8"	3.0"	XA-40-7701	562.00 [254.92]
FW33KX1200XL00	FW33-7702XL__	11.8"	2.0"	XA-40-7702	547.00 [248.12]
FW33KX1100XL00	FW33-7703XL__	9.8"	— +	XA-40-7703	505.00 [229.06]

◊ For right-hand release fifth wheels, change "L" to "R" in part number.
+ Kompensator frame is mounted directly to plate, and extends 1.17" below bottom of plate.
** See bracket section for more information.
* No longer available.

FW33 Sliding Kompensator® Inboard for Angle Mount



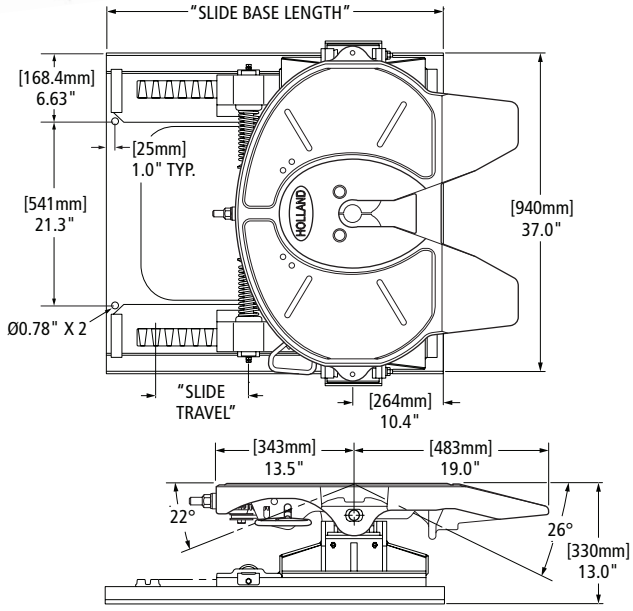

STANDARD OPTION CODES Replaces the Underscore (__) on the part number.	
NUMBER CODE	DESCRIPTION
00/Blank	Standard, No Other Options
02	Manual Secondary Lock
19	Komp Lockouts
24	Drilled and Tapped for Auto Lube
27	Manual Secondary Lock and Komp Lockouts
80	Air Release, OEM Replacement, Left-Hand Only
83	Drilled and Tapped for Auto Lube and Komp Lockouts
86	Air Release, Aftermarket Installation, Air Control Modules Included Left Hand Only

PART NUMBER	LEGACY PART NUMBER◊*	SLIDE TRAVEL	SLIDE BASE LENGTH	REPLACE-MENT SLIDE BASE **	REPLACE-MENT BRACKET **	FW WEIGHT LBS [KG]
FW33KH1311XL00	FW33-7201X1L__	10.7" [272]	38.9" [988]	XA-0284-1	XA-7201	849.00 [385.10]
FW33KH1317XL00	FW33-7201X2L__	16.8" [427]	45.0" [1143]	XA-0284-2		869.00 [394.17]
FW33KH1324XL00	FW33-7201X3L__	24.5" [622]	52.6" [1336]	XA-0284-3A		925.00 [419.57]
FW33KH1341XL00	FW33-7201X4L__	41.3" [1049]	69.5" [1765]	XA-0284-4		946.00 [429.10]
FW33KH1354XL00	FW33-7201X5L__	53.6" [1361]	82.0" [2082]	XA-0284-5		1060.00 [480.81]
FW33KH1366XL00	FW33-7201X6L__	65.8" [1671]	94.0" [2387]	XA-0284-6		1159.00 [525.71]

◊ For right-hand release fifth wheels, change "L" to "R" in part number.
** See bracket section for more information.
* No longer available.

 Amendments and errors reserved. © SAF-HOLLAND, Inc.

FW33 Stationary Brackets with Angle Mount



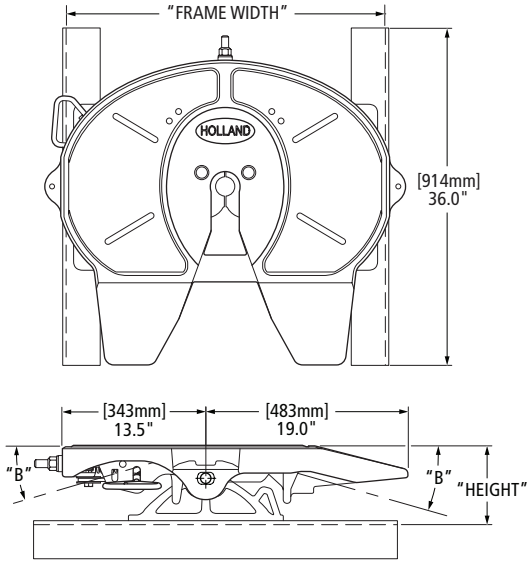

Frame width "A-G": .38" x 4" x 4" angle dimensions
"H-N": .38" x 4" x 6" angle dimensions
See option chart for other options.

STANDARD OPTION CODES Replaces the Underscore (__) on the part number.	
NUMBER CODE	DESCRIPTION
00 / Blank	Standard, No Other Options
02	Manual Secondary Lock
21	.38" x 5" x 5" Angle
51	.38" x 4" x 6" Angle

FRAME WIDTH CODE CHART					
CODE	FRAME WIDTH	CODE	FRAME WIDTH	CODE	FRAME WIDTH
A	33.25" [845]	F	33.88" [861]	L	34.50" [876]
B	33.38" [848]	**G†**	**34.00" [864]**	M	34.62" [879]
C	33.50" [851]	H	34.12" [867]	N	34.75" [883]
D	33.62" [854]	J	34.25" [870]		
E	33.75" [857]	K	34.38" [873]		

† Standard

FW PART NUMBER CAST BRACKET◊	FW PART NUMBER FABRICATED*◊	HEIGHT	B	REPLACEMENT BRACKETS**	FW WEIGHT LBS [KG]
FW33W600GL__	FW33-7814GL__	6.0" [152]	8°	RK-W600-G	350.00 [158.76]
FW33W700GL__	FW33-7813GL__	7.0" [178]	11°	RK-W700-G	356.00 [161.48]
FW33W800GL__	FW33-7812GL__	8.0" [203]	14°	RK-W800-G	361.00 [163.75]
FW33W900GL__	FW33-7811GL__	9.0" [229]	17°	RK-W900-G	366.00 [166.01]
—	FW33-7553GL__	10.8"	15°	XA-7553-G	394.00 [178.72]
—	FW33-7552GL__	11.8"	15°	XA-7552-G	396.00 [179.62]
—	FW33-7551GL__	12.8"	15°	XA-7551-G	394.00 [178.72]

◊ For right-hand release fifth wheels, change "L" to "R" in part number.
* No longer available if cast version exists.
** See bracket section for more information.

XL-FW10081PM-en-US Rev D 2016-03-01 Amendments and errors reserved. © SAF-HOLLAND, Inc.

FW33 Sliding ILS Inboard with Angle Mount

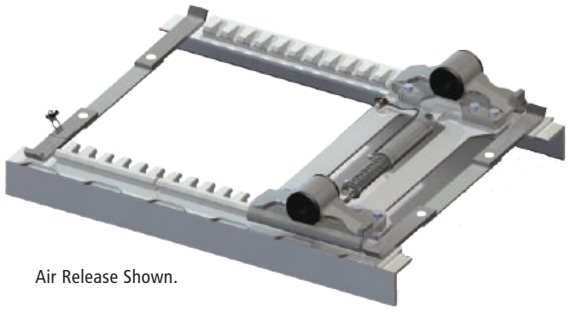

Air Release Shown.

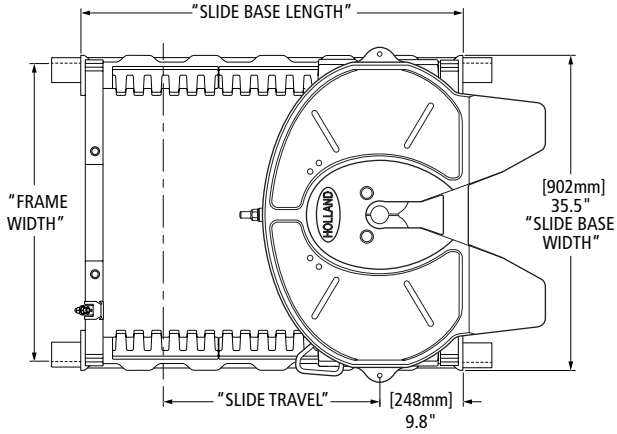

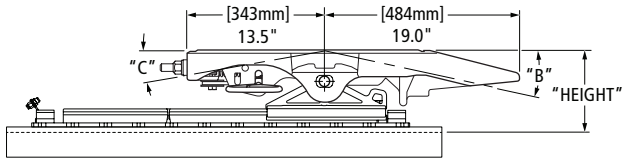

Frame width "A-C": .38" x 3" x 4" angle dimensions
"D-K": .38" x 3.5" x 4" angle dimensions
"K-Q": .38" x 4" x 4" angle dimensions
See option codes for other options.

FRAME WIDTH CODE CHART					
CODE	FRAME WIDTH	CODE	FRAME WIDTH	CODE	FRAME WIDTH
A	33.25" [845]	F	33.88" [861]	L	34.50" [876]
B	33.38" [848]	G†	**34.00" [864]**	M	34.62" [879]
C	33.50" [851]	H	34.12" [867]	N	34.75" [883]
D	33.62" [854]	J	34.25" [870]	P	34.88" [886]
E	33.75" [857]	K	34.38" [873]	Q	35.00"

† Standard

STANDARD OPTION CODES Replaces the Underscore (__) on the new and legacy part number.	
NUMBER CODE	DESCRIPTION
00 / Blank	Standard, No Other Option
02	Manual Secondary Lock
21	.38" x 5" x 5" Angle
51	.38" x 4" x 6" Angle
80	Air Release, OEM Replacement, Left-Hand Only
86	Air Release, Aftermarket Installations, Air Control Modules Included, Left-Hand Only

FW PART NUMBER◊	TRAD. SLIDER PART NUMBER (AIR RELEASE)*◊	TRAD. SLIDER PART NUMBER (MANUAL RELEASE)*◊	HEIGHT	SLIDE TRAVEL	SLIDE BASE LENGTH	B	C	REPLACEMENT SLIDE BASE AND BRACKET**	REPLACEMENT SLIDE BASE **	REPLACEMENT BRACKET**	FW WEIGHT LBS [KG]
FW33B712GL__	FW33-7003G1L__	FW33-7013G1L__	7.5" [191]	12.0" [305]	31" [787]	8°	8°	XA-B712G	XA-B12G	RK-10689-1	474.00 [215.00]
FW33B724GL__	FW33-7003G2L__	FW33-7013G2L__		24.0" [610]	43" [1092]			XA-B724G	XA-B24G	RK-10689-1	520.00 [235.87]
FW33B736GL__	FW33-7003G4L__	FW33-7013G4L__		36.0" [915]	55" [1397]			XA-B736G	XA-B36G	RK-10689-1	567.00 [257.19]
FW33B748GL__	FW33-7003G5L__	FW33-7013G5L__		48.0" [1219]	67" [1702]			XA-B748G	XA-B48G	RK-10689-1	613.00 [278.05]
FW33B812GL__	FW33-7002G1L__	FW33-7012G1L__	8.5" [216]	12.0" [305]	31" [787]	12°	10°	XA-B812G	XA-B12G	RK-10689-2	479.00 [217.27]
FW33B824GL__	FW33-7002G2L__	FW33-7012G2L__		24.0" [610]	43" [1092]			XA-B824G	XA-B24G	RK-10689-2	525.00 [238.14]
FW33B836GL__	FW33-7002G4L__	FW33-7012G4L__		36.0" [915]	55" [1397]			XA-B836G	XA-B36G	RK-10689-2	572.00 [259.45]
FW33B848GL__	FW33-7002G5L__	FW33-7012G5L__		48.0" [1219]	67" [1702]			XA-B848G	XA-B48G	RK-10689-2	617.00 [279.87]
FW33B912GL__	FW33-7001G1L__	FW33-7011G1L__	9.5" [241]	12.0" [305]	31" [787]	15°	12°	XA-B912G	XA-B12G	RK-10689-3	483.00 [219.09]
FW33B924GL__	FW33-7001G2L__	FW33-7011G2L__		24.0" [610]	43" [1092]			XA-B924G	XA-B24G	RK-10689-3	529.00 [239.95]
FW33B936GL__	FW33-7001G4L__	FW33-7011G4L__		36.0" [915]	55" [1397]			XA-B936G	XA-B36G	RK-10689-3	576.00 [261.27]
FW33B948GL__	FW33-7001G5L__	FW33-7011G5L__		48.0" [1219]	67" [1702]			XA-B948G	XA-B48G	RK-10689-3	621.00 [281.68]

◊ For right-hand release fifth wheels, change "L" to "R" in part number.
* No longer available if replacement exists.
** See bracket section for more information.

 Amendments and errors reserved. © SAF-HOLLAND, Inc.

FW33 Sliding Traditional Inboard with Angle Mount

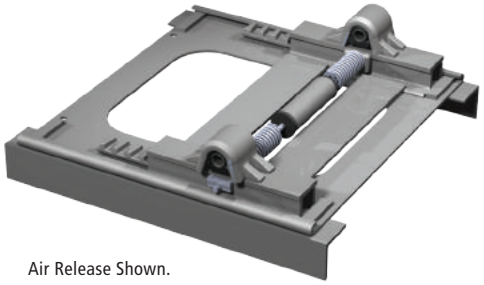

Air Release Shown.

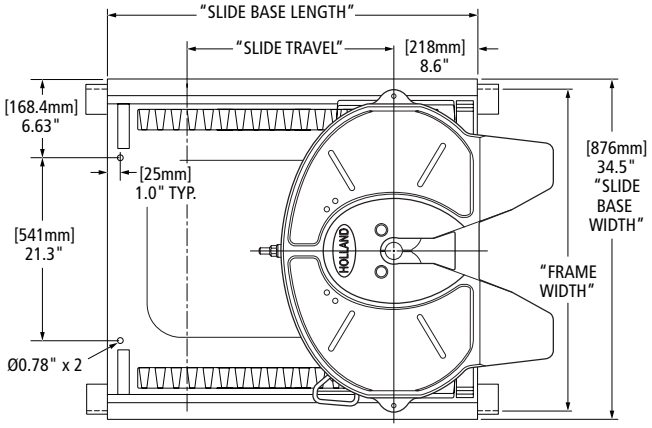

FRAME WIDTH CODE CHART					
CODE	FRAME WIDTH	CODE	FRAME WIDTH	CODE	FRAME WIDTH
A	33.25" [845]	F	33.88" [861]	M	34.62" [879]
B	33.38" [848]	G†	**34.00" [864]**	N	34.75" [883]
C	33.50" [851]	H	34.12" [867]	P	34.88" [886]
D	33.62" [854]	K	34.38" [873]	Q	35.00"
E	33.75" [857]	L	34.50" [876]		

Frame Width "A-L": .38" x 4" x 4" angle dimensions
"M-Q": .38" x 5" x 5" angle dimensions (Option Code 21)
See option codes for other options.

† Standard

STANDARD OPTION CODES Replaces the Underscore (__) on the new and legacy part number.	
NUMBER CODE	DESCRIPTION
00 / Blank	Standard, No Other Options
02	Manual Secondary Lock
21	.38" x 5" x 5" Angle

STANDARD OPTION CODES Replaces the Underscore (__) on the new and legacy part number.	
NUMBER CODE	DESCRIPTION
51	.38" x 4" x 6" Angle
80	Air Release, OEM Replacement Left-Hand Only
86	Air Release, Aftermarket Installations, Air Control Modules Included Left-Hand Only

LEGACY FW PART NUMBER*◊	REPLACED BY ILS FW PART NUMBER◊	SLIDE BRACKET TYPE	HEIGHT	SLIDE TRAVEL	SLIDE BASE LENGTH	B	C	REPLACEMENT SLIDE BASE**	REPLACEMENT BRACKET**	FW WEIGHT LBS [KG]
FW33-7003G1L__	FW33B712GL00	AIR RELEASE	7.4"	10.7" [272]	38.9" [988]	11°	7°	XA-0753-G1-__	XA-7003	537.00 [243.58]
FW33-7003G2L__	FW33B724GL00			16.8" [427]	45.0" [1143]			XA-0753-G2-__		561.00 [254.47]
FW33-7003G3L__	FW33B724GL00			24.5" [622]	52.6" [1336]			XA-0753-G3-__		594.00 [269.43]
FW33-7003G4L__	FW33B736GL00			41.3" [1049]	69.5" [1765]			XA-0753-G4-__		652.00 [295.74]
FW33-7003G5L__	FW33B748GL00			53.6" [1361]	82.0" [2082]			XA-0753-G5-__		733.00 [332.48]
FW33-7003G6L__	—			65.8" [1671]	94.0" [2387]			XA-0753-G6-__		808.00 [366.50]
FW33-7002G1L__	FW33B812GL00		8.4"	12.2" [310]	32.8" [833]	16°	19°	XA-0753-G1-__	XA-7002	534.00 [242.22]
FW33-7002G2L__	FW33B824GL00			18.4" [467]	38.9" [988]			XA-0753-G2-__		583.00 [264.44]
FW33-7002G3L__	FW33B824GL00			24.5" [622]	45.0" [1143]			XA-0753-G3-__		605.00 [274.42]

◊ For right-hand release fifth wheels, change "L" to "R" in part number.
* No longer available if replacement exists.
** See bracket section for more information.

XL-FW10081PM-en-US Rev D 2016-03-01 Amendments and errors reserved. © SAF-HOLLAND, Inc.

LEGACY FW PART NUMBER*◊	REPLACED BY ILS FW PART NUMBER◊	SLIDE BRACKET TYPE	HEIGHT	SLIDE TRAVEL	SLIDE BASE LENGTH	B	C	REPLACEMENT SLIDE BASE**	REPLACEMENT BRACKET**	FW WEIGHT LBS [KG]
FW33-7002G4L__	FW33B836GL00	AIR RELEASE	8.4"	36.7" [932]	57.2" [1452]	16°	19°	XA-0753-G4-__	XA-7002	677.00 [307.08]
FW33-7002G5L__	FW33B848GL00			48.9" [1242]	69.5" [1765]			XA-0753-G5-__		752.00 [341.10]
FW33-7002G6L__	—			61.2" [1554]	82.0" [2082]			XA-0753-G6-__		823.00 [373.31]
FW33-7001G1L__	FW33B912GL00		9.4"	12.2" [310]	32.8" [833]	16°	19°	XA-0753-G1-__	XA-7001	534.00 [242.22]
FW33-7001G2L__	FW33B924GL00			18.4" [467]	38.9" [988]			XA-0753-G2-__		583.00 [264.44]
FW33-7001G3L__	FW33B924GL00			24.5" [622]	45.0" [1143]			XA-0753-G3-__		605.00 [274.42]
FW33-7001G4L__	FW33B936GL00			36.7" [932]	57.2" [1452]			XA-0753-G4-__		677.00 [307.08]
FW33-7001G5L__	FW33B948GL00			48.9" [1242]	69.5" [1765]			XA-0753-G5-__		752.00 [341.10]
FW33-7001G6L__	—			61.2" [1554]	82.0" [2082]			XA-0753-G6-__		823.00 [373.31]
FW33-7301G1L__	—		8.9"	10.7" [272]	38.9" [988]	16°	15°	XA-0753-G1-__	XA-7301	544.00 [246.75]
FW33-7301G2L__	—			16.8" [427]	45.0" [1143]			XA-0753-G2-__		568.00 [257.64]
FW33-7301G3L__	—			24.5" [622]	52.6" [1336]			XA-0753-G3-__		601.00 [272.61]
FW33-7301G4L__	—			41.3" [1049]	69.5" [1765]			XA-0753-G4-__		659.00 [298.92]
FW33-7301G5L__	—			53.6" [1361]	82.0" [2082]			XA-0753-G5-__		740.00 [335.66]
FW33-7301G6L__	—			65.8" [1671]	94.0" [2387]			XA-0753-G6-__		815.00 [369.68]
FW33-7009G2L__	—		10.9"	13.8" [351]	38.9" [988]	21°	22°	XA-0752-G2-__	XA-7009	632.00 [286.67]
FW33-7009G3L__	—			19.9" [505]	45.0" [1143]			XA-0752-G3-__		654.00 [296.65]
FW33-7009G4L__	—			32.1" [815]	57.2" [1452]			XA-0752-G4-__		726.00 [329.31]
FW33-7009G5L__	—			44.4" [1128]	69.5" [1765]			XA-0752-G5-__		801.00 [363.33]
FW33-7009G6L__	—			56.6" [1438]	82.0" [2082]			XA-0752-G6-__		872.00 [395.53]
FW33-7009G7L__	—			68.8" [1748]	94.0" [2387]			XA-0752-G7-__		954.00 [432.73]
FW33-7013G1L__	FW33B712GL00	MANUAL RELEASE	7.4"	10.7" [272]	38.9" [988]	11°	7°	XA-0753-G1-__	XA-7013	537.00 [243.58]
FW33-7013G2L__	FW33B724GL00			16.8" [427]	45.0" [1143]			XA-0753-G2-__		561.00 [254.47]
FW33-7013G3L__	FW33B724GL00			24.5" [622]	52.6" [1336]			XA-0753-G3-__		594.00 [269.43]
FW33-7013G4L__	FW33B736GL00			41.3" [1049]	69.5" [1765]			XA-0753-G4-__		652.00 [295.74]
FW33-7013G5L__	FW33B748GL00			53.6" [1361]	82.0" [2082]			XA-0753-G5-__		733.00 [332.48]
FW33-7013G6L__	—			65.8" [1671]	94.0" [2387]			XA-0753-G6-__		808.00 [366.50]
FW33-7012G1L__	FW33B812GL00		8.4"	12.2" [310]	32.8" [833]	16°	19°	XA-0753-G1-__	XA-7012	534.00 [242.22]
FW33-7012G2L__	FW33B824GL00			18.4" [467]	38.9" [988]			XA-0753-G2-__		583.00 [264.44]
FW33-7012G3L__	FW33B824GL00			24.5" [622]	45.0" [1143]			XA-0753-G3-__		605.00 [274.42]
FW33-7012G4L__	FW33B836GL00			36.7" [932]	57.2" [1452]			XA-0753-G4-__		677.00 [307.08]
FW33-7012G5L__	FW33B848GL00			48.9" [1242]	69.5" [1765]			XA-0753-G5-__		752.00 [341.10]
FW33-7012G6L__	—			61.2" [1554]	82.0" [2082]			XA-0753-G6-__		823.00 [373.31]
FW33-7011G1L__	FW33B912GL00		9.4"	12.2" [310]	32.8" [833]	16°	19°	XA-0753-G1-__	XA-7011	534.00 [242.22]
FW33-7011G2L__	FW33B924GL00			18.4" [467]	38.9" [988]			XA-0753-G2-__		583.00 [264.44]
FW33-7011G3L__	FW33B924GL00			24.5" [622]	45.0" [1143]			XA-0753-G3-__		605.00 [274.42]
FW33-7011G4L__	FW33B936GL00			36.7" [932]	57.2" [1452]			XA-0753-G4-__		677.00 [307.08]
FW33-7011G5L__	FW33B948GL00			48.9" [1242]	69.5" [1765]			XA-0753-G5-__		752.00 [341.10]
FW33-7011G6L__	—			61.2" [1554]	82.0" [2082]			XA-0753-G6-__		823.00 [373.31]
FW33-7311G1L__	—		8.9"	10.7" [272]	38.9" [988]	16°	15°	XA-0753-G1-__	XA-7311	544.00 [246.75]
FW33-7311G2L__	—			16.8" [427]	45.0" [1143]			XA-0753-G2-__		568.00 [257.64]
FW33-7311G3L__	—			24.5" [622]	52.6" [1336]			XA-0753-G3-__		601.00 [272.61]
FW33-7311G4L__	—			41.3" [1049]	69.5" [1765]			XA-0753-G4-__		659.00 [298.92]
FW33-7311G5L__	—			53.6" [1361]	82.0" [2082]			XA-0753-G5-__		740.00 [335.66]
FW33-7311G6L__	—			65.8" [1671]	94.0" [2387]			XA-0753-G6-__		815.00 [369.68]
FW33-7019G2L__	—		10.9"	13.8" [351]	38.9" [988]	21°	22°	XA-0752-G2-__	XA-7019	632.00 [286.67]
FW33-7019G3L__	—			19.9" [505]	45.0" [1143]			XA-0752-G3-__		654.00 [296.65]
FW33-7019G4L__	—			32.1" [815]	57.2" [1452]			XA-0752-G4-__		726.00 [329.31]
FW33-7019G5L__	—			44.4" [1128]	69.5" [1765]			XA-0752-G5-__		801.00 [363.33]
FW33-7019G6L__	—			56.6" [1438]	82.0" [2082]			XA-0752-G6-__		872.00 [395.53]
FW33-7019G7L__	—			68.8" [1748]	94.0" [2387]			XA-0752-G7-__		968.00 [439.08]

◊ For right-hand release fifth wheels, change "L" to "R" in part number.
* No longer available if replacement exists.
** See bracket section for more information.

 Amendments and errors reserved. © SAF-HOLLAND, Inc.



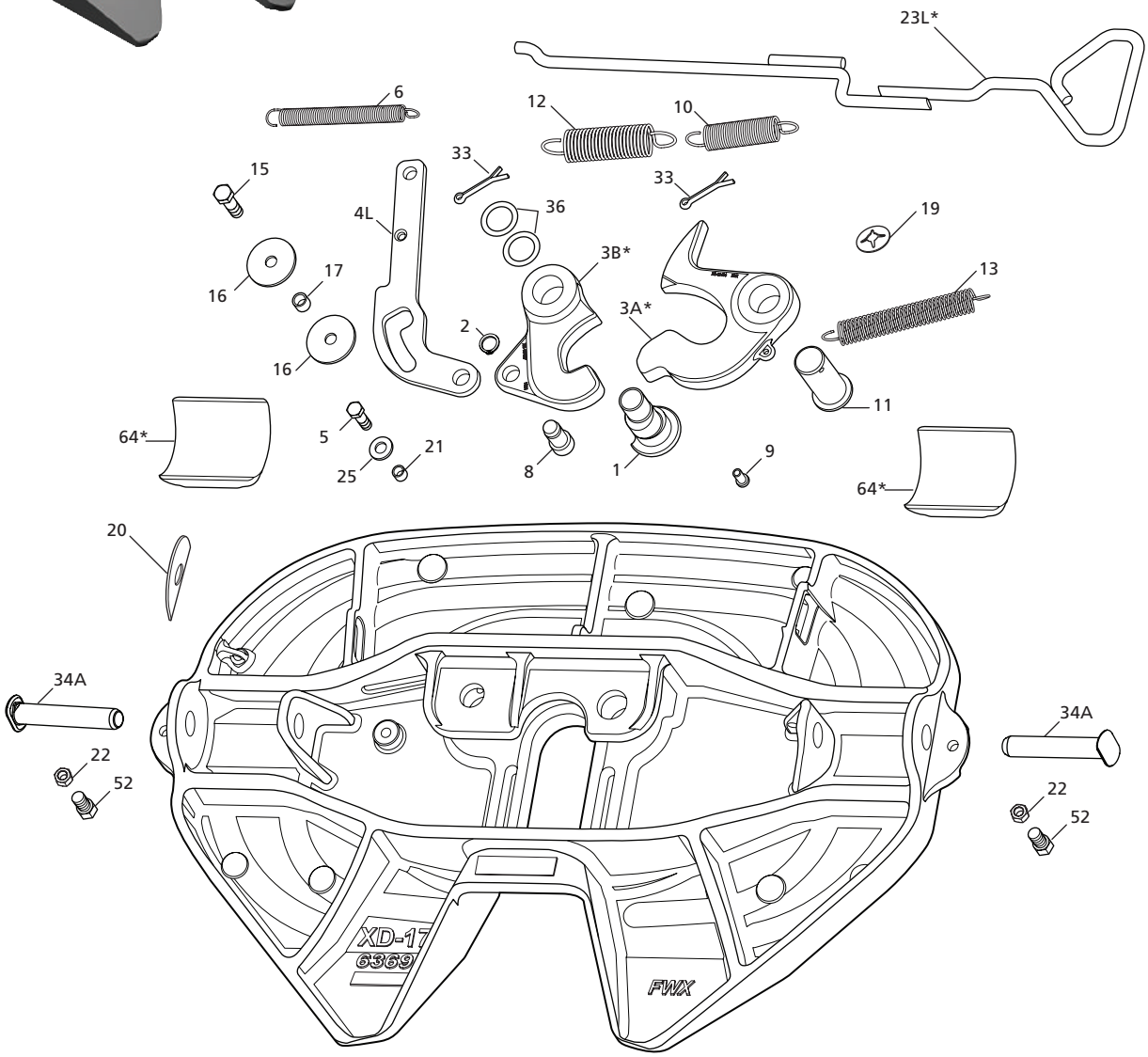

FOR AIR RELEASE MODELS

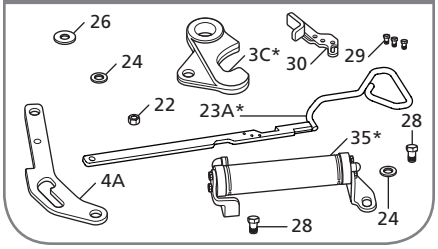

XL-FW10081PM-en-US Rev D 2016-03-01 Amendments and errors reserved. © SAF-HOLLAND, Inc.

FW17 PARTS LIST

ITEM	DESCRIPTION	PART NUMBER	QTY.	WEIGHT LBS [KG]
1	Pin, Adjusting	XA-10364-3-P	1	1.56 [0.71]
2	Ring, Retaining, .75" Dia.	XB-05855-1	1	0.01 [0.005]
3A*	Lock Jaw, See RK-171-11078 or RK-171-11078-AR	XA-10486	1	6.08 [2.76]
3B*	Hook, Manual Release, See RK-171-11078	XA-10487-P	1	4.40 [2.00]
3C*	Hook, Air Release, See RK-171-11078-AR	XA-10487-AR-P	1	4.41 [2.00]
4A	Release Cam, Air Release	XA-10483-A17	1	1.83 [0.83]
4L	Release Cam, Left-Hand Release	XA-10483	1	1.78 [0.81]
5	HHCS, .50"-20 x 1.50" GR 5 (Service Part Only)	XB-E-541	1	0.11 [0.05]
6	Spring, Extension, Release Cam	XB-10563	1	0.16 [0.07]
8	Pin, Hook	XA-10485-1	1	0.29 [0.13]
9	LHSCS, .38"-16 x .75" Long	XB-02724-1	1	0.04 [0.02]
10	Spring, Extension, Handle, Inner	XB-10489-P	1	0.23 [0.10]
11	Pin, Lock	XA-06344-P	1	1.43 [0.65]
12	Spring, Extension, Handle, Outer	XB-10490-P	1	0.32 [0.15]
13	Spring, Extension, Lock	XB-05843-1-P	1	0.16 [0.07]
15	HHCS, .50"-20 x 1.75" GR 5	XB-2083	1	0.13 [0.06]
16	Washer, .53" I.D. x 2.25" O.D., Stainless Steel	XB-10294	2	0.11 [0.05]
17	Roller, .50" I.D. x .68" O.D. x .53" Long	XA-10810-1	1	0.02 [0.01]
19	Push Retainer, .38" Dia. (Service Part Only)	XB-10614	1	0.01 [0.005]
20	Tag, Operation (Service Part Only)	XB-10424	1	N/A
21	Spacer (Service Part Only)	XA-09558-1	1	0.02 [0.01]
22	Lock Nut, .50"-20 GR C, Cam Plates, Bracket Pins	XB-T-69-A	2	0.04 [0.02]
	Air Release		1	0.04 [0.02]
23A*	Release Handle, Air Release, See RK-171-11384	XA-11384	1	3.25 [1.47]
23L*	Release Handle, Left-Hand, See RK-171-11079	XA-10495	1	2.75 [1.25]
24	Washer, .53" I.D. x 1.06" O.D., Hardened	XB-06378	2	0.02 [0.01]
25	Washer, .53" I.D. x 1.06" O.D.	XB-PW-1732-1-116	1	0.02 [0.01]
26	Washer, .69" I.D. x 1.31" O.D.	XB-06180	1	0.04 [0.02]
28	HHCS, .50"-20 x .75" GR 5	XB-6834	2	0.08 [0.04]
29	HHCS, .25"-20 x .88" GR 5	XB-10755	3	N/A
30	Pickup, Air Cylinder	XA-11384-3	1	0.46 [0.21]
33	Pin, Cotter, .25" Dia. x 2" Long	9900170	2	0.01 [0.005]
35*	Cylinder Assembly, Air, See RK-171-10999	XA-10999-A17	1	5.60 [2.54]
36	Ring, Shim	XB-05859-2	2	0.01 [0.005]
52	HHCS, .50"-20 x 1.25" GR 5	XB-C-95	2	0.11 [0.05]
64*	Pocket Insert, See RK-PKT-2	XD-08908	2	1.72 [0.78]

*Not sold individually - must be purchased in kit.

NOTE: See Accessories Section for Air Release Kits.

REPLACEMENT TOP PLATE PART NUMBERS

PART NUMBER	DESCRIPTION
XA-17-A-L-P	Left-Hand Release with Pins
XA-17-A-86-L-P	Air Release with Pins and Air Controls
XA-17-A-24-L-P	Left-Hand Release, Drilled and Tapped for Auto Lube

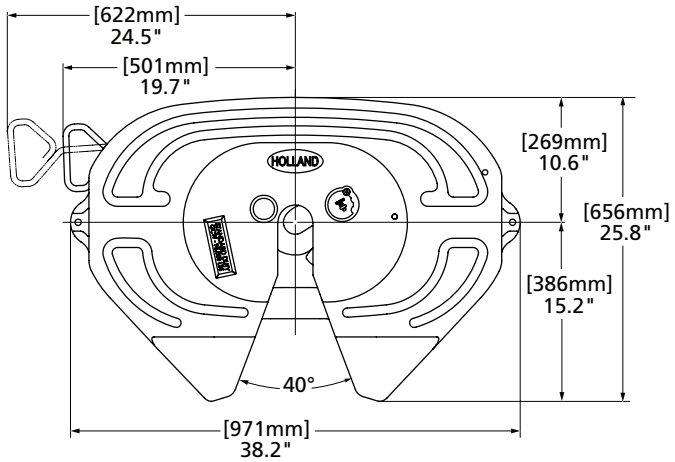

For XA-17 fifth wheel rebuild procedures, see Holland publication XL-FW441-01 at www.safholland.us

 Amendments and errors reserved. © SAF-HOLLAND, Inc.

SAF-HOLLAND Group

RK-171-11078
Lock, Standard

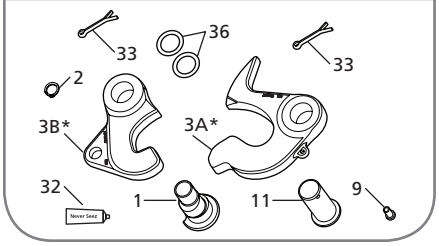

RK-171-11078-AR
Lock, Air

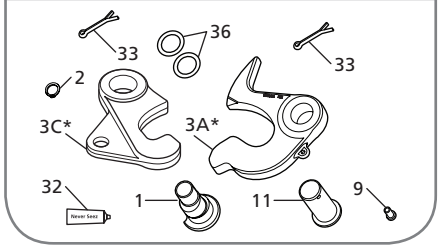

RK-171-108101
Cam Plate Pivot Bolt Hardware

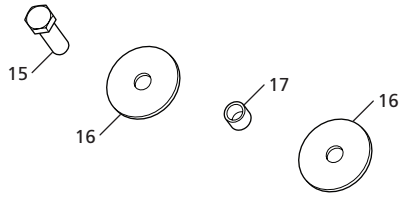

RK-171-10999
Air Cylinder

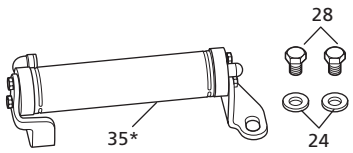

FW17 KIT PARTS LIST

ITEM	DESCRIPTION	PART NUMBER	QTY.	WEIGHT LBS [KG]
1	Pin, Adjusting	XA-10364-3-P	1	1.56 [0.71]
2	Retaining Ring, .75" Dia.	XB-05855-1	1	0.01 [0.005]
3A*	Lock Jaw	XA-10486	1	6.08 [2.76]
3B*	Hook, Manual Release	XA-10487-P	1	4.40 [2.00]
3C*	Hook, Air Release	XA-10487-AR-P	1	4.41 [2.00]
9	LHSCS, .38" -16 x .75" Long	XB-02724-1	1	0.04 [0.02]
11	Pin, Lock	XA-06344-P	1	1.43 [0.65]
15	HHCS, .50" -20 x 1.75" Gr 5	XB-2083	1	0.13 [0.06]
16	Washer, .53" I.D. x 2.25" O.D., Stainless Steel	XB-10294	2	0.11 [0.05]
17	Roller, .50" I.D. x .68" O.D. x .53" Long	XA-10810-1	1	0.02 [0.01]
24	Washer, .53" I.D. x 1.06" O.D., Hardened	XB-06378	2	0.02 [0.01]
28	HHCS, .50"-20 X .75" Gr 5	XB-6834	2	0.08 [0.04]
32	Never-Seez, 7.5g Tube	XB-02967	1	N/A
33	Pin, Cotter, .25" Dia. x 2" Long	9900170	2	0.01 [0.005]
35*	Cylinder Assembly, Air	XA-10999-A17	1	5.60 [2.54]
36	Ring, Shim	XB-05859-2	2	0.01 [0.005]

*Not sold individually - must be purchased in kit.

XL-FW10081PM-en-US Rev D 2016-03-01 Amendments and errors reserved. © SAF-HOLLAND, Inc.

RK-171-11079
Release Handle, Left-Hand

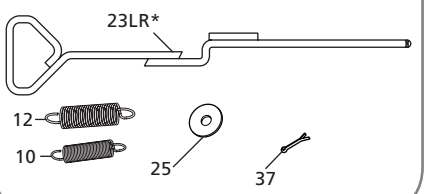

RK-171-11079-M
Release Handle, Left-Hand, XA-171-M Castings

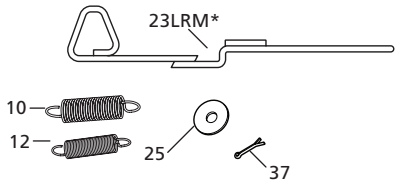

RK-171-11384
Release Handle, Air Release

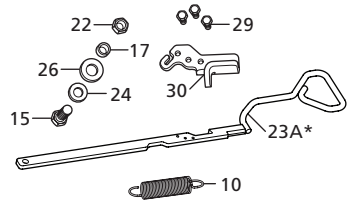

RK-PKT-2
Pocket Inserts

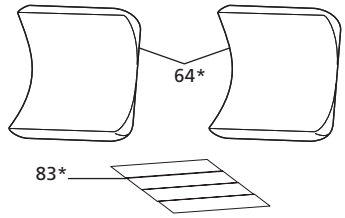

RK-06973-1
Bracket Pins and Cushions

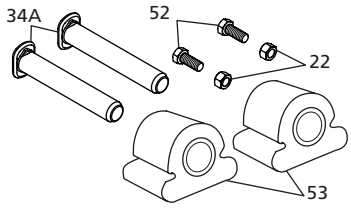

RK-10605
Bracket Pins and Bushings, ILS

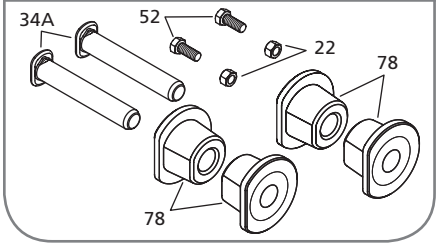

FW17 KIT PARTS LIST

ITEM	DESCRIPTION	PART NUMBER	QTY.	WEIGHT LBS [KG]
10	Spring, Extension, Handle, Inner	XB-10489-P	1	0.23 [0.10]
12	Spring, Extension, Handle, Outer	XB-10490-P	1	0.32 [0.15]
15	HHCS, .50"-20 x 1.75" Gr 5	XB-2083	1	0.13 [0.06]
17	Roller, .50" I.D. x .68" O.D. x .53 Long	XA-10810-1	1	0.02 [0.01]
22	Lock Nut, .50" -20 Gr C, Release Handle, Air	XB-T-69-A	1	0.04 [0.02]
	Lock Nut, .50" -20 Gr C, Bracket Pins Kits		2	0.04 [0.02]
23A*	Release Handle, Air Release	XA-11384	1	3.25 [1.47]
23LR*	Release Handle, Left-Hand	XA-10495-RP	1	2.72 [1.23]
23LRM*	Release Handle, Left-Hand	XA-10495-RP-M-P	1	2.61 [1.18]
24	Washer, .53" I.D. x 1.06" O.D., Hardened, Air Release Handle	XB-06378	1	0.02 [0.01]
25	Washer, .53" I.D. x 1.06" O.D.	XB-PW-1732-1-116	1	0.02 [0.01]
26	Washer, .69" I.D. x 1.31" O.D.	XB-06180	1	0.04 [0.02]
29	HHCS, .25" -20 X .88" Gr 5	XB-10775	3	0.02 [0.01]
30	Pickup, Air Cylinder	XA-11384-3	1	0.46 [0.21]
34A	Pin, Bracket	XE-06356-P	2	1.98 [0.90]
37	Pin, Cotter, .13" Dia. x 1" Long	XB-16	1	0.01 [0.005]
52	HHCS, .50" -20 x 1.25" Gr 5	XB-C-95	2	0.11 [0.05]
53	Cushion, Rubber	XB-0011-2	2	0.60 [0.27]
64*	Pocket Insert	XD-08908	2	1.72 [0.78]
78	Cushion,Rubber, ILS	XB-10605	4	0.39 [0.18]
83*	Tape, Double Back	XB-09422	4	0.01 [0.005]

*Not sold individually - must be purchased in kit.

 Amendments and errors reserved. © SAF-HOLLAND, Inc.

RK-17-A-L
Complete Rebuild, Left-Hand Release

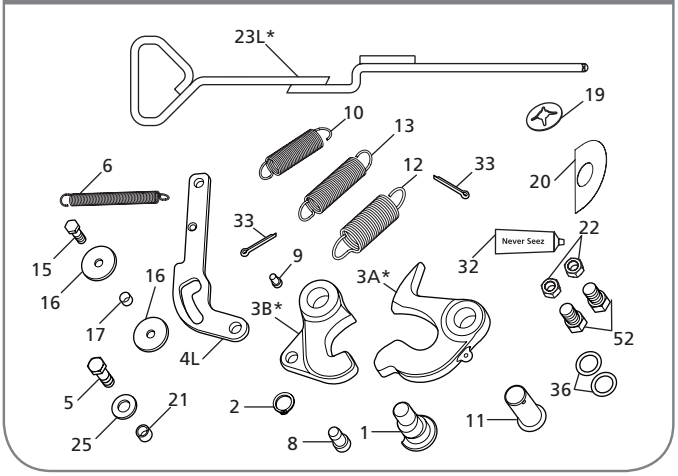

RK-17-A-80-L
Complete Rebuild, Air Release

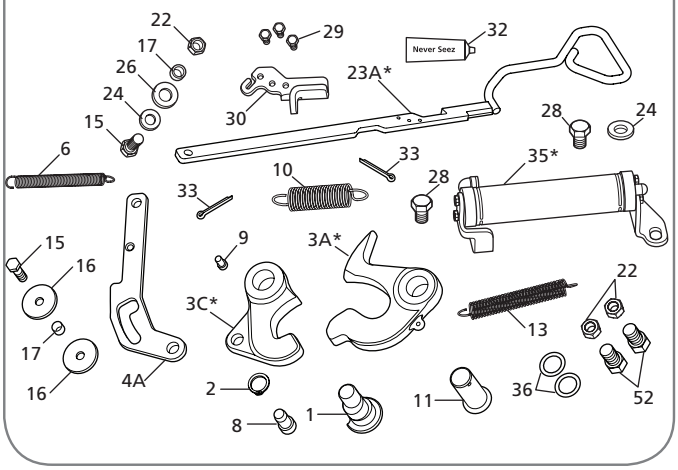

FW17 KIT PARTS LIST

ITEM	DESCRIPTION	PART NUMBER	QTY.	WEIGHT LBS [KG]
1	Pin, Adjusting	XA-10364-3-P	1	1.56 [0.71]
2	Retaining Ring, .75" Dia.	XB-05855-1	1	0.01 [0.005]
3A*	Lock Jaw, See RK-171-11078 or RK-171-11078-AR	XA-10486	1	6.08 [2.76]
3B*	Hook, Manual Release, See RK-171-11078	XA-10487-P	1	4.40 [2.00]
3C*	Hook, Air Release, See RK-171-11078-AR	XA-10487-AR-P	1	4.41 [2.00]
4A	Release Cam, Air Release	XA-10483-A17	1	1.83 [0.83]
4L	Release Cam, Left-Hand Release	XA-10483	1	1.78 [0.81]
5	HHCS, .50" -20 x 1.50" Gr 5 (Service Part Only)	XB-E-541	1	0.11 [0.05]
6	Spring, Extension, Release Cam	XB-10563	1	0.16 [0.07]
8	Pin, Hook	XA-10485-1	1	0.29 [0.13]
9	LHSCS, .38" -16 x .75" Long	XB-02724-1	1	0.04 [0.02]
10	Spring, Extension, Handle, Inner	XB-10489-P	1	0.23 [0.10]
11	Pin, Lock	XA-06344-P	1	1.43 [0.65]
12	Spring, Extension, Handle, Outer	XB-10490-P	1	0.32 [0.15]
13	Spring, Extension	XB-05843-1-P	1	0.16 [0.07]
15	HHCS, .50" -20 x 1.75" Gr 5, Left Hand Release	XB-2083	1	0.13 [0.06]
	HHCS, .50" -20 x 1.75" Gr 5, Air Release		2	0.13 [0.06]
16	Washer, .53" I.D. x 2.25" O.D., Stainless Steel	XB-10294	2	0.11 [0.05]
17	Roller, .50" I.D. x .68" O.D. x .53" Long, Left Hand Release	XA-10810-1	1	0.02 [0.01]
	Roller, .50" I.D. x .68" O.D. x .53" Long, Air Release		2	0.02 [0.01]
19	Push Retainer, .38" Dia. (Service Part Only)	XB-10614	1	0.01 [0.005]
20	Tag, Operation (Service Part Only)	XB-10424	1	N/A
21	Spacer, Service Part Only	XA-09558-1	1	0.02 [0.01]

FW17 KIT PARTS LIST

ITEM	DESCRIPTION	PART NUMBER	QTY.	WEIGHT LBS [KG]
22	Lock Nut, .50" -20 Gr C, Left Hand Release	XB-T-69-A	2	0.04 [0.02]
	Lock Nut, .50" -20 Gr C, Air Release		3	0.04 [0.02]
23A*	Release Handle, Air Release, See RK-171-11384	XA-11384	1	3.25 [1.47]
23L*	Release Handle, Left-Hand, See RK-171-11079	XA-10495	1	2.75 [1.25]
24	Washer, .53" I.D. x 1.06" O.D., Hardened	XB-06378	2	0.02 [0.01]
25	Washer, .53" I.D. x 1.06" O.D.	XB-PW-1732-1-116	1	0.02 [0.01]
26	Washer, .69" I.D. x 1.31" O.D.	XB-06180	1	0.04 [0.02]
28	HHCS, .50" -20 X .75" Gr 5	XB-6834	2	0.08 [0.04]
29	HHCS, .25" -20 X .88" Gr 5	XB-11026	3	0.02 [0.01]
30	Pickup, Air Cylinder	XA-11384-3	1	0.46 [0.21]
32	Never-Seez, 7.5g Tube	XB-02967	1	N/A
33	Pin, Cotter, .25" Dia. x 2" Long	9900170	2	0.01 [0.005]
35*	Cylinder Assembly, Air, See RK-171-10999	XA-10999-A17	1	5.60 [2.54]
36	Ring, Shim	XB-05859-2	2	0.01 [0.005]
52	HHCS, .50" -20 x 1.25" Gr 5	XB-C-95	2	0.11 [0.05]

*Not sold individually - must be purchased in kit.

XL-FW10081PM-en-US Rev D 2016-03-01 Amendments and errors reserved. © SAF-HOLLAND, Inc.

THIS PAGE INTENTIONALLY LEFT BLANK

 Amendments and errors reserved. © SAF-HOLLAND, Inc.

SAF-HOLLAND Group

ILS Style Fifth Wheel Assembly Part Numbers

General Holland prefix indicating complete fifth wheel assembly

SERIES	
17	FW17 Series

MOUNTING STYLE	
NO.	DESCRIPTION
Standard Duty Sliders	
A	Outboard (1 pc tie-bar)
B	Inboard (Serrated 3 pc tie-bar)
C	Inboard (Straight 3 pc tie-bar) (DTNA Air Fitting)
F	Outboard (1 pc tie-bar)
H	Inboard (1 pc tie-bar for PACCAR)
J	Outboard (1 pc tie-bar for PACCAR)
Standard Duty Stationaries	
Z	Integrated Plate Mount
Y	Foot Mount
X	Bracket Castings Only (No Angle or Base Plate)
W	Brackets w/4" Vert. Leg Angle
Specialty Mounting Systems	
K	Kompensator
N	No-Tilt

HEIGHT (approx.)	
NO.	DESCRIPTION
6	6" (Stationary only)
7	7"
8	8"
9	9"
0	10"
1	11" (Komp only)
2	12.0" [305] (Komp only)
3	13" (Komp only)

FW 17 X X XX X X XX

TRAVEL	
NO.	DESCRIPTION
00	Stationary
ILS Travel	
12	12"
18	18" (Only H & J) Mounting Style
24	24"
36	36"
48	48"
No-Tilt ILS Travel	
06	6"
18	18"
30	30"
42	42"
Kompensator Travel	
11	11"
17	17"
24	24"
41	41"
54	54"
66	66"

ANGLES	
NO.	DESCRIPTION
No Angle Mounting Systems	
W	Aftermarket Inboard No-Tilt & Komp (Serrated Edge)
X	Outboard Slider ***or*** Inboard Slider w/o Angles ***or*** Stationary w/o Angles
Y	Outboard No-Tilt & Komp
Z	OEM Inboard No-Tilt & Komp (straight edge)
Frame Width for Standard Duty Mounting Angles	
A	33.25"
B	33.38"
C	33.50"
D	33.62"
E	33.75
F	33.88"
G	34.00"
H	34.12"
J	34.25"
K	34.38"
L	34.50"

RELEASE HANDLE	
NO.	DESCRIPTION
L	Left-hand (Road-side)
R	Right-hand (Curb-side)

OPTION CODE*	
NO.	DESCRIPTION
00	No option
02	Manual Secondary Lock
24	Drilled & Tapped for Auto Lube
28	Dolly Release Handle
80	Air Release Top Plate
EL	Electronic Lock Indicator (ELI)
EA	ELI w/ Air Release Top Plate
8E	ELI w/Air Release Top Plate (PACCAR only)

XL-FW10081PM-en-US Rev D 2016-03-01 Amendments and errors reserved. © SAF-HOLLAND, Inc.

Traditional Style Stationary Fifth Wheel Assembly Part Numbers

General Holland prefix indicating complete fifth wheel assembly

SERIES	
17	FW17 Series

FRAME WIDTH			
LETTER	WIDTH	LETTER	WIDTH
X	No Angle	F	34.04"
A	33.41"	G	34.16"
B	33.54"	H	34.28"
C	33.66"	J	34.41"
D	33.78"	K	34.54"
E	33.91"	L	34.66"

RELEASE HANDLE	
NO.	DESCRIPTION
L	Left-hand (Road-side)
R	Right-hand (Curb-side)

FW 17 XXXX X X X XX

MOUNTING STYLE			
NO.	HEIGHT	NO.	HEIGHT
Foot Mount		*Bracket with Angle*	
7801	8.7"	7811	8.7"
7802	7.7"	7812	7.7"
7803	6.7"	7813	6.7"
7804	5.7"	7814	5.7"
Integrated Plate		*Bracket for Angle*	
7883	8.6"	7821	8.3"
8774	7.6"	7822	7.3"
7885	6.6"	7823	6.3"
7886	5.6"	7824	5.3"

SLIDE TRAVEL	
NO.	DESCRIPTION
1	12.2"
2	18.4"
3	24.5"
4	36.7"
5	48.9"

OPTION CODE*	
NO.	DESCRIPTION
BLANK	No option
02	Manual Secondary Lock
24	Drilled & Tapped for Auto Lube
Other Options Available	

Traditional Style Sliding Fifth Wheel Assembly Part Numbers

General Holland prefix indicating complete fifth wheel assembly

SERIES	
17	FW17 Series

FRAME WIDTH			
LETTER	WIDTH	LETTER	WIDTH
X	No Angle	G	34.16"
A	33.41"	H	34.28"
B	33.54"	J	34.41"
C	33.66"	K	34.54"
D	33.78"	L	34.66"
E	33.91"	*Outboard*	
F	34.04"	T	Angles not Included

RELEASE HANDLE	
NO.	DESCRIPTION
L	Left-hand (Road-side)
R	Right-hand (Curb-side)

FW 17 XXXX X X X XX

MOUNTING STYLE			
NO.	HEIGHT	NO.	HEIGHT
Over the Frame		*Outboard*	
7001	8.63"	8001	8.63"
7002	7.63"	8002	7.63"
7003	6.63"	8003	6.63"

SLIDE TRAVEL	
NO.	DESCRIPTION
1	12.2"
2	18.4"
3	24.5"
4	36.7"
5	48.9"

OPTION CODE*	
NO.	DESCRIPTION
BLANK	No option
02	Manual Secondary Lock
24	Drilled & Tapped for Auto Lube
Other Options Available	

 Amendments and errors reserved. © SAF-HOLLAND, Inc.

SAF-HOLLAND Group

FW17 Stationary Foot Mount



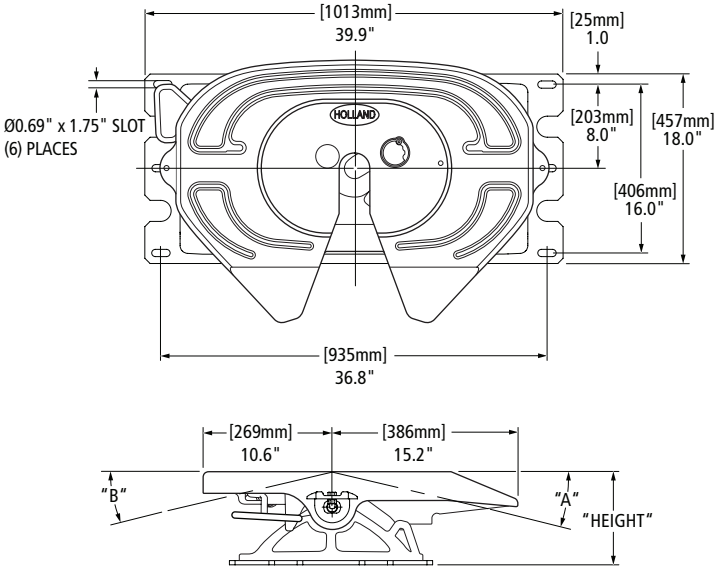

STANDARD OPTION CODES Replaces the Underscore (__) on the new and legacy part number.			
CODE	DESCRIPTION	CODE	DESCRIPTION
00 / Blank	Standard, No Other Options.	24	Drilled and Tapped for Auto Lube
01	Mounting Plate*	80	Air Release, OEM Replacement, Left-Hand Only
02	Manual Secondary Lock	86	Air Release, Aftermarket Installations, Left Hand Only

* Corrugated Plate Option adds 0.9" to height.

FW PART NUMBER (CAST BRACKET)	LEGACY FW PART NUMBER (FABRICATED BRACKET)*	HEIGHT IN [MM]	A	B	REPLACEMENT BRACKETS**	FW WEIGHT LBS [KG]
FW17Y600XL__	FW17-7804XL__	5.8" [147]	8°	8°	RK-Y600	273.00 [123.83]
FW17Y700XL__	FW17-7803XL__	6.8" [173]	11°	11°	RK-Y700	279.00 [126.55]
FW17Y800XL__	FW17-7802XL__	7.8" [198]	14°	14°	RK-Y800	284.00 [128.82]
FW17Y900XL__	FW17-7801XL__	8.8" [224]	17°	17°	RK-Y900	289.00 [131.09]

*No Longer Available.
** See bracket section for more information.

NOTE: A flat or corrugated mounting plate is required for foot mount brackets.

FW17 Stationary Integrated Plate Mount



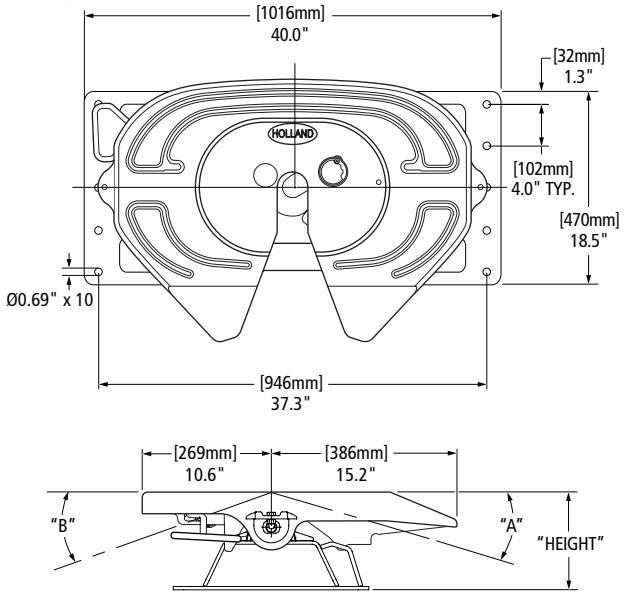

STANDARD OPTION CODES Replaces the Underscore (__) on the new and legacy part number.			
CODE	DESCRIPTION	CODE	DESCRIPTION
00 / Blank	Standard, No Other Options.	80	Air Release, OEM Replacement, Left-Hand Only
02	Manual Secondary Lock	86	Air Release, Aftermarket Installations, Air Controls Module Included. See pg 120.
24	Drilled and Tapped for Auto Lube		

FW PART NUMBER (CAST BRACKET)	LEGACY FW PART NUMBER (FABRICATED BRACKET)*	HEIGHT IN [MM]	A	B	REPLACEMENT BRACKETS**	FW WEIGHT LBS [KG]
FW17Z600XL__	FW17-7886XL__	5.8" [147]	8°	8°	RK-Z600	287.00 [130.18]
FW17Z700XL__	FW17-7885XL__	6.8" [173]	11°	11°	RK-Z700	295.00 [133.81]
FW17Z800XL__	FW17-7884XL__	7.8" [198]	14°	14°	RK-Z800	302.00 [136.98]
FW17Z900XL__	FW17-7883XL__	8.8" [224]	17°	17°	RK-Z900	298.00 [135.17]

* No Longer Available
** See bracket section for more information.

XL-FW10081PM-en-US Rev D 2016-03-01 Amendments and errors reserved. © SAF-HOLLAND, Inc.

FW17 Stationary Brackets for Angle Mounting

Also Available With Angle Later In This Section.



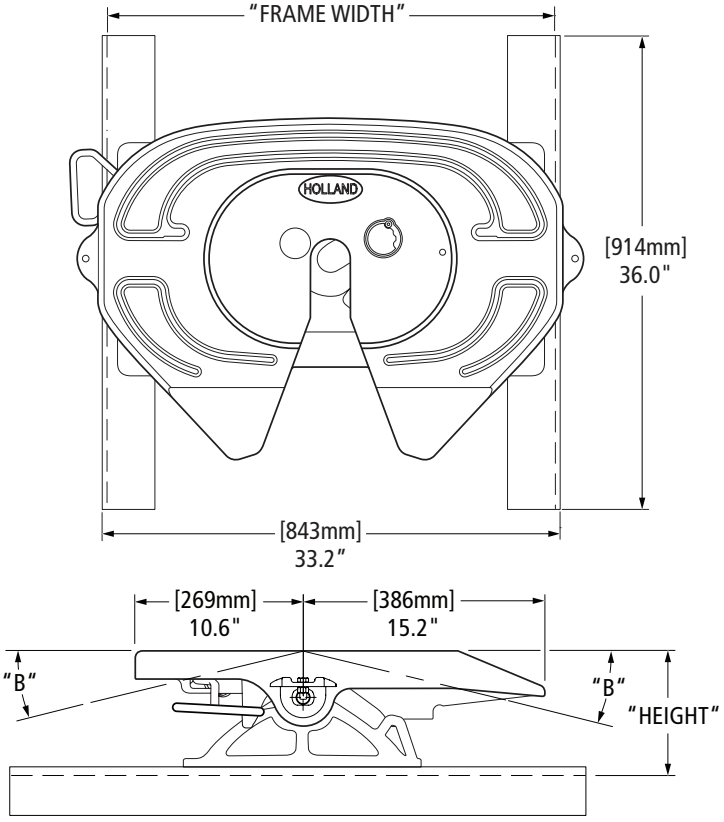

FW PART NUMBER (CAST BRACKET)	LEGACY FW PART NUMBER (FABRICATED BRACKET)*	HEIGHT IN [MM]	A	B	REPLACEMENT BRACKETS**	FW WEIGHT LBS [KG]
FW17X600XL__	FW17-7824XL__	5.4" [137]	8°	8°	RK-X600	244.00 [110.68]
FW17X700XL__	FW17-7823XL__	6.4" [163]	11°	11°	RK-X700	250.00 [113.40]
FW17X800XL__	FW17-7822XL__	7.4" [188]	14°	14°	RK-X800	254.00 [115.21]
FW17X900XL__	FW17-7821XL__	8.4" [213]	17°	17°	RK-X900	260.00 [117.93]

*No Longer Available.
** See bracket section for more information.

STANDARD OPTION CODES Replaces the Underscore (__) on the new and legacy part number.	
NUMBER CODE	DESCRIPTION
00 / Blank	Standard, No Other Options.
24	Drilled and Tapped for Auto Lube
80	Air Release, OEM Replacement, Left-Hand Only
86	Air Release, Aftermarket Installations, See pg 120

 Amendments and errors reserved. © SAF-HOLLAND, Inc.

FW17 Sliding ILS Outboard Mount



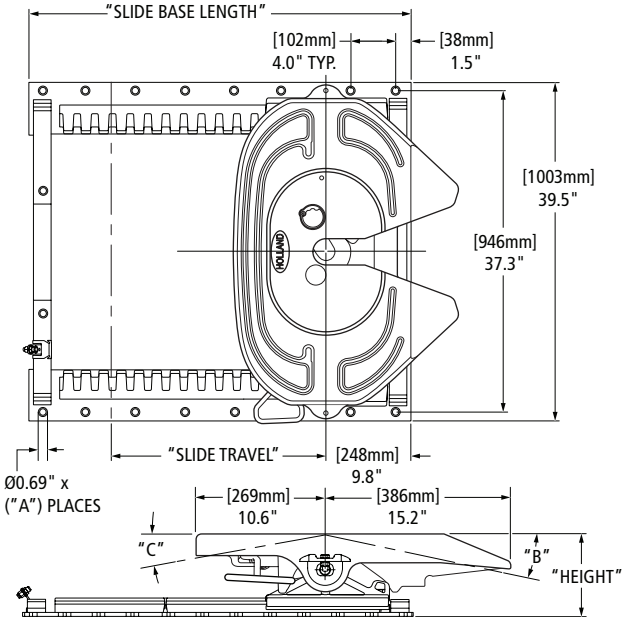

STANDARD OPTION CODES Replaces the Underscore (__) on the new and legacy part number.	
NUMBER CODE	**DESCRIPTION**
00 / Blank	Standard, No Other Options
02	Manual Secondary Lock
24	Drilled and Tapped for Auto Lube
80	Air Release, OEM Replacement, Left-Hand Only
86	Air Release, New Installations, See page 120

ILS FW PART NUMBER	LEGACY		HEIGHT IN [MM]	SLIDE TRAVEL IN [MM]	SLIDE BASE LENGTH IN [MM]	A # OF HOLES	B	C	REPLACEMENT SLIDE BASE AND BRACKET**	REPLACEMENT SLIDE BASE**	REPLACEMENT BRACKET**	FW WEIGHT LBS [KG]
	TRADITIONAL PART NUMBER (AIR RELEASE)*	TRADITIONAL PART NUMBER (MANUAL RELEASE)*										
FW17A712XL__	FW17-8003T1L__	FW17-8013T1L__	6.8" [173]	12" [305]	31" [787]	16	8°	8°	XA-A712	XA-A12	RK-10689-1	392.00 [177.81]
FW17A724XL__	FW17-8003T3L__	FW17-8013T3L__		24" [610]	43" [1092]	22			XA-A724	XA-A24		425.00 [192.78]
FW17A736XL__	FW17-8003T4L__	FW17-8013T4L__		36" [914]	55" [1397]	28			XA-A736	XA-A36		459.00 [208.20]
FW17A748XL__	FW17-8003T5L__	FW17-8013T5L__		48" [1219]	67" [1702]	34			XA-A748	XA-A48		493.00 [223.62]
FW17A812XL__	FW17-8002T1L__	FW17-8012T1L__	7.8" [198]	12" [305]	31" [787]	16	12°	10°	XA-A812	XA-A12	RK-10689-2	397.00 [180.08]
FW17A824XL__	FW17-8002T3L__	FW17-8012T3L__		24" [610]	43" [1092]	22			XA-A824	XA-A24		430.00 [195.04]
FW17A836XL__	FW17-8002T4L__	FW17-8012T4L__		36" [914]	55" [1397]	28			XA-A836	XA-A36		464.00 [210.47]
FW17A848XL__	FW17-8002T5L__	FW17-8012T5L__		48" [1219]	67" [1702]	34			XA-A848	XA-A48		497.00 [225.44]
FW17A912XL__	FW17-8001T1L__	FW17-8011T1L__	8.8" [224]	12" [305]	31" [787]	16	15°	12°	XA-A912	XA-A12	RK-10689-3	400.00 [181.44]
FW17A924XL__	FW17-8001T3L__	FW17-8011T3L__		24" [610]	43" [1092]	22			XA-A924	XA-A24		434.00 [196.86]
FW17A936XL__	FW17-8001T4L__	FW17-8011T4L__		36" [914]	55" [1397]	28			XA-A936	XA-A36		468.00 [212.28]
FW17A948XL__	FW17-8001T5L__	FW17-8011T5L__		48" [1219]	67" [1702]	34			XA-A948	XA-A48		501.00 [227.25]

* No longer available
** See bracket section for more information.

XL-FW10081PM-en-US Rev D 2016-03-01 Amendments and errors reserved. © SAF-HOLLAND, Inc.

FW17 Sliding ILS Inboard Mount for Angle

Also Available With Angle Later In This Section.



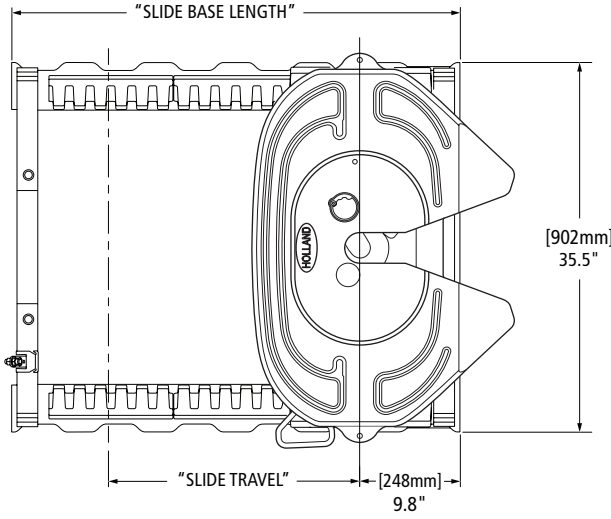

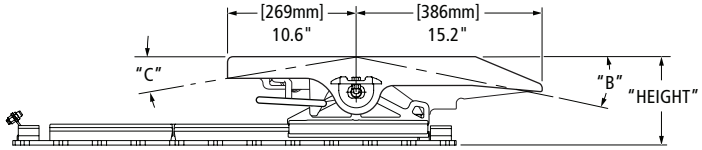

STANDARD OPTION CODES Replaces the Underscore (__) on the new and legacy part number.	
NUMBER CODE	**DESCRIPTION**
00 / Blank	Standard, No Other Options
02	Manual Secondary Lock
24	Drilled and Tapped for Auto Lube
80	Air Release, OEM Replacement, Left-Hand Only
86	Air Release, New Installations, See pg 120

ILS FW PART NUMBER	LEGACY		HEIGHT IN [MM]	SLIDE TRAVEL IN [MM]	SLIDE BASE LENGTH IN [MM]	B	C	REPLACEMENT SLIDE BASE AND BRACKET**	REPLACEMENT SLIDE BASE**	REPLACEMENT BRACKETS**	FW WEIGHT LBS [KG]
	TRADITIONAL PART NUMBER (AIR RELEASE)*	TRADITIONAL PART NUMBER (MANUAL RELEASE)◊									
FW17B712XL__	FW17-7003X1L__	FW17-7013X1L__	6.8" [173]	12" [305]	31" [787]	8°	8°	XA-B712	XA-B12	RK-10689-1	378.00 [171.46]
FW17B724XL__	FW17-7003X2L__	FW17-7013X2L__		24" [610]	43" [1092]			XB-B724	XA-B24		405.00 [183.70]
FW17B736XL__	FW17-7003X4L__	FW17-7013X4L__		36" [914]	55" [1397]			XA-B736	XA-B36		436.00 [197.77]
FW17B748XL__	FW17-7003X5L__	FW17-7013X5L__		48" [1219]	67" [1702]			XA-B748	XA-B48		461.00 [209.11]
FW17B812XL__	FW17-7002X1L__	FW17-7012X1L__	7.8" [198]	12" [305]	31" [787]	12°	10°	XA-B812	XA-B12	RK-10689-2	382.00 [173.27]
FW17B824XL__	FW17-7002X2L__	FW17-7012X2L__		24" [610]	43" [1092]			XA-B824	XA-B24		409.00 [185.52]
FW17B836XL__	FW17-7002X4L__	FW17-7012X4L__		36" [914]	55" [1397]			XA-B836	XA-B36		438.00 [198.67]
FW17B848XL__	FW17-7002X5L__	FW17-7012X5L__		48" [1219]	67" [1702]			XA-B848	XA-B48		466.00 [211.37]
FW17B912XL__	FW17-7001X1L__	FW17-7011X1L__	8.8" [224]	12" [305]	31" [787]	15°	12°	XA-B912	XA-B12	RK-10689-3	386.00 [175.09]
FW17B924XL__	FW17-7001X2L__	FW17-7011X2L__		24" [610]	43" [1092]			XA-B924	XA-B24		414.00 [187.79]
FW17B936XL__	FW17-7001X4L__	FW17-7011X4L__		36" [914]	55" [1397]			XA-B936	XA-B36		442.00 [200.49]
FW17B948XL__	FW17-7001X5L__	FW17-7011X5L__		48" [1219]	67" [1702]			XA-B948	XA-B48		470.00 [213.19]

* No longer available
** See bracket section for more information.

 Amendments and errors reserved. © SAF-HOLLAND, Inc.

FW17 Sliding Traditional Outboard Mount

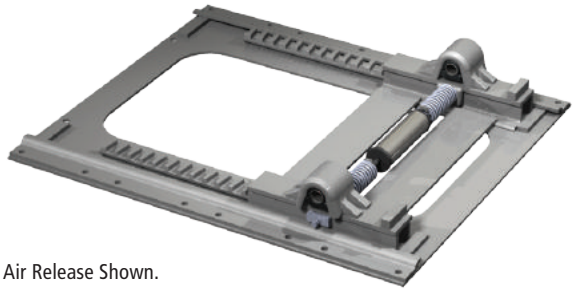

Air Release Shown.

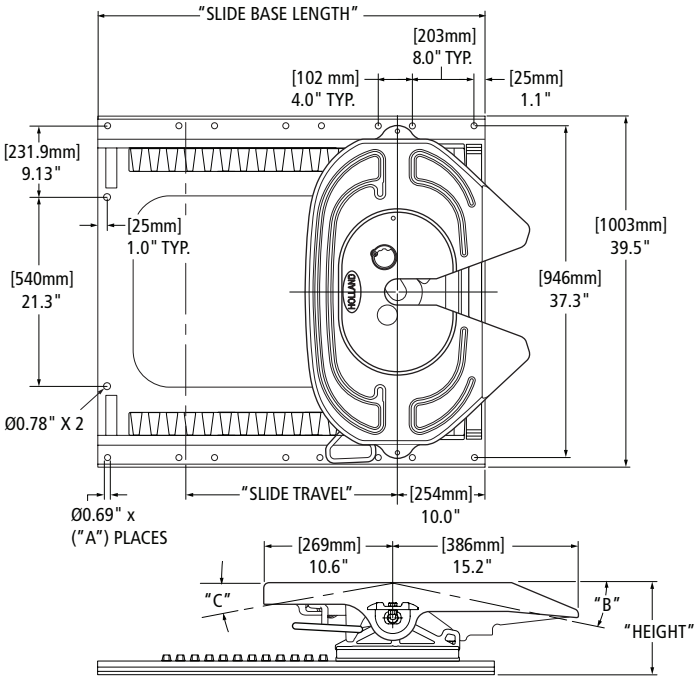

STANDARD OPTION CODES Replaces the Underscore (__) on the new and legacy part number.	
NUMBER CODE	DESCRIPTION
00 / Blank	Standard, No Other Options
0G	Plunger Dip Control

LEGACY FW PART NUMBER*	REPLACED BY ILS FW PART NUMBER	SLIDE BRACKET TYPE	HEIGHT IN [MM]	SLIDE TRAVEL IN [MM]	SLIDE BASE LENGTH IN [MM]	A # OF HOLES	B	C	REPLACEMENT SLIDE BASE AND BRACKET**	REPLACEMENT SLIDE BASE**	REPLACEMENT BRACKETS**	FW WEIGHT LBS [KG]
FW17-8003T1L__	FW17A712XL__	Air Release	6.7" [170]	10.7" [272]	42.2" [1072]	16	10°	10°	—	XA-07871-1L	XA-7003-1	463.00 [210.01]
FW17-8003T2L__	FW17A724XL__			16.8" [427]	50.2" [1275]	18			—	XA-07871-2L		486.00 [220.45]
FW17-8003T3L__	FW17A724XL__			24.5" [622]	55.2" [1402]	20			—	XA-07871-3L		506.00 [229.52]
FW17-8003T4L__	FW17A736XL__			41.3" [1049]	74.2" [1885]	26			—	XA-07871-4L		566.00 [256.73]
FW17-8002T1L__	FW17A812XL__		7.7" [196]	12.2" [310]	34.2" [869]	12	12°	15°	—	XA-07871-1	XA-7002	423.00 [191.87]
FW17-8002T2L__	FW17A824XL__			18.4" [467]	42.2" [1072]	16			—	XA-07871-2		449.00 [203.66]
FW17-8002T3L__	FW17A824XL__			24.5" [622]	46.2" [1173]	16			—	XA-07871-3		462.00 [209.56]
FW17-8002T4L__	FW17A836XL__			36.7" [932]	58.2" [1478]	20			—	XA-07871-4		502.00 [227.70]
FW17-8001T1L__	FW17A912XL__		8.8" [224]	12.2" [310]	34.2" [869]	12	18°	15°	—	XA-07871-1	XA-7001	428.00 [194.14]
FW17-8001T2L__	FW17A924XL__			18.4" [467]	42.2" [1072]	16			—	XA-07871-2		454.00 [205.93]
FW17-8001T3L__	FW17A924XL__			24.5" [622]	46.2" [1173]	16			—	XA-07871-3		468.00 [212.28]
FW17-8001T4L__	FW17A936XL__			36.7" [932]	58.2" [1478]	20			—	XA-07871-4		508.00 [230.42]
FW17-8009T2L__	—		10.3" [262]	13.8" [351]	42.2" [1072]	16	18°	15°	XA-8301-T1	XA-07871-2	XA-7009	488.00 [221.35]
FW17-8009T4L__	—			32.1" [815]	58.2" [1478]	20			XA-8301-T3	XA-07871-4		542.00 [245.85]
FW17-8013T3L__	FW17A724XL__	Manual Release	6.7" [170]	24.5" [622]	55.2" [1402]	20	10°	10°	—	XA-07871-3L	XA-7013	505.00 [229.06]

* No longer available if replacement exists.
** See bracket section for more information.

XL-FW10081PM-en-US Rev D 2016-03-01 Amendments and errors reserved. © SAF-HOLLAND, Inc.

FW17 Sliding Traditional Inboard for Angle Mount

Also Available With Angle Later In This Section.

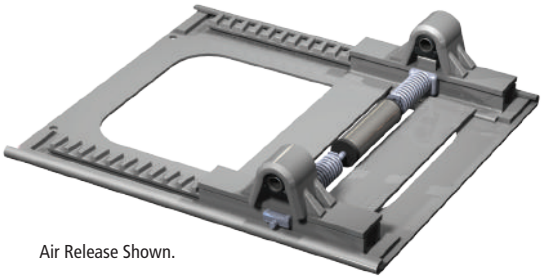

Air Release Shown.

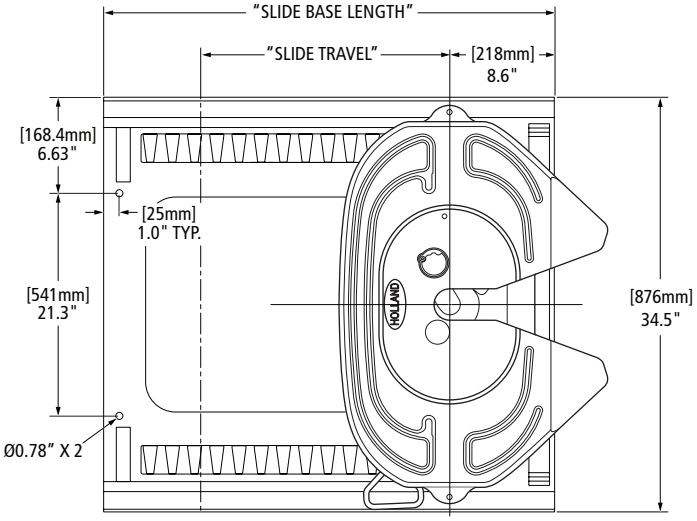

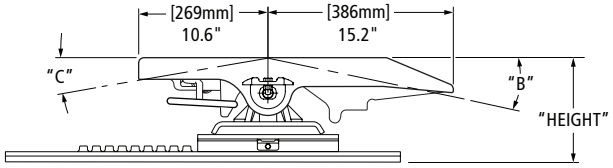

STANDARD OPTION CODES Replaces the Underscore (__) on the new and legacy part number.	
NUMBER CODE	DESCRIPTION
00 / Blank	Standard, No Other Options
80	Air Release, OEM Replacement, Left-Hand Only
86	Air Release, Aftermarket Installations, Air Control Modules Included, Left-Hand Only

LEGACY FW PART NUMBER*	REPLACED BY ILS FW PART NUMBER	SLIDE BRACKET TYPE	HEIGHT IN [MM]	SLIDE TRAVEL IN [MM]	SLIDE BASE LENGTH IN [MM]	B	C	REPLACEMENT SLIDE BASE AND BRACKET**	REPLACEMENT SLIDE BASE**	REPLACEMENT BRACKETS**	FW WEIGHT LBS [KG]
FW17-7003X1L__	FW17B712XL__	Air Release	6.8" [173]	10.7" [272	38.9" [988]	10°	10°	—	XA-0751-1	XA-7003-1	425.00 [192.78]
FW17-7003X2L__	FW17B724XL__			16.8" [427]	45.0" [1143]			—	XA-0751-2		439.00 [199.13]
FW17-7003X3L__	FW17B724XL__			24.5" [622]	52.6" [1336]			—	XA-0751-3A		459.00 [208.20]
FW17-7003X4L__	FW17B736XL__			41.3" [1049]	69.5" [1765]			—	XA-0751-4		502.00 [227.70]

* No longer available if replacement exists.
** See bracket section for more information.

 Amendments and errors reserved. © SAF-HOLLAND, Inc.

FW17 Stationary Brackets with Angle Mount



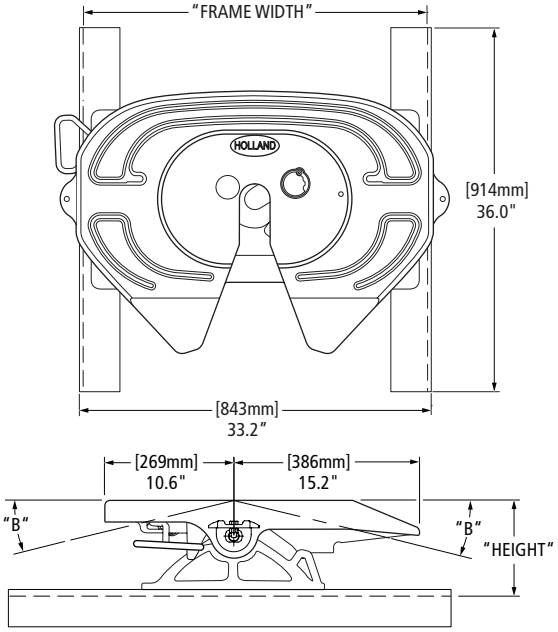

Frame width "A-G": .38" x 4" x 4" angle
"H-N": .38" x 4" x 6" angle

STANDARD OPTION CODES Replaces the Underscore (__) on the new and legacy part number.	
NUMBER CODE	DESCRIPTION
00 / Blank	Standard, No Other Options
24	Drilled and Tapped for Auto Lube
80	Air Release, OEM Replacement, Left-Hand Only
86	Air Release, New installations, Left-Hand Only, See pg 120

FRAME WIDTH CODE CHART					
CODE	FRAME WIDTH	CODE	FRAME WIDTH	CODE	FRAME WIDTH
A	33.25"	F	33.88"	L	34.50"
B	33.38"	G†	34.00"	M	34.62"
C	33.50"	H	34.12"	N	34.75"
D	33.62"	J	34.25"		
E	33.75"	K	34.38"		

† Standard

FW PART NUMBER CAST BRACKET	FW PART NUMBER FABRICATED*	FRAME WIDTH IN [MM]	HEIGHT IN [MM]	B	REPLACEMENT BRACKETS**	FW WEIGHT LBS [KG]
FW17W600GL__	FW17-7814GL__	34.0" [864]	5.8" [140]	8°	RK-W600-G	302.00 [136.98]
FW17W700GL__	FW17-7813GL__		6.8" [173]	11°	RK-W700-G	308.00 [139.71]
FW17W800GL__	FW17-7812GL__		7.8" [198]	14°	RK-W800-G	313.00 [141.97]
FW17W900GL__	FW17-7811GL__		8.8" [224]	17°	RK-W900-G	318.00 [144.24]
—	FW17-7553GL__		10.5" [267]	15°	XA-7553-G	345.00 [156.49]
—	FW17-7552GL__		11.5" [292]	15°	XA-7552-G	351.00 [159.21]

* No longer available if cast version exists.
** See bracket section for more information.

XL-FW10081PM-en-US Rev D 2016-03-01 Amendments and errors reserved. © SAF-HOLLAND, Inc.

FW17 Sliding ILS Inboard with Angle Mount

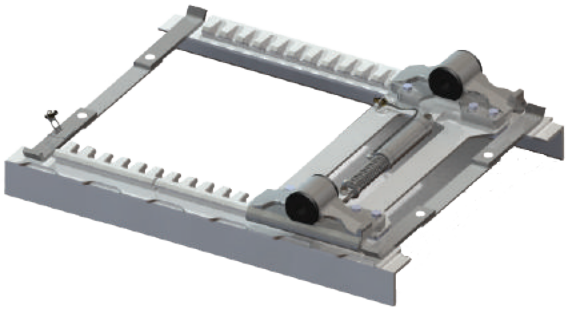

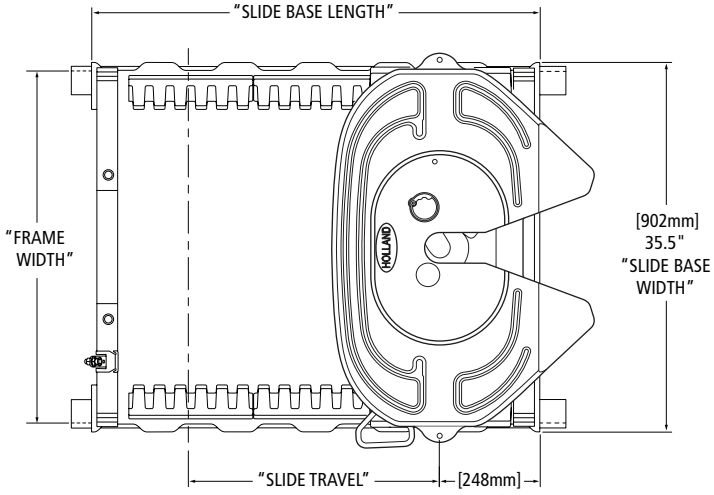

Frame width "A-C": .38" x 3" x 4" angle
"D-K": .38" x 3.5" x 4" angle
"K-Q": .38" x 4" x 4" angle

STANDARD OPTION CODES Replaces the Underscore (__) on the new and legacy part number.	
NUMBER CODE	DESCRIPTION
00 / Blank	Standard, No Other Option
80	Air Release, OEM Replacement, Left-Hand Only
86	Air Release, Aftermarket Installations, Air Control Modules Included, Left-Hand Only

FRAME WIDTH CODE CHART					
CODE	FRAME WIDTH	CODE	FRAME WIDTH	CODE	FRAME WIDTH
A	33.25"	F	33.88"	L	34.50"
B	33.38"	G†	34.00"	M	34.62"
C	33.50"	H	34.12"	N	34.75"
D	33.62"	J	34.25"	P	34.88"
E	33.75"	K	34.38"	Q	35.00"

† Standard

FW PART NUMBER	TRAD. SLIDER PART NUMBER (AIR RELEASE)*	TRAD. SLIDER PART NUMBER (MANUAL RELEASE)*	HEIGHT IN [MM]	SLIDE TRAVEL	SLIDE BASE LENGTH	B	C	REPLACEMENT SLIDE BASE AND BRACKET**	REPLACEMENT SLIDE BASE **	REPLACEMENT BRACKET**	FW WEIGHT LBS [KG]
FW17B712GL__	FW17-7003G1L__	FW17-7013G1L__	7.2" [183]	12" [305]	31" [787]	8°	8°	XA-B712G	XA-B12G	RK-10689-1	429.00 [194.59]
FW17B724GL__	FW17-7003G2L__	FW17-7013G2L__		24" [610]	43" [1092]			XA-B724G	XA-B24G	RK-10689-1	475.00 [215.46]
FW17B736GL__	FW17-7003G4L__	FW17-7013G4L__		36" [914]	55" [1397]			XA-B736G	XA-B36G	RK-10689-1	522.00 [236.78]
FW17B748GL__	FW17-7003G5L__	FW17-7013G5L__		48" [1219]	67" [1702]			XA-B748G	XA-B48G	RK-10689-1	568.00 [257.64]
FW17B812GL__	FW17-7002G1L__	FW17-7012G1L__	8.2" [208]	12" [305]	31" [787]	12°	10°	XA-B812G	XA-B12G	RK-10689-2	434.00 [196.86]
FW17B824GL__	FW17-7002G2L__	FW17-7012G2L__		24" [610]	43" [1092]			XA-B824G	XA-B24G	RK-10689-2	480.00 [217.72]
FW17B836GL__	FW17-7002G4L__	FW17-7012G4L__		36" [914]	55" [1397]			XA-B836G	XA-B36G	RK-10689-2	526.00 [238.59]
FW17B848GL__	FW17-7002G5L__	FW17-7012G5L__		48" [1219]	67" [1702]			XA-B848G	XA-B48G	RK-10689-2	572.00 [259.45]
FW17B912GL__	FW17-7001G1L__	FW17-7011G1L__	9.2" [234]	12" [305]	31" [787]	15°	12°	XA-B912G	XA-B12G	RK-10689-3	438.00 [198.67]
FW17B924GL__	FW17-7001G2L__	FW17-7011G2L__		24" [610]	43" [1092]			XA-B924G	XA-B24G	RK-10689-3	484.00 [219.54]
FW17B936GL__	FW17-7001G4L__	FW17-7011G4L__		36" [914]	55" [1397]			XA-B936G	XA-B36G	RK-10689-3	530.00 [240.40]
FW17B948GL__	FW17-7001G5L__	FW17-7011G5L__		48" [1219]	67" [1702]			XA-B948G	XA-B48G	RK-10689-3	576.00 [261.27]

* No longer available if cast version exists.
** See bracket section for more information.

 Amendments and errors reserved. © SAF-HOLLAND, Inc.

FW17 Sliding Traditional Inboard with Angle Mount

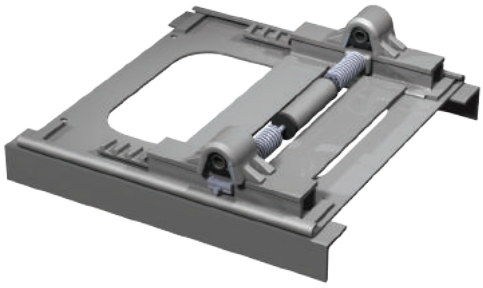

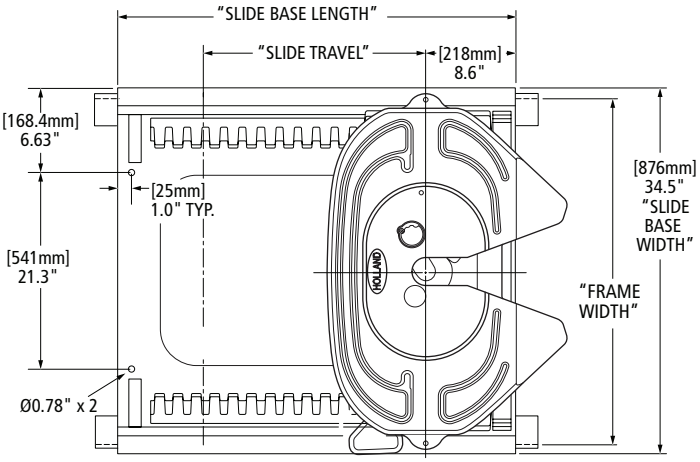

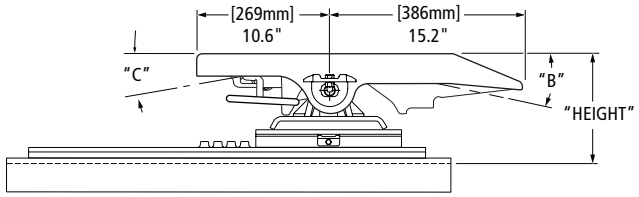

Frame Width "A-L": .38" x 4" x 4" Angle
"M-Q": .38" x 5" x 5" Angle (Option Code 21)

FRAME WIDTH CODE CHART					
CODE	FRAME WIDTH	CODE	FRAME WIDTH	CODE	FRAME WIDTH
A	33.25"	F	33.88"	M	34.62"
B	33.38"	G†	34.00"	N	34.75"
C	33.50"	H	34.12'	P	34.88"
D	33.62"	K	34.38"	Q	35.00"
E	33.75"	L	34.50"		

† Standard

STANDARD OPTION CODES Replaces the Underscore (__) on the new and legacy part number.	
NUMBER CODE	DESCRIPTION
00 / Blank	Standard, No Other Options
11	Weight Saver Cutout

FW PART NUMBER*	REPLACED BY ILS FW PART NUMBER*	SLIDE BRACKET TYPE	HEIGHT	SLIDE TRAVEL	SLIDE BASE LENGTH	B	C	REPLACEMENT SLIDE BASE **	REPLACEMENT BRACKET**	FW WEIGHT LBS [KG]
FW17-7002G3L__	FW17B824GL00	AIR RELEASE	8.1"	24.5" [622]	45.0" [1143]	14°	19°	XA-0753-G3-__	XA-7002	752.00 [341.10]

* No longer available if cast version exists.
** See bracket section for more information.

XL-FW10081PM-en-US Rev D 2016-03-01 Amendments and errors reserved. © SAF-HOLLAND, Inc.

THIS PAGE INTENTIONALLY LEFT BLANK

 Amendments and errors reserved. © SAF-HOLLAND, Inc.

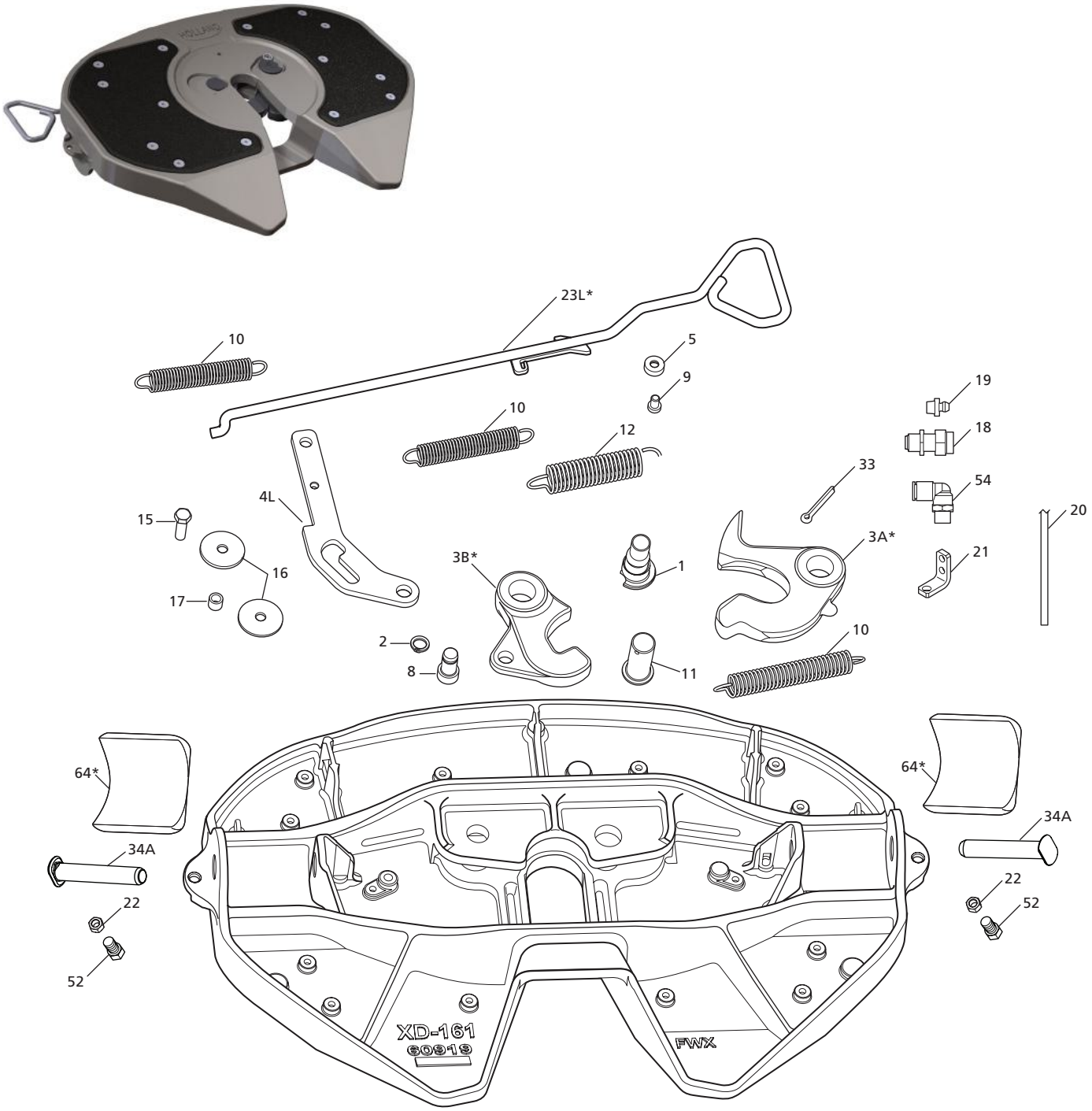

XL-FW10081PM-en-US Rev D 2016-03-01 Amendments and errors reserved. © SAF-HOLLAND, Inc.

FW16 PARTS LIST				
ITEM	DESCRIPTION	PART NUMBER	QTY.	WEIGHT LBS [KG]
1	Pin, Adjusting	XA-10364-3-P	1	1.56 [0.71]
2	Retaining Ring, .75" Dia.	XB-05855-1	1	0.01 [0.005]
3A*	Lock Jaw, See RK-171-11078 or RK-171-11078-AR	XA-10486-A	1	6.03 [2.74]
3B*	Hook, Manual Release, RK-171-11078	XA-10487-P	1	4.40 [2.00]
4L	Release Cam, Left-Hand	XA-11458	1	1.85 [0.84]
5	Adjusting Pin Keeper	XA-10706-AP	1	0.04 [0.02]
8	Pin, Hook	XA-10485-1	1	0.29 [0.13]
9	LHSCS, M10 x 1.5 x 16 mm GR 10.9	XB-02724-M	3	0.04 [0.02]
10	Spring, Extension, Handle, Inner	XB-10489-P	3	0.23 [0.10]
11	Pin, Lock	XA-06344-P	1	1.43 [0.65]
12	Spring, Extension, Handle, Outer	XB-10490-P	1	0.32 [0.15]
15	HHCS, M12 x 1.75 mm x 40 mm GR 10.9	XB-HCS-M12-40-Z	1	0.05 [0.02]
16	Washer, Stainless Steel, .53" I.D. x 2.25" O.D.	XB-10294	2	0.11 [0.05]
17	Roller, .49" I.D. x .68" O.D. x .53" Long	XA-10810	1	0.02 [0.01]
18	Fitting, Lubrication	XB-H-38	1	0.01 [0.005]
19	Union, Female Bulkhead	XB-03124-BFU	1	0.08 [0.03]
20	Tubing, Nylon, .25" O.D.	XA-06565-2	1	0.03 [0.01]
21	Bracket, Lube Tube	XA-03124-3	1	0.24 [0.11]
22	Lock Nut, .50"-20 GR C	XB-T-69-A	2	0.04 [0.02]
23L*	Release Handle, Left- and Right-Hand, See RK-161-11493	XA-11618-P	1	2.64 [1.20]
33	Pin, Cotter, .25" x 2" Long	XB-5	1	0.05 [0.02]
34A	Pin, Bracket	XE-06356-P	2	1.98 [0.90]
52	HHCS, .50"-20 x 1.25" GR 5	XB-C-95	2	0.11 [0.05]
54	Fitting, 90° Push - Connect	XB-09031	1	0.01 [0.005]
64*	Pocket Insert, See RK-PKT-2	XD-08908	2	1.72 [0.78]

*Not sold individually - must be purchased in kit.

REPLACEMENT TOP PLATE PART NUMBERS	
PART NUMBER	DESCRIPTION
XA-16-A-P	Right-Hand Release with Pins
XA-16-A-L-P	Left-Hand Release with Pins

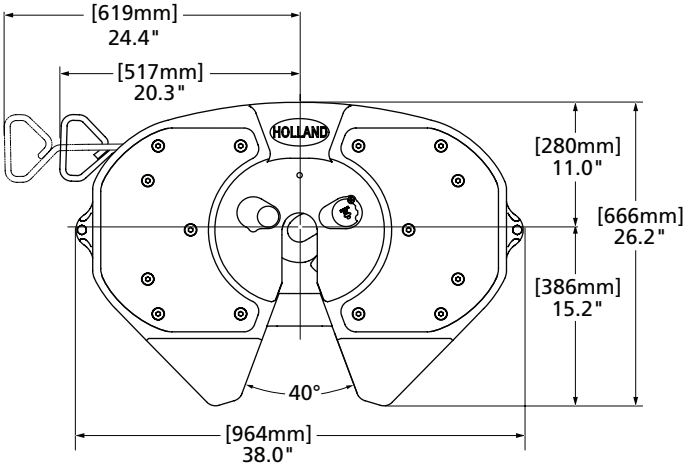

For XA-16 fifth wheel rebuild procedures, see Holland publication XL-FW10071RM-en-US at www.safholland.us

 Amendments and errors reserved. © SAF-HOLLAND, Inc.

RK-161-11078
Lock

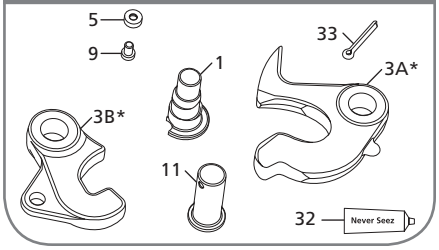

RK-161-11493
Release Handle, Left- and Right-Hand

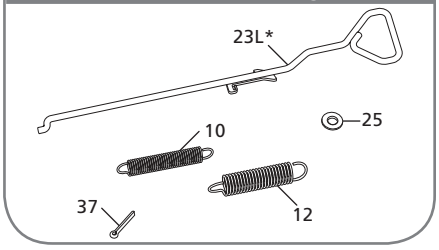

RK-161-1
Lube Plate

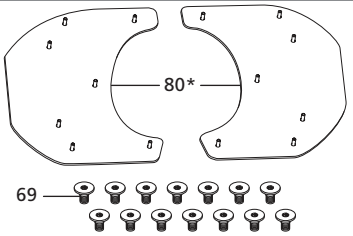

RK-PKT-2
Pocket Inserts

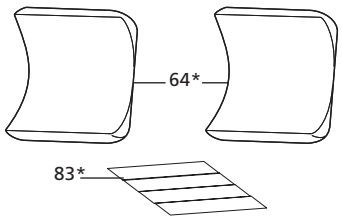

RK-10605
Bracket Pin and Bushing, ILS

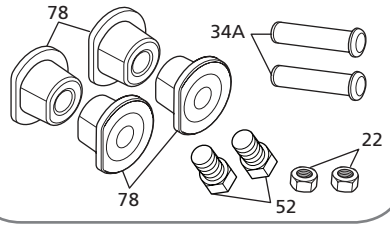

RK-06973-1
Bracket Pin and Cushions

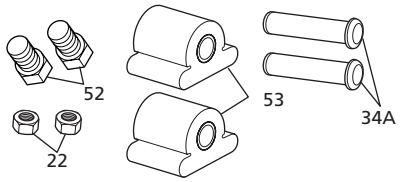

RK-161-11774
Lube Tube Replacement Kit

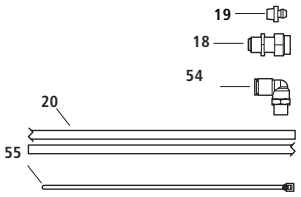

FW16 KIT PARTS LIST

ITEM	DESCRIPTION	PART NUMBER	QTY.	WEIGHT LBS [KG]
1	Pin, Adjusting	XA-10364-3-P	1	1.56 [0.71]
3A*	Lock Jaw	XA-10486-A	1	6.03 [2.74]
3B*	Hook, Manual Release	XA-10487-P	1	4.40 [2.00]
5	Adjusting Pin Keeper	XA-10706-AP	1	0.04 [0.02]
9	LHSCS, M10 x 1.5 x 16 mm GR 10.9	XB-02724-M	1	0.04 [0.02]
10	Spring, Extension, Handle, Inner	XB-10489-P	1	0.23 [0.10]
11	Pin, Lock	XA-06344-P	1	1.43 [0.65]
12	Spring, Extension, Handle, Outer	XB-10490-P	1	0.32 [0.15]
22	Lock Nut, .50"-20 GR C	XB-T-69-A	2	0.04 [0.02]
23L*	Release Handle, Left- and Right-Hand Release	XA-11618-RP-P	1	2.62 [1.19]
25	Washer, .53" I.D. x 1.06" O.D.	XB-PW-1732-1-116	1	0.02 [0.01]
32	Never-Seez, 7.5g Tube	XB-02967	1	N/A
33	Pin, Cotter .25" x 2" Long	XB-5	1	0.05 [0.02]
34A	Pin, Bracket	XE-06356-P	2	1.98 [0.90]

FW16 KIT PARTS LIST

ITEM	DESCRIPTION	PART NUMBER	QTY.	WEIGHT LBS [KG]
37	Pin, Cotter, .13" Dia. x 1" Long	XB-16	1	0.01 [0.005]
52	HHCS, .50"-20 x 1.25" GR 5	XB-C-95	2	0.11 [0.05]
53	Cushion, Rubber	XB-0011-2	2	0.60 [0.27]
64*	Pocket Insert	XD-08908	2	1.72 [0.78]
69	Bolt, Shoulder, Torx Head, M10 x 22 mm	662130114	14	0.02 [0.01]
78	Cushions, Rubber ILS	XB-10605	4	0.39 [0.18]
80*	Lube Plate	XB-161-10740	2	2.90 [1.32]
83*	Tape, Double Face	XB-09422	4	0.01 [0.005]

*Not sold individually - must be purchased in kit.

XL-FW10081PM-en-US Rev D 2016-03-01 Amendments and errors reserved. © SAF-HOLLAND, Inc.

RK-161-A
Complete Rebuild, Left- and Right-Hand Release

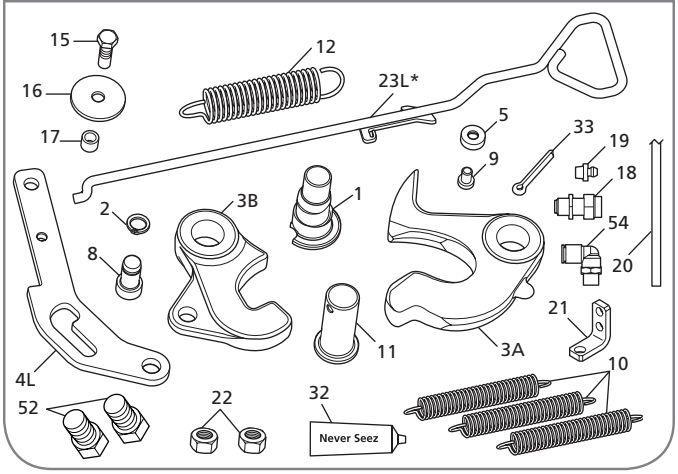

FW16 KIT PARTS LIST

ITEM	DESCRIPTION	PART NUMBER	QTY.	WEIGHT LBS [KG]
1	Pin, Adjusting	XA-10364-3-P	1	1.56 [0.71]
2	Retaining Ring, .75" Dia.	XB-05855-1	1	0.01 [0.005]
3A*	Lock Jaw, See RK-171-11078 or RK-171-11078-AR	XA-10486	1	6.08 [2.76]
3B*	Hook, Manual Release, See RK-171-11078	XA-10487-P	1	4.40 [2.00]
4L	Release Cam, Left-Hand Release	XA-11458	1	1.85 [0.84]
5	Adjusting Pin Keeper	XA-10706-AP	1	0.04 [0.02]
8	Pin, Hook	XA-10485-1	1	0.29 [0.13]
9	LHSCS, M10 x 1.5 x 16 mm, Class 10.9	XB-02724-M	1	0.04 [0.02]
10	Spring, Extension, Inner Handle	XB-10489-P	3	0.23 [0.10]
11	Pin, Lock	XA-06344-P	1	1.43 [0.65]
12	Spring, Extension, Outter Handle	XB-10490-P	1	0.32 [0.15]
15	HHCS, M12 x 1.75 mm x 40 mm, Class 10.9	XB-HCS-M12-40-Z	1	0.05 [0.02]
16	Washer, .53" I.D. x 2.25" O.D., Stainless Steel	XB-10294	2	0.11 [0.05]
17	Roller, .49" I.D. x .68" O.D. x .53" Long	XA-10810	1	0.02 [0.01]
18	Fitting, Lubrication	XB-H-38	1	0.01 [0.005]
19	Union, Female Bulkhead	XB-03124-BFU	1	0.08 [0.03]
20	Tubing, Nylon, .25" O.D.	XA-06565-2	1	0.03 [0.01]
21	Bracket, Lube Tube	XA-03124-3	1	0.24 [0.11]
22	Lock Nut, .50"-20 GR C	XB-T-69-A	2	0.04 [0.02]
23L*	Release Handle, Left- and Right-Hand Release, See RK-161-11493	XA-11618-P	1	2.64 [1.20]
32	Never-Seez, 7.5g Tube	XB-02967	1	N/A
33	Pin, Cotter, .25" x 2" Long	XB-5	1	0.05 [0.02]
52	HHCS, .50"-20 x 1.25" GR5	XB-C-95	2	0.11 [0.05]
54	Fitting, 90° Push - Connect	XB-09031	1	0.01 [0.005]

*Not sold individually - must be purchased in kit.

 Amendments and errors reserved. © SAF-HOLLAND, Inc.

SAF-HOLLAND Group

"NEW" Fifth Wheel Assembly Part Numbers

General Holland prefix indicating complete fifth wheel assembly

SERIES	
16	FW16 Series

MOUNTING STYLE	
NO.	DESCRIPTION
Standard Duty Sliders	
A	Outboard (1 pc tie-bar)
B	Inboard (Serrated 3 pc tie-bar)
C	Inboard (Straight 3 pc tie-bar) (DTNA Air Fitting)
F	Outboard (1 pc tie-bar)
H	Inboard (1 pc tie-bar for PACCAR)
J	Outboard (1 pc tie-bar for PACCAR)
Standard Duty Stationaries	
Z	Integrated Plate Mount
Y	Foot Mount
X	Bracket Castings Only (No Angle or Base Plate)
W	Brackets w/4" Vert. Leg Angle
Specialty Mounting Systems	
K	Kompensator
N	No-Tilt

HEIGHT (approx.)	
NO.	DESCRIPTION
6	6" (Stationary only)
7	7"
8	8"
9	9"
0	10"
1	11" (Komp only)
2	12.0" [305] (Komp only)
3	13" (Komp only)

FW 16 X X XX X X XX

TRAVEL	
NO.	DESCRIPTION
00	Stationary
ILS Travel	
12	12"
18	18" (Only H & J) Mounting Style
24	24"
36	36"
48	48"
No-Tilt ILS Travel	
06	6"
18	18"
30	30"
42	42"
Kompensator Travel	
11	11"
17	17"
24	24"
41	41"
54	54"
66	66"

ANGLES	
NO.	DESCRIPTION
No Angle Mounting Systems	
W	Aftermarket Inboard No-Tilt & Komp (Serrated Edge)
X	Outboard Slider ***or*** Inboard Slider w/o Angles ***or*** Stationary w/o Angles
Y	Outboard No-Tilt & Komp
Z	OEM Inboard No-Tilt & Komp (straight edge)
Frame Width for Standard Duty Mounting Angles	
A	33.25"
B	33.38"
C	33.50"
D	33.62"
E	33.75
F	33.88"
G	34.00"
H	34.12"
J	34.25"
K	34.38"
L	34.50"

RELEASE HANDLE	
NO.	DESCRIPTION
L	Left-hand (Road-side)
R	Right-hand (Curb-side)

OPTION CODE*	
NO.	DESCRIPTION
00	No option
02	Manual Secondary Lock
24	Drilled & Tapped for Auto Lube
28	Dolly Release Handle
80	Air Release Top Plate
EL	Electronic Lock Indicator (ELI)
EA	ELI w/ Air Release Top Plate
8E	ELI w/Air Release Top Plate (PACCAR only)

XL-FW10081PM-en-US Rev D 2016-03-01 Amendments and errors reserved. © SAF-HOLLAND, Inc.

THIS PAGE INTENTIONALLY LEFT BLANK

 Amendments and errors reserved. © SAF-HOLLAND, Inc.

SAF-HOLLAND Group

FW16 Stationary Foot Mount



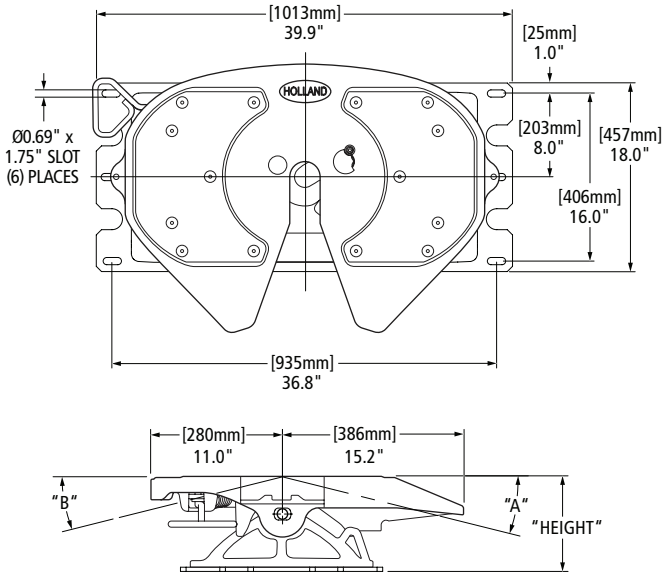

FW PART NUMBER (CAST BRACKET)◊	HEIGHT	A	B	REPLACEMENT BRACKETS**	FW WEIGHT LBS [KG]
FW16Y600XL00	6.0"	8°	8°	RK-Y600	268.00 [121.56]
FW16Y700XL00	7.0"	11°	11°	RK-Y700	274.00 [124.28]
FW16Y800XL00	8.0"	14°	14°	RK-Y800	278.00 [126.10]
FW16Y900XL00	9.0"	17°	17°	RK-Y900	284.00 [128.82]

◊ For right-hand release fifth wheels, change "L" to "R" in part number.
** See bracket section for more information.

FW16 Stationary Integrated Plate Mount



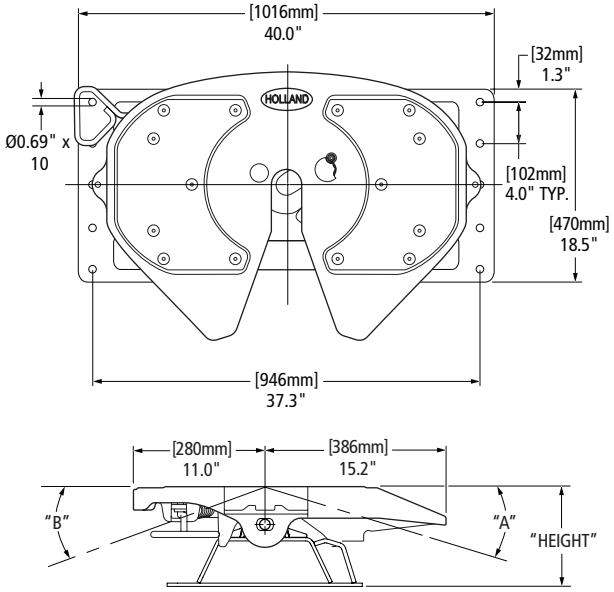

FW PART NUMBER (CAST BRACKET)◊	HEIGHT	A	B	REPLACEMENT BRACKETS**	FW WEIGHT LBS [KG]
FW16Z600XL00	6.0"	8°	8°	RK-Z600	284.00 [128.82]
FW16Z700XL00	7.0"	11°	11°	RK-Z700	292.00 [132.45]
FW16Z800XL00	8.0"	14°	14°	RK-Z800	299.00 [135.62]
FW16Z900XL00	9.0"	17°	17°	RK-Z900	295.00 [133.81]

◊ For right-hand release fifth wheels, change "L" to "R" in part number.
** See bracket section for more information.

XL-FW10081PM-en-US Rev D 2016-03-01 Amendments and errors reserved. © SAF-HOLLAND, Inc.

FW16 Stationary Brackets for Angle Mounting

Also Available With Angle Later In This Section.



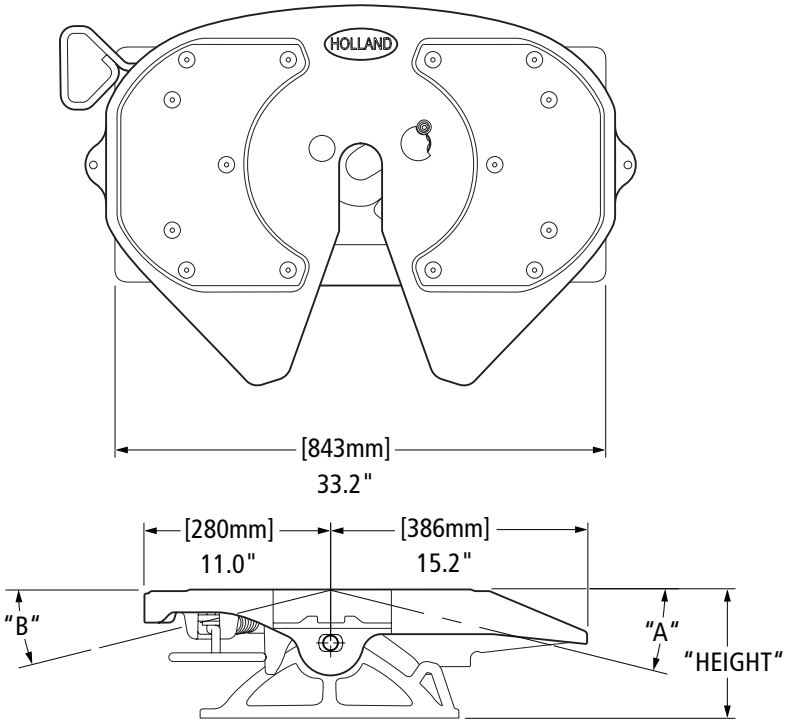

FW PART NUMBER (CAST BRACKET)◊	HEIGHT	A	B	REPLACEMENT BRACKETS**	FW WEIGHT LBS [KG]
FW16X600XL00	5.6"	8°	8°	RK-X600	238.00 [107.95]
FW16X700XL00	6.6"	11°	11°	RK-X700	244.00 [110.68]
FW16X800XL00	7.6"	14°	14°	RK-X800	249.00 [112.94]
FW16X900XL00	8.6"	17°	17°	RK-X900	254.00 [115.21]

◊ For right-hand release fifth wheels, change "L" to "R" in part number.
** See bracket section for more information.

 Amendments and errors reserved. © SAF-HOLLAND, Inc.

FW16 Sliding ILS Outboard Mount



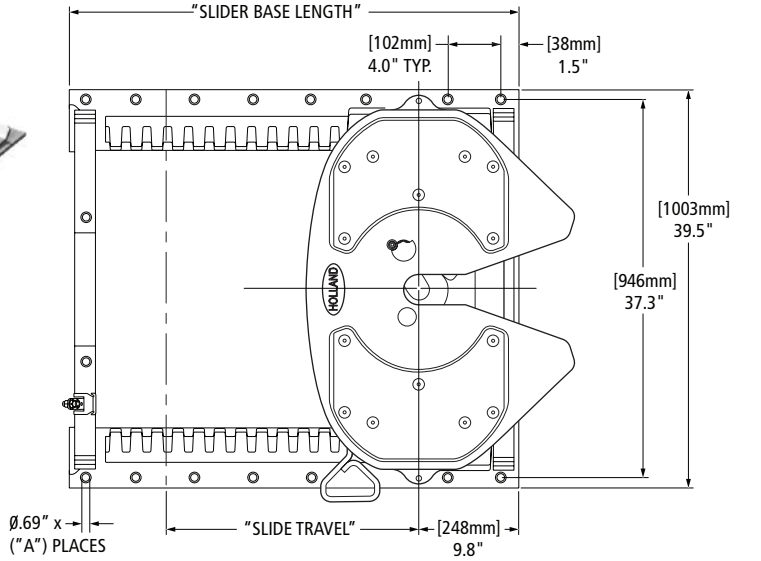

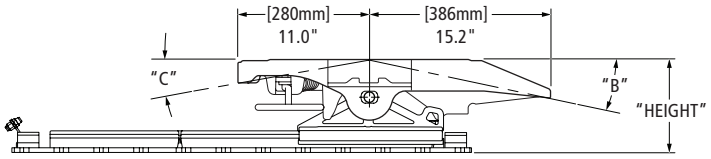

ILS FW PART NUMBER◊	HEIGHT	SLIDE TRAVEL	SLIDE BASE LENGTH	A # OF HOLES	B	C	REPLACEMENT SLIDE BASE AND BRACKET**	REPLACEMENT SLIDE BASE**	REPLACEMENT BRACKET**	FW WEIGHT LBS [KG]
FW16A712XL00	7.1"	12" [305]	31" [787]	16	8°	8°	XA-A712	XA-A12	RK-10689-1	387.00 [175.54]
FW16A724XL00		24" [610]	43" [1092]	22			XA-A724	XA-A24		420.00 [190.51]
FW16A736XL00		36" [914]	55" [1397]	28			XA-A736	XA-A36		454.00 [205.93]
FW16A748XL00		48" [1219]	67" [1702]	34			XA-A748	XA-A48		488.00 [221.35]
FW16A812XL00	8.1"	12" [305]	31" [787]	16	12°	12°	XA-A812	XA-A12	RK-10689-2	394.00 [178.72]
FW16A824XL00		24" [610]	43" [1092]	22			XA-A824	XA-A24		427.00 [193.68]
FW16A836XL00		36" [914]	55" [1397]	28			XA-A836	XA-A36		461.00 [209.11]
FW16A848XL00		48" [1219]	67" [1702]	34			XA-A848	XA-A48		494.00 [224.07]
FW16A912XL00	9.1"	12" [305]	31" [787]	16	15°	15°	XA-A912	XA-A12	RK-10689-3	400.00 [181.44]
FW16A924XL00		24" [610]	43" [1092]	22			XA-A924	XA-A24		434.00 [196.86]
FW16A936XL00		36" [914]	55" [1397]	28			XA-A936	XA-A36		468.00 [212.28]
FW16A948XL00		48" [1219]	67" [1702]	34			XA-A948	XA-A48		501.00 [227.25]

◊ For right-hand release fifth wheels, change "L" to "R" in part number.
** See bracket section for more information.

XL-FW10081PM-en-US Rev D 2016-03-01 Amendments and errors reserved. © SAF-HOLLAND, Inc.

FW16 Sliding ILS Inboard Mount for Angle

Also Available With Angle Later In This Section.



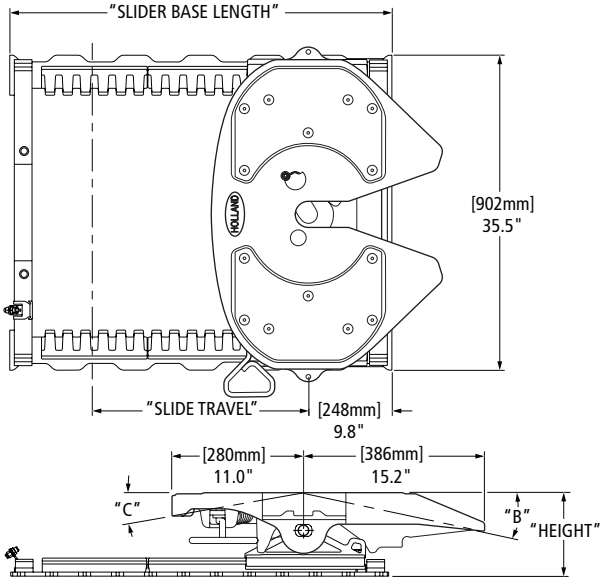

ILS FW PART NUMBER◊	HEIGHT	SLIDE TRAVEL	SLIDE BASE LENGTH	B	C	REPLACEMENT SLIDE BASE AND BRACKET**	REPLACEMENT SLIDE BASE**	REPLACEMENT BRACKETS**	FW WEIGHT LBS [KG]
FW16B712XL00	7.0"	12" [305]	31" [787]	8°	8°	XA-B712	XA-B12	RK-10689-1	375.00 [170.10]
FW16B724XL00		24" [610]	43" [1092]			XB-B724	XA-B24		402.00 [182.34]
FW16B736XL00		36" [914]	55" [1397]			XA-B736	XA-B36		433.00 [196.41]
FW16B748XL00		48" [1219]	67" [1702]			XA-B748	XA-B48		458.00 [207.75]
FW16B812XL00	8.0"	12" [305]	31" [787]	12°	10°	XA-B812	XA-B12	RK-10689-2	379.00 [171.91]
FW16B824XL00		24" [610]	43" [1092]			XA-B824	XA-B24		406.00 [184.16]
FW16B836XL00		36" [914]	55" [1397]			XA-B836	XA-B36		435.00 [197.31]
FW16B848XL00		48" [1219]	67" [1702]			XA-B848	XA-B48		463.00 [210.01]
FW16B912XL00	9.0"	12" [305]	31" [787]	15°	12°	XA-B912	XA-B12	RK-10689-3	383.00 [173.73]
FW16B924XL00		24" [610]	43" [1092]			XA-B924	XA-B24		411.00 [186.43]
FW16B936XL00		36" [914]	55" [1397]			XA-B936	XA-B36		439.00 [199.13]
FW16B948XL00		48" [1219]	67" [1702]			XA-B948	XA-B48		467.00 [211.83]

◊ For right-hand release fifth wheels, change "L" to "R" in part number.
** See bracket section for more information.

 Amendments and errors reserved. © SAF-HOLLAND, Inc.

FW16 Stationary Brackets with Angle Mount



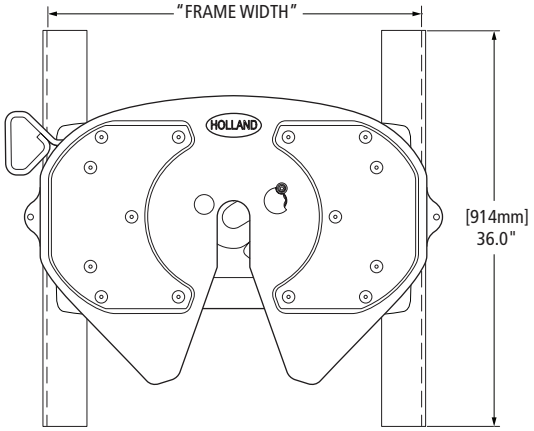

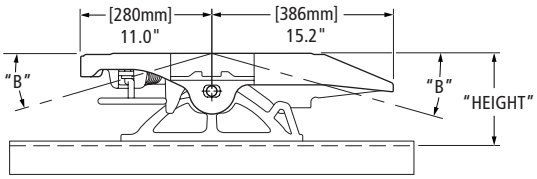

Frame width "A-G": .38" x 4" x 4" angle
"H-N": .38" x 4" x 6" angle

FW PART NUMBER CAST BRACKET◊	HEIGHT	B	REPLACMENT BRACKETS**	FW WEIGHT LBS [KG]
FW16W600GL00	6.0"	8°	RK-W600-G	297.00 [134.72]
FW16W700GL00	7.0"	11°	RK-W700-G	302.00 [136.98]
FW16W800GL00	8.0"	14°	RK-W800-G	307.00 [139.25]
FW16W900GL00	9.0"	17°	RK-W900-G	312.00 [141.52]

◊ For right-hand release fifth wheels, change "L" to "R" in part number.
** See bracket section for more information.

FRAME WIDTH CODE CHART					
CODE	FRAME WIDTH	CODE	FRAME WIDTH	CODE	FRAME WIDTH
A	33.25"	F	33.88"	L	34.50"
B	33.38"	G†	34.00"	M	34.62"
C	33.50"	H	34.12"	N	34.75"
D	33.62"	J	34.25"		
E	33.75"	K	34.38"		

† Standard

XL-FW10081PM-en-US Rev D 2016-03-01 Amendments and errors reserved. © SAF-HOLLAND, Inc.

FW16 Sliding ILS Inboard with Angle Mount

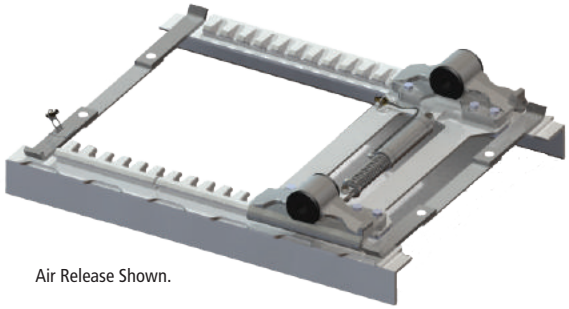

Air Release Shown.

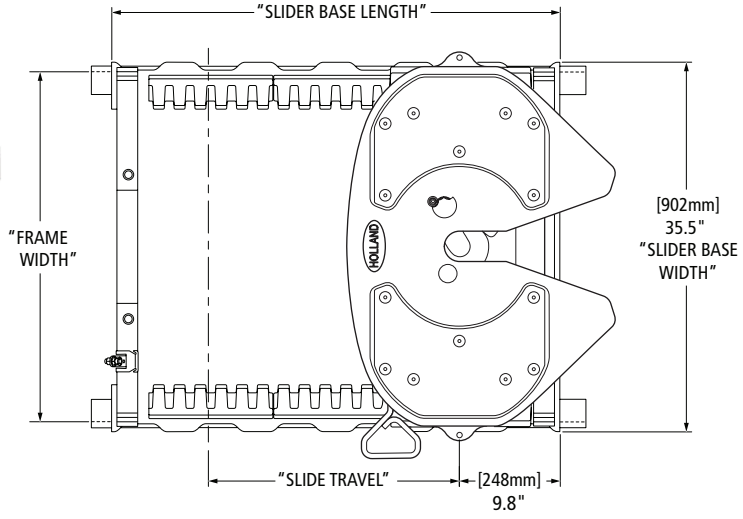

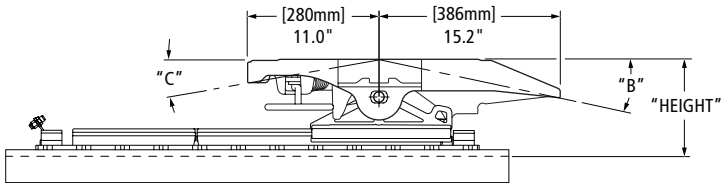

Frame width "A-C": .38" x 3" x 4" angle
"D-K": .38" x 3.5" x 4" angle
"K-Q": .38" x 4" x 4" angle

FRAME WIDTH CODE CHART					
CODE	FRAME WIDTH	CODE	FRAME WIDTH	CODE	FRAME WIDTH
A	33.25"	F	33.88"	L	34.50"
B	33.38"	G†	34.00"	M	34.62"
C	33.50"	H	34.12"	N	34.75"
D	33.62"	J	34.25"	P	34.88"
E	33.75"	K	34.38"	Q	35.00"

† Standard

FW PART NUMBER◊	HEIGHT	SLIDE TRAVEL	SLIDE BASE LENGTH	B	C	REPLACEMENT SLIDE BASE AND BRACKET**	REPLACEMENT SLIDE BASE **	REPLACEMENT BRACKET**	FW WEIGHT LBS [KG]
FW16B712GL00	7.4"	12" [305]	31" [787]	8°	8°	XA-B712G	XA-B12G	RK-10689-1	426.00 [193.23]
FW16B724GL00		24" [610]	43" [1092]			XA-B724G	XA-B24G	RK-10689-1	472.00 [214.10]
FW16B736GL00		36" [914]	55" [1397]			XA-B736G	XA-B36G	RK-10689-1	519.00 [235.41]
FW16B748GL00		48" [1219]	67" [1702]			XA-B748G	XA-B48G	RK-10689-1	564.00 [255.83]
FW16B812GL00	8.4"	12" [305]	31" [787]	12°	10°	XA-B812G	XA-B12G	RK-10689-2	431.00 [195.50]
FW16B824GL00		24" [610]	43" [1092]			XA-B824G	XA-B24G	RK-10689-2	477.00 [216.36]
FW16B836GL00		36" [914]	55" [1397]			XA-B836G	XA-B36G	RK-10689-2	523.00 [237.23]
FW16B848GL00		48" [1219]	67" [1702]			XA-B848G	XA-B48G	RK-10689-2	569.00 [258.09]
FW16B912GL00	9.4"	12" [305]	31" [787]	15°	12°	XA-B912G	XA-B12G	RK-10689-3	435.00 [197.31]
FW16B924GL00		24" [610]	43" [1092]			XA-B924G	XA-B24G	RK-10689-3	481.00 [218.18]
FW16B936GL00		36" [914]	55" [1397]			XA-B936G	XA-B36G	RK-10689-3	527.00 [239.04]
FW16B948GL00		48" [1219]	67" [1702]			XA-B948G	XA-B48G	RK-10689-3	573.00 [259.91]

◊ For right-hand release fifth wheels, change "L" to "R" in part number.
** See bracket section for more information.

 Amendments and errors reserved. © SAF-HOLLAND, Inc.

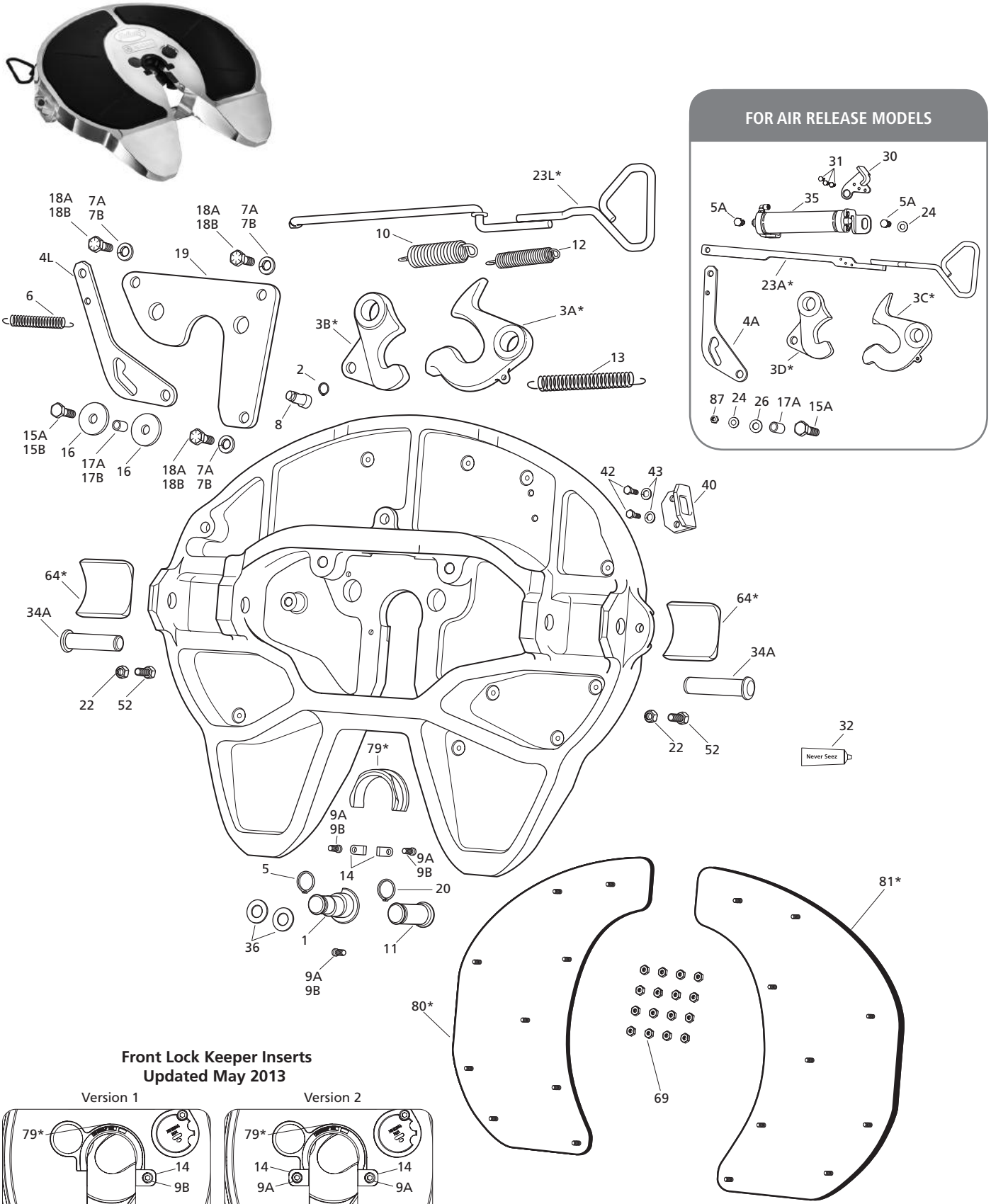

XL-FW10081PM-en-US Rev D 2016-03-01 Amendments and errors reserved. © SAF-HOLLAND, Inc.

FWAL PARTS LIST

ITEM	DESCRIPTION	PART NO.	QTY.	WEIGHT LBS [KG]
1	Pin, Adjusting	XA-10364-3-AL-P	1	1.58 [0.72]
2	Retaining Ring, .75" Dia.	XB-05855-1	1	0.01 [0.005]
3A*	Lock Jaw, See RK-AL-11078	XA-10486-E-P	1	6.10 [2.77]
3B*	Hook, See RK-171-11078	XA-10487-P	1	4.40 [2.00]
3C*	Lock Jaw, See RK-AL-11925	XA-11693-P	1	6.10 [2.77]
3D*	Hook, See RK-AL-11925	XA-10487-AR-P	1	4.41 [2.00]
4A	Release Cam, Left-Hand Release	XA-10483-ALA	1	2.01 [0.91]
4L	Release Cam, Left-Hand Release	XA-10483-AL	1	2.02 [0.92]
5	Retaining Ring, 1.13" Dia.	XB-05855	1	0.01 [0.005]
5A	Hex Head Cap Screw, M12 x 1.75 x 20 mm, Class 10.9	XB-HCS-M12-20-Z	2	0.03 [0.01]
6	Spring, Extension, Release Cam	XB-10563-1-P	1	0.09 [0.04]
7A	Washer, Lock, M16, Type B	XB-LW-M16-Z	3	0.02 [0.01]
7B	Washer, Lock .63"	XB-T-99	3	0.03 [0.01]
8	Pin, Hook	XA-10485-1	1	0.29 [0.13]
9A	LHSCS, M10 x 1.5 x 16 mm, Class 10.9 (Prior to May 2013)	XB-02724-M	3	0.04 [0.02]
	LHSCS, M10 x 1.5 x 16 mm, Class 10.9 (After May 2013, Air Release Only)		5	0.04 [0.02]
9B	LHSCS, .63" - 16 x .75" Long (Prior to May 2013)	XB-02724-1	2	0.04 [0.02]
10	Spring, Extension, Inner Handle	XB-10489-P	1	0.23 [0.10]
11	Pin, Lock	XA-06344-AL	1	1.45 [0.66]
12	Spring, Extension, Outer Handle	XB-10490-P	1	0.32 [0.15]
13	Spring, Extension, Lock	XB-05843-1-P	1	0.16 [0.07]
14	Insert Keeper (Prior to May 2013)	XA-10706-P	1	0.08 [0.04]
	Insert Keeper (After May 2013)		2	0.08 [0.04]
15A	HHCS, M12 x 1.75 mm x 40 mm, Class 10.9	XB-HCS-M12-40-Z	1	0.05 [0.02]
	HHCS, M12 x 1.75 mm x 40 mm, Class 10.9 (Air Release Only)		2	0.05 [0.02]
15B	HHCS, .50" - 20 x 1.75"	XB-2083	1	0.13 [0.06]
16	Washer, .53" I.D. x 2.25" O.D., Stainless Steel	XB-10294	2	0.11 [0.05]
17A	Bushing, Release Cam	XA-10810	1	0.02 [0.01]
	Bushing, Release Cam (Air Release Only)		2	0.02 [0.01]
17B	Bushing, Release Cam	XA-10810-1	1	0.02 [0.01]
18A	HHCS, M16 x 50 mm, Class 10.9	XB-HCS-M16-50-Z	3	0.12 [0.05]
18B	HHCS, .63" - 11 x 2.0"	XB-03553	3	0.26 [0.12]
19	Plate, Bottom	XA-11038	1	3.34 [1.51]
20	Retaining Ring, 1.38" Dia.	XB-08905	1	0.01 [0.005]
22	Lock Nut, .50"-20 GR C	XB-T-69-A	2	0.04 [0.02]
23A*	Release Handle	XA-AL-11384-P	1	3.00 [1.36]
23L*	Release Handle, Left-Hand, See RK-10495-AL-P	XA-10495-AL-P	1	2.51 [1.14]
24	Hardened Steel Washer, 1/2" I.D. x 1" O.D.	XB-06378	2	0.02 [0.01]
26	Hardened Steel Washer, 5/8" I.D. x 1-1/4" O.D.	XB-06180	1	0.04 [0.02]
30	Air Cylinder Pickup	XA-11384-ALA	1	0.56 [0.25]
31	Hex Head Cap Screw, 1/4"-20 x 5/8"	XB-10775	3	0.02 [0.01]
32	Never-Seez®, 7.5 g Tube	XB-02967	1	N/A
34A	Pin, Bracket	XE-06356-P	2	1.98 [0.90]
35	Air Cylinder Assembly	XA-10999-AL	1	4.69 [2.13]
36	Shim Ring	XB-05859-2	2	0.01 [0.005]

FWAL PARTS LIST

ITEM	DESCRIPTION	PART NO.	QTY.	WEIGHT LBS [KG]
40	Release Handle Plate, Dolly, See RK-AL-L	XA-11039-P	1	0.63 [0.29]
42	HHCS, .38"-16 x 1" GR 5	XB-C-38-C-1	2	0.05 [0.02]
43	Washer, Lock, .38" I.D. x .68" O.D.	XB-T-61	2	0.01 [0.005]
52	HHCS, .50"-20 x 1.25" GR 5	XB-C-95	2	0.11 [0.05]
64*	Pocket Insert, See RK-PKT-3	XD-10923	2	2.50 [1.13]
69	Lock Nut, .31"-18 GR B	XB-08931	16	0.01 [0.005]
79*	Front Lock Insert, See RK-AL-10680	XD-10680-P	1	0.67 [0.31]
80*	Lube Plate, Left-Hand, See RK-331-1	XA-08125-L	1	4.80 [2.18]
81*	Lube Plate, Right-Hand, See RK-331-1	XA-08125-R	1	4.80 [2.18]
82	Nut, Lock .75" - 16 (Replaced by XB-05855-1 Item 2)	N/A	1	N/A
83	HHCS, .75" - 16 x 2.0" (Replaced by XA-10485-1 Item 8)	N/A	1	N/A
87	Lock Nut, M12 x 1.75	XB-HLN-M12-Z	1	0.02 [0.01]

*Not sold individually - must be purchased in kit.

REPLACEMENT TOP PLATE PART NUMBERS

PART NUMBER	DESCRIPTION
XA-AL-A-80-L-P	Air Release with Pins
XA-AL-A-L-P	Left-Hand Release with Pins

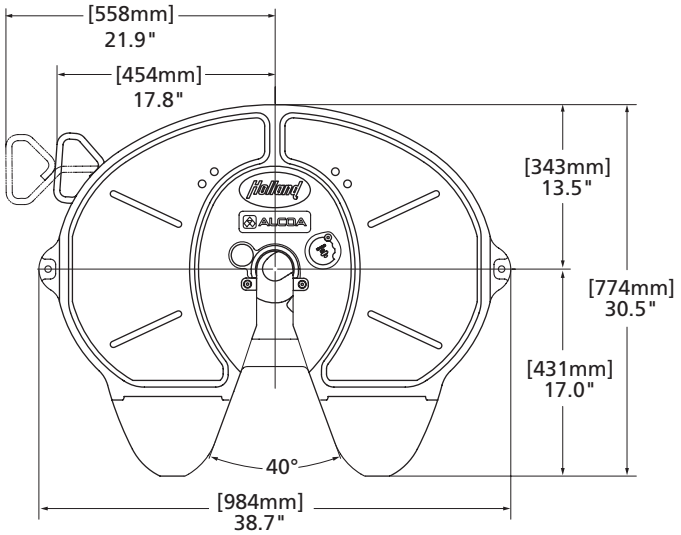

For XA-AL fifth wheel rebuild procedures, see Holland publication XL-FW535 at www.safholland.us

 Amendments and errors reserved. © SAF-HOLLAND, Inc.

RK-AL-11078
Lock, Standard

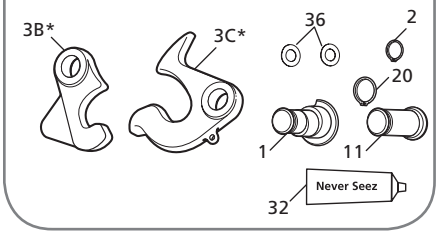

RK-AL-11925
Air Release, Lock Kit

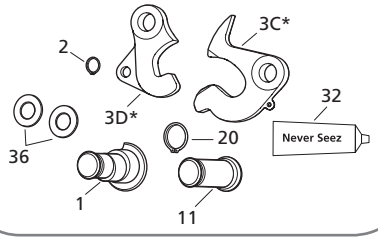

RK-10495-AL-P
Release Handle, Left-Hand

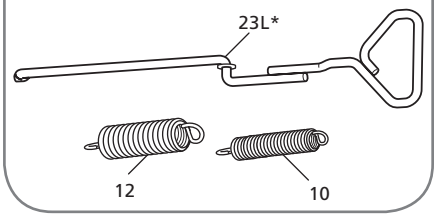

RK-PKT-3
Pocket Inserts

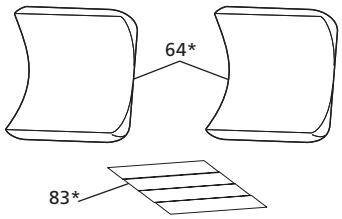

RK-AL-1
Lube Plate and Pocket Inserts

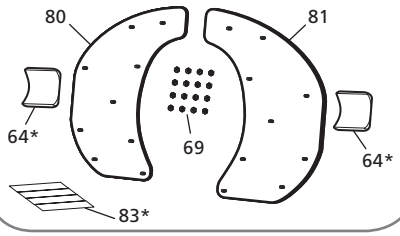

RK-331-1
Lube Plate

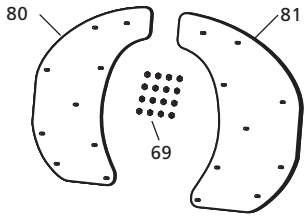

FWAL KIT PARTS LIST

ITEM	DESCRIPTION	PART NUMBER	QTY.	WEIGHT LBS [KG]
1	Pin, Adjusting	XA-10364-3-AL-P	1	1.58 [0.72]
2	Retaining Ring, .75" Dia.	XB-05855-1	1	0.01 [0.005]
3B*	Hook	XA-10487-P	1	4.40 [2.00]
3C*	Lock Jaw	XA-11693-P	1	6.10 [2.77]
3D*	Hook	XA-10487-AR-P	1	4.41 [2.00]
10	Spring, Extension, Inner Handle	XB-10489-P	1	0.23 [0.10]
11	Pin, Lock	XA-06344-AL	1	1.45 [0.66]
12	Spring, Extension, Outer Handle	XB-10490-P	1	0.32 [0.15]
20	Retaining Ring, 1.38" Dia.	XB-08905	1	0.01 [0.005]

FWAL KIT PARTS LIST

ITEM	DESCRIPTION	PART NUMBER	QTY.	WEIGHT LBS [KG]
23L*	Release Handle, Left-Hand	XA-10495-AL-P	1	2.51 [1.14]
32	Never-Seez, 7.5g Tube	XB-02967	1	N/A
36	Shim Ring	XB-05859-2	2	0.01 [0.005]
64*	Pocket Insert	XD-10923	2	2.50 [1.13]
69	Lock Nut. .31"-18 GR B	XB-08931	16	0.01 [0.005]
80	Lube Plate, Left-Hand	XA-08125-L	1	4.80 [2.18]
81	Lube Plate, Right-Hand	XA-08125-R	1	4.80 [2.18]
83*	Tape, Double Face	XB-09422	4	0.01 [0.005]

*Not sold individually - must be purchased in kit.

XL-FW10081PM-en-US Rev D 2016-03-01 Amendments and errors reserved. © SAF-HOLLAND, Inc.

RK-06973-1
Bracket Pins and Cushions

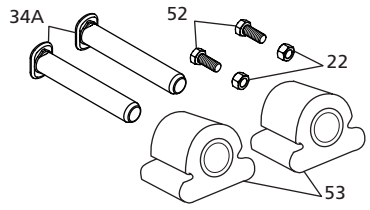

RK-10605
Bracket Pins and Bushings, ILS

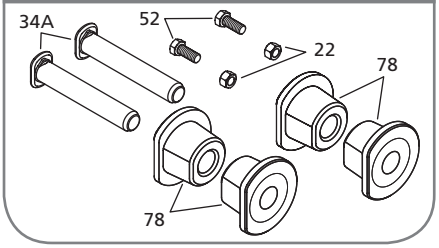

RK-AL-10680
Front Lock Kit

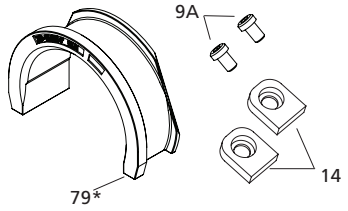

RK-AL-11798
Bracket Shims and Rubber Washers

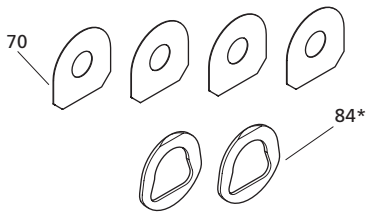

RK-AL-11384
Release Handle, Air Release

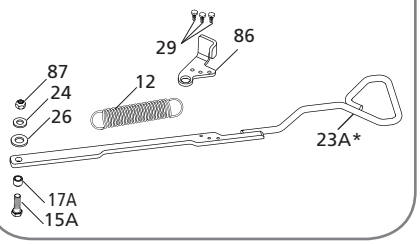

RK-AL-10999
Air Cylinder, Air Release

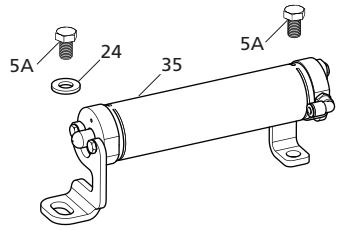

FWAL KIT PARTS LIST

ITEM	DESCRIPTION	PART NUMBER	QTY.	WEIGHT LBS [KG]
5A	Hex Head Cap Screw, M12 x 1.75 x 20 mm, Class 10.9	XB-HCS-M12-20-Z	2	0.03 [0.01]
9A	LHSCS, M10 x 1.5" x 16mm, Grade 10.9	XB-02724-M	2	0.04 [0.02]
12	Spring, Extension, Outer Handle	XB-10490-P	1	0.32 [0.15]
14	Insert Keeper	XA-10706-P	2	0.08 [0.04]
15A	HHCS, M12 x 1.75 mm x 40 mm, Class 10.9	XB-HCS-M12-40-Z	1	0.05 [0.02]
17A	Roller, .49" I.D. x .68" O.D. x .53" Long	XA-10810	1	0.02 [0.01]
22	Lock Nut, .50"-20 GR C	XB-T-69-A	2	0.04 [0.02]
23A*	Release Handle	XA-AL-11384-P	1	3.00 [1.36]
24	Hardened Steel Washer, 1/2" I.D. x 1" O.D.	XB-06378	1	0.02 [0.01]
26	Hardened Steel Washer, 5/8" I.D. x 1-1/4" O.D.	XB-06180	1	0.04 [0.02]

FWAL KIT PARTS LIST

ITEM	DESCRIPTION	PART NUMBER	QTY.	WEIGHT LBS [KG]
29	Hex Head Cap Screw, 1/4"-20 x 5/8"	XB-10775	3	0.02 [0.01]
34A	Pin, Bracket	XE-06356-P	2	1.98 [0.90]
35	Air Cylinder Assembly	XA-10999-AL	1	4.69 [2.13]
52	HHCS, .50"-20 x 1.25" GR 5	XB-C-95	2	0.11 [0.05]
53	Cushion, Rubber	XB-0011-2	2	0.60 [0.27]
70	Bracket, Shim	XA-11798	4	0.10 [0.04]
78	Cushions, Rubber, ILS	XB-10605	4	0.39 [0.18]
79*	Front Lock Insert, See RK-AL-10680	XD-10680-P	1	0.67 [0.31]
84*	Rubber Washer	XB-60144	2	0.05 [0.02]
86	Air Cylinder Pickup	XA-11384-ALA	1	0.56 [0.25]
87	Lock Nut, M12 x 1.75	XB-HLN-M12-Z	1	0.02 [0.01]

*Not sold individually - must be purchased in kit.

 Amendments and errors reserved. © SAF-HOLLAND, Inc.

SAF-HOLLAND Group

RK-AL-A-L
Complete Rebuild, Left-Hand Release

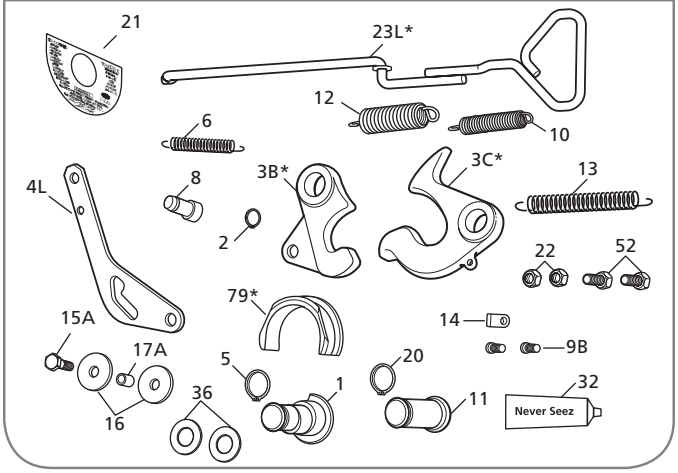

RK-AL-A-L-MET
Complete Rebuild, Left-Hand Release - Metric

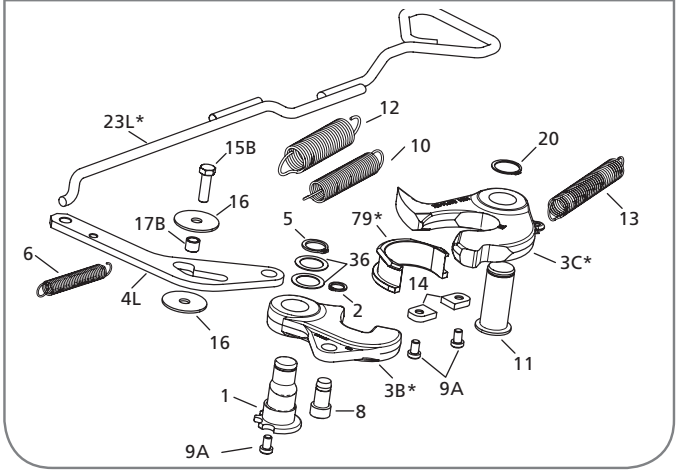

RK-AL-A-80-L
Air Release, Rebuild Kit

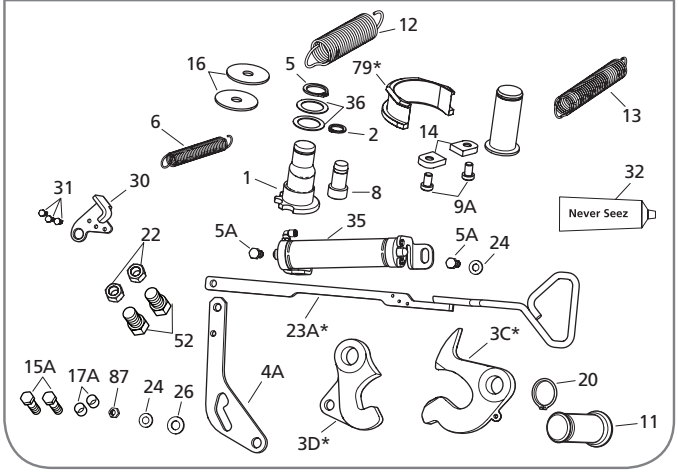

FWAL KIT PARTS LIST				
ITEM	DESCRIPTION	PART NUMBER	QTY.	WEIGHT LBS [KG]
1	Pin, Adjusting	XA-10364-3-AL-P	1	1.58 [0.72]
2	Retaining Ring, .75" Diameter	XB-05855-1	1	0.01 [0.005]
3B*	Hook, Manual Release, See RK-171-11078	XA-10487-P	1	4.40 [2.00]
3C*	Lock Jaw, See RK-AL-11925	XA-11693-P	1	6.10 [2.77]
3D*	Hook, Air Release, See RK-AL-11925	XA-10487-AR-P	1	4.41 [2.00]
4A	Cam, Release	XA-10483-ALA	1	2.01 [0.91]
4L	Release Cam, Left-Hand Release	XA-10483-AL	1	2.02 [0.92]
5	Retaining Ring, 1.13" Diameter	XB-05855	1	0.01 [0.005]
5A	HHCS, M12 X 20MM LG.	XB-HCS-M12-20-Z	2	0.03 [0.01]
6	Spring, Extension, Release Cam	XB-10563-1-P	1	0.09 [0.04]
8	Pin, Hook	XA-10485-1	1	0.29 [0.13]

FWAL KIT PARTS LIST				
ITEM	DESCRIPTION	PART NUMBER	QTY.	WEIGHT LBS [KG]
9A	LHSCS, M10 x 1.5 x 16mm Class 10.9	XB-02724-M	3	0.04 [0.02]
9B	LHSCS, .38"-16 x .75" Long	XB-02724-1	2	0.04 [0.02]
10	Spring, Extension, Inner Handle	XB-10489-P	1	0.23 [0.10]
11	Pin, Lock	XA-06344-AL	1	1.45 [0.66]
12	Spring, Extension, Outer Handle	XB-10490-P	1	0.32 [0.15]
13	Spring, Extension, Lock	XB-05843-1-P	1	0.16 [0.07]
14	Insert Keeper (RK-AL-A-L)	XA-10706-P	1	0.08 [0.04]
	Insert Keeper (RK-AL-A-L-MET)		2	0.08 [0.04]
15A	HHCS, M12 x 1.75mm x 40mm Class 10.9	XB-HCS-M12-40-Z	1	0.05 [0.02]
15B	HHCS, .50" - 20 X 1.75"	XB-2083	1	0.13 [0.06]
16	Washer, .53" I.D. x 2.25" O.D., Stainless Steel	XB-10294	2	0.11 [0.05]
17A	Roller, .49" I.D. x .68" O.D. x .53"Long	XA-10810	1	0.02 [0.01]
17B	Bushing, Release Cam	XA-10810-1	1	0.02 [0.01]
20	Retaining Ring, 1.38" Diameter	XB-08905	1	0.01 [0.005]
21	Tag, Operation (Service Part Only)	XB-10424-AL	1	N/A
22	Lock Nut, .50"-20 Gr C	XB-T-69-A	2	0.04 [0.02]
23A*	Release Handle	XA-AL-11384-P	1	3.00 [1.36]
23L*	Release Handle, Left-Hand, See RK-10495-AL-P	XA-10495-AL-P	1	2.51 [1.14]
24	Washer, .53" I.D. x 1.06" O.D., Hardened	XB-06378	2	0.02 [0.01]
26	Washer, .69" I.D. x 1.31" O.D.	XB-06180	1	0.04 [0.02]
30	Pickup, Air Cylinder	XA-11384-ALA	1	0.56 [0.25]
31	HHCS, .25"-20 X .63" Gr 5	XB-10775	3	0.02 [0.01]
32	Never-Seez, 7.5g Tube	XB-02967	1	N/A
36	Ring, Shim	XB-05859-2	2	0.01 [0.005]
52	HHCS, .50"-20 x 1.25" Gr 5	XB-C-95	2	0.11 [0.05]
79*	Front Lock Insert, See RK-AL-10680	XD-10680-P	1	0.67 [0.31]
87	Nut, Lock M12	XB-HLN-M12-Z	1	0.02 [0.01]

*Not sold individually - must be purchased in kit.

XL-FW10081PM-en-US Rev D 2016-01-01 Amendments and errors reserved. © SAF-HOLLAND, Inc.

ILS Style Fifth Wheel Assembly Part Numbers

General Holland prefix indicating complete fifth wheel assembly

SERIES	
AL	FWAL Series

MOUNTING STYLE	
NO.	DESCRIPTION
Standard Duty Sliders	
A	Outboard (1 pc tie-bar)
B	Inboard (Serrated 3 pc tie-bar)
C	Inboard (Straight 3 pc tie-bar) (DTNA Air Fitting)
F	Outboard (1 pc tie-bar)
H	Inboard (1 pc tie-bar for PACCAR)
J	Outboard (1 pc tie-bar for PACCAR)
Standard Duty Stationaries	
Z	Integrated Plate Mount
Y	Foot Mount
X	Bracket Castings Only (No Angle or Base Plate)
W	Brackets w/4" Vert. Leg Angle
Specialty Mounting Systems	
K	Kompensator
N	No-Tilt

HEIGHT (approx.)	
NO.	DESCRIPTION
6	6" (Stationary only)
7	7"
8	8"
9	9"
0	10"
1	11" (Komp only)
2	12.0" [305] (Komp only)
3	13" (Komp only)

FW AL X X XX X X XX

TRAVEL	
NO.	DESCRIPTION
00	Stationary
ILS Travel	
12	12"
18	18" (Only H & J) Mounting Style
24	24"
36	36"
48	48"
No-Tilt ILS Travel	
06	6"
18	18"
30	30"
42	42"
Kompensator Travel	
11	11"
17	17"
24	24"
41	41"
54	54"
66	66"

ANGLES	
NO.	DESCRIPTION
No Angle Mounting Systems	
W	Aftermarket Inboard No-Tilt & Komp (Serrated Edge)
X	Outboard Slider ***or*** Inboard Slider w/o Angles ***or*** Stationary w/o Angles
Y	Outboard No-Tilt & Komp
Z	OEM Inboard No-Tilt & Komp (straight edge)
Frame Width for Standard Duty Mounting Angles	
A	33.25"
B	33.38"
C	33.50"
D	33.62"
E	33.75
F	33.88"
G	34.00"
H	34.12"
J	34.25"
K	34.38"
L	34.50"

RELEASE HANDLE	
NO.	DESCRIPTION
L	Left-hand (Road-side)
R	Right-hand (Curb-side)

OPTION CODE*	
NO.	DESCRIPTION
00	No option
02	Manual Secondary Lock
24	Drilled & Tapped for Auto Lube
28	Dolly Release Handle
80	Air Release Top Plate
EL	Electronic Lock Indicator (ELI)
EA	ELI w/ Air Release Top Plate
8E	ELI w/Air Release Top Plate (PACCAR only)

 Amendments and errors reserved. © SAF-HOLLAND, Inc.

FWAL Stationary Foot Mount



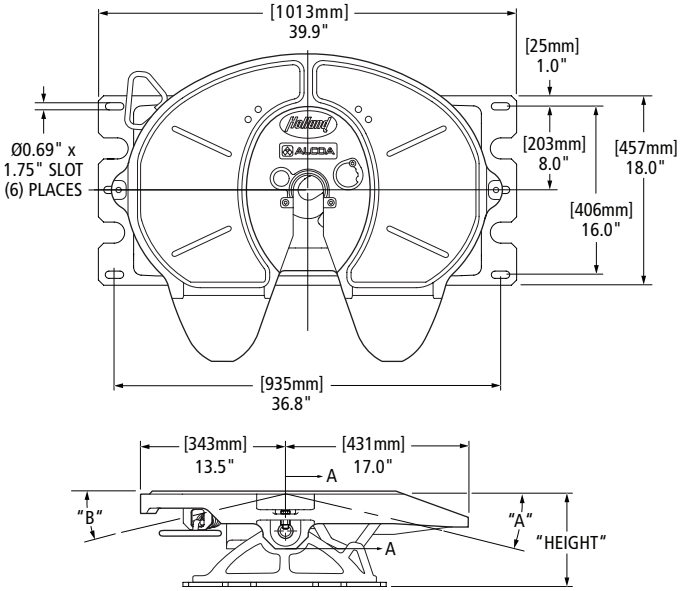

FW PART NUMBER (CAST BRACKET)	HEIGHT	A	B	REPLACEMENT BRACKETS**	FW WEIGHT LBS [KG]
FWALY600XL00	6.3"	7°	7°	RK-Y600	227.00 [102.97]
FWALY700XL00	7.3"	8°	8°	RK-Y700	233.00 [105.69]
FWALY800XL00	8.3"	10°	9°	RK-Y800	238.00 [107.95]
FWALY900XL00	9.3"	14°	13°	RK-Y900	243.00 [110.22]

** See bracket section for more information.

FWAL Stationary Integrated Plate Mount



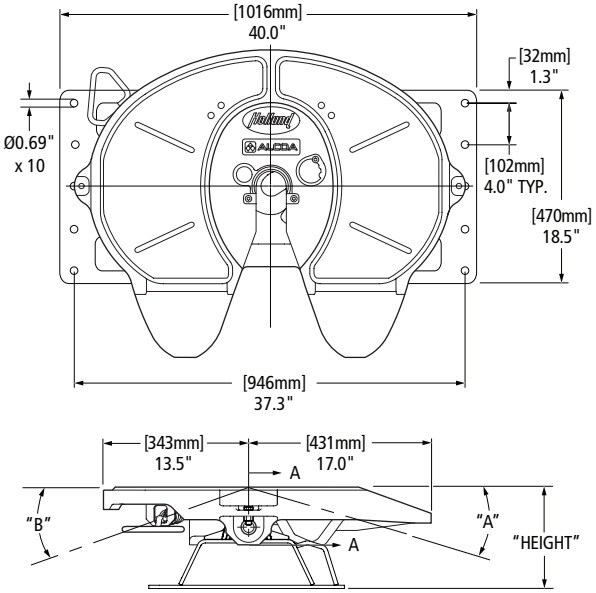

FW PART NUMBER (CAST BRACKET)	HEIGHT	A	B	REPLACEMENT BRACKETS**	FW WEIGHT LBS [KG]
FWALZ600XL00	6.3"	7°	7°	RK-Z600	243.00 [110.22]
FWALZ700XL00	7.3"	8°	8°	RK-Z700	251.00 [113.85]
FWALZ800XL00	8.3"	10°	9°	RK-Z800	258.00 [117.03]
FWALZ900XL00	9.3"	14°	13°	RK-Z900	254.00 [115.21]

** See bracket section for more information.

RK-AL-11798
Bracket Shim Kit
Qty. (4) Shims Included

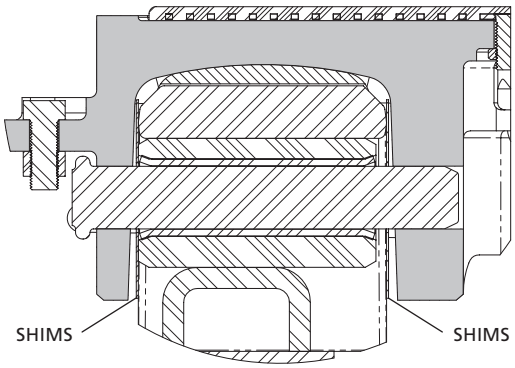

Section A-A
SHIMS TO BE INSTALLED ON BOTH SIDES OF EACH BRACKET CAP TYP

XL-FW10081PM-en-US Rev D 2016-03-01 Amendments and errors reserved. © SAF-HOLLAND, Inc.

FWAL Stationary Brackets for Angle Mounting

Also Available With Angle Later In This Section.



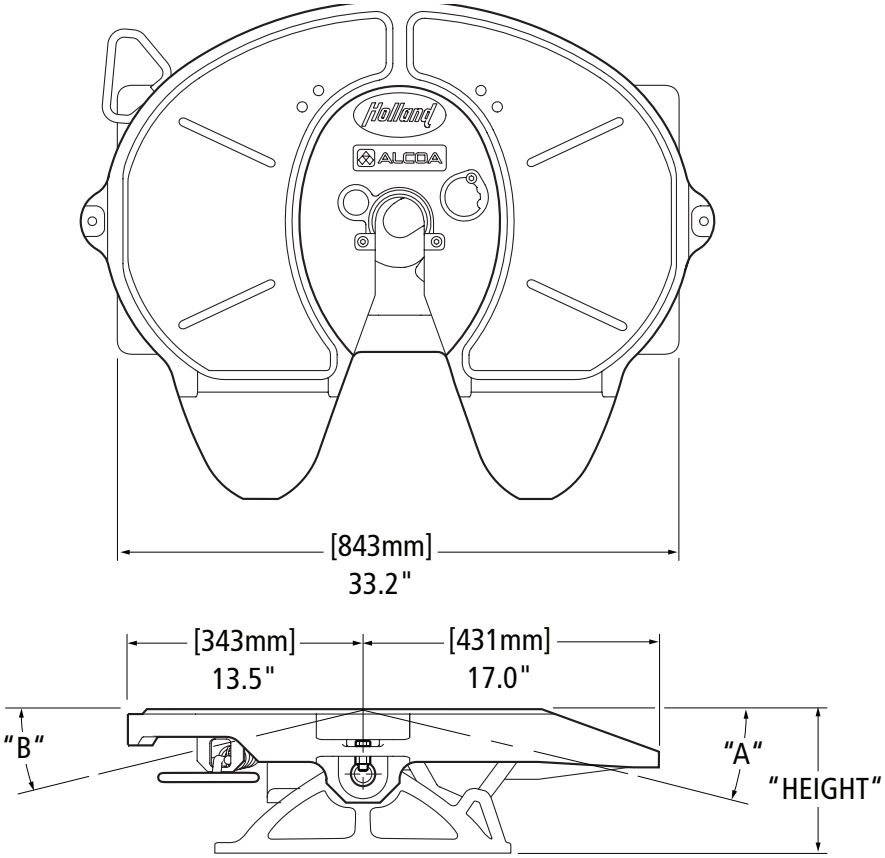

FW PART NUMBER (CAST BRACKET)	HEIGHT	A	B	REPLACEMENT BRACKETS**	FW WEIGHT LBS [KG]
FWALX600XL00	5.9"	7°	7°	RK-X600	198.00 [89.81]
FWALX700XL00	6.9"	8°	8°	RK-X700	204.00 [92.53]
FWALX800XL00	7.9"	10°	9°	RK-X800	209.00 [94.80]
FWALX900XL00	8.9"	14°	13°	RK-X900	214.00 [97.07]

** See bracket section for more information.

 Amendments and errors reserved. © SAF-HOLLAND, Inc.

FWAL Sliding ILS Outboard Mount



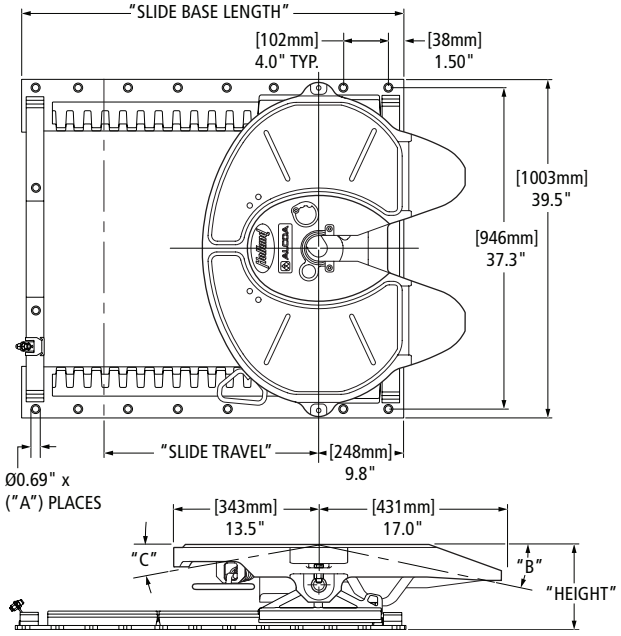

ILS FW PART NUMBER	HEIGHT	SLIDE TRAVEL	SLIDE BASE LENGTH	A # OF HOLES	B	C	REPLACEMENT SLIDE BASE AND BRACKET**	REPLACEMENT SLIDE BASE**	REPLACEMENT BRACKET**	FW WEIGHT LBS [KG]
FWALA712XL00	7.3"	12" [305]	31" [787]	16	8°	9°	XA-A712	XA-A12	RK-10689-1	347.00 [157.40]
FWALA724XL00		24" [610]	43" [1092]	22			XA-A724	XA-A24		381.00 [172.82]
FWALA736XL00		36" [914]	55" [1397]	28			XA-A736	XA-A36		414.00 [187.79]
FWALA748XL00		48" [1219]	67" [1702]	34			XA-A748	XA-A48		448.00 [203.21]
FWALA812XL00	8.3"	12" [305]	31" [787]	16	13°	18°	XA-A812	XA-A12	RK-10689-2	352.00 [159.66]
FWALA824XL00		24" [610]	43" [1092]	22			XA-A824	XA-A24		386.00 [175.09]
FWALA836XL00		36" [914]	55" [1397]	28			XA-A836	XA-A36		419.00 [190.06]
FWALA848XL00		48" [1219]	67" [1702]	34			XA-A848	XA-A48		453.00 [205.48]
FWALA912XL00	9.3"	12" [305]	31" [787]	16	15°	20°	XA-A912	XA-A12	RK-10689-3	356.00 [161.48]
FWALA924XL00		24" [610]	43" [1092]	22			XA-A924	XA-A24		390.00 [176.90]
FWALA936XL00		36" [914]	55" [1397]	28			XA-A936	XA-A36		423.00 [191.87]
FWALA948XL00		48" [1219]	67" [1702]	34			XA-A948	XA-A48		457.00 [207.29]

** See bracket section for more information.

XL-FW10081PM-en-US Rev D 2016-03-01 Amendments and errors reserved. © SAF-HOLLAND, Inc.

FWAL Sliding ILS Inboard Mount for Angle

Also Available With Angle Later In This Section.



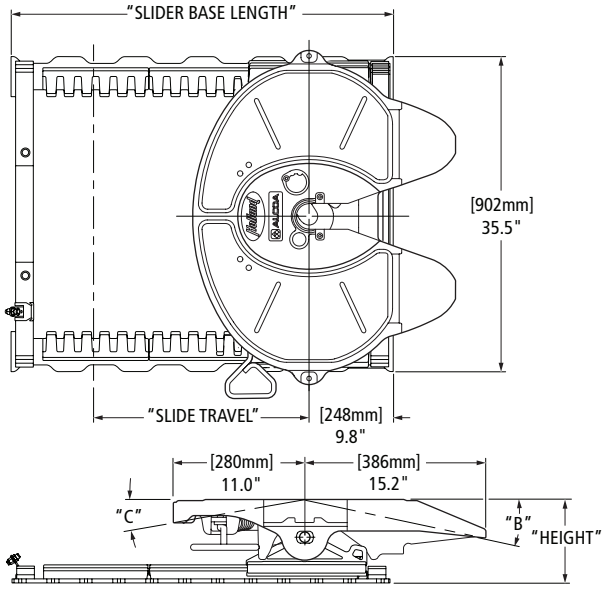

ILS FW PART NUMBER	HEIGHT	SLIDE TRAVEL	SLIDE BASE LENGTH	B	C	REPLACEMENT SLIDE BASE AND BRACKET**	REPLACEMENT SLIDE BASE**	REPLACEMENT BRACKETS**	FW WEIGHT LBS [KG]
FWALB712XL00	7.3"	12" [305]	31" [787]	8°	9°	XA-B712	XA-B12	RK-10689-1	331.00 [150.14]
FWALB724XL00		24" [610]	43" [1092]			XB-B724	XA-B24		359.00 [162.84]
FWALB736XL00		36" [914]	55" [1397]			XA-B736	XA-B36		387.00 [175.54]
FWALB748XL00		48" [1219]	67" [1702]			XA-B748	XA-B48		415.00 [188.24]
FWALB812XL00	8.3"	12" [305]	31" [787]	13°	18°	XA-B812	XA-B12	RK-10689-2	335.00 [151.95]
FWALB824XL00		24" [610]	43" [1092]			XA-B824	XA-B24		363.00 [164.65]
FWALB836XL00		36" [914]	55" [1397]			XA-B836	XA-B36		391.00 [177.35]
FWALB848XL00		48" [1219]	67" [1702]			XA-B848	XA-B48		419.00 [190.06]
FWALB912XL00	9.3"	12" [305]	31" [787]	15°	20°	XA-B912	XA-B12	RK-10689-3	339.00 [153.77]
FWALB924XL00		24" [610]	43" [1092]			XA-B924	XA-B24		367.00 [166.47]
FWALB936XL00		36" [914]	55" [1397]			XA-B936	XA-B36		395.00 [179.17]
FWALB948XL00		48" [1219]	67" [1702]			XA-B948	XA-B48		423.00 [191.87]

** See bracket section for more information.

 Amendments and errors reserved. © SAF-HOLLAND, Inc.

FWAL Sliding Traditional Outboard Mount

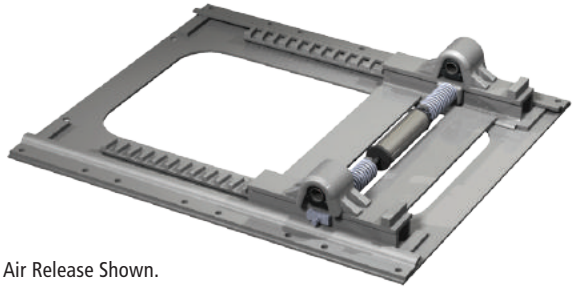

Air Release Shown.

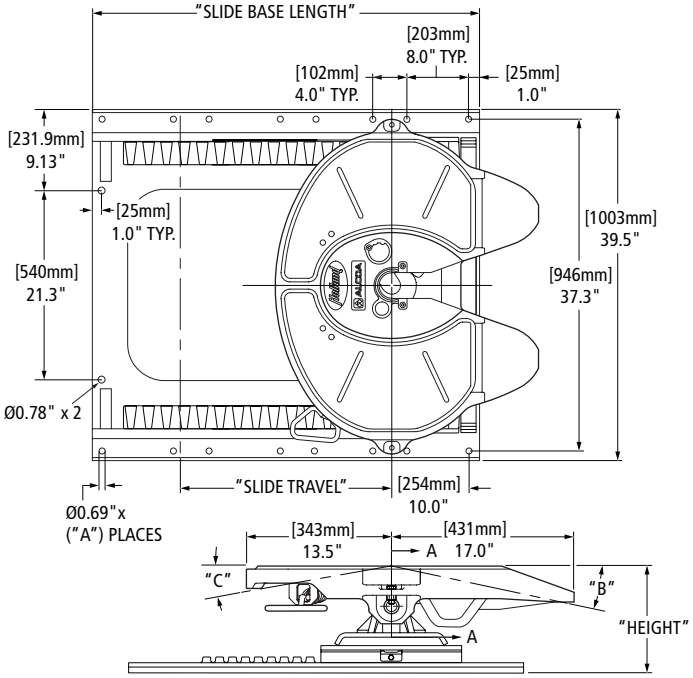

LEGACY FW PART NUMBER*	REPLACED BY ILS FW PART NUMBER	SLIDE BRACKET TYPE	HEIGHT	SLIDE TRAVEL	SLIDE BASE LENGTH	A # OF HOLES	B	C	REPLACEMENT SLIDE BASE AND BRACKET**	REPLACEMENT SLIDE BASE**	REPLACEMENT BRACKETS**	FW WEIGHT LBS [KG]
FWAL-8002T3L00	FWALA824XL00	Air Release	8.3"	24.5" [622]	46.2" [1173]	16	12°	15°	XA-8002-T3	XA-07871-3	XA-7002	418.00 [189.60]
FWAL-8009T2L00	—		10.8"	13.8" [351]	42.2" [1072]	16	21°	22°	XA-8301-T1	XA-07871-2	XA-7009	444.00 [201.40]
FWAL-8009T3L00	—			19.9" [505]	46.2" [1173]	16			XA-8301-T2	XA-07871-3		457.00 [207.29]

* No longer available if replacement exists.
** See bracket section for more information.

RK-AL-11798
Bracket Shim Kit
Qty. (4) Shims Included

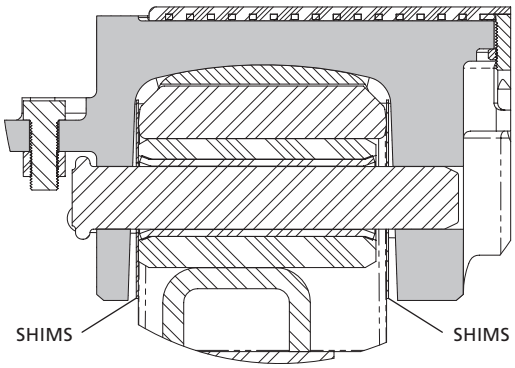

Section A-A
SHIMS TO BE INSTALLED ON BOTH SIDES OF EACH BRACKET CAP TYP

XL-FW10081PM-en-US Rev D 2016-03-01 Amendments and errors reserved. © SAF-HOLLAND, Inc.

FWAL Stationary Brackets with Angle Mount



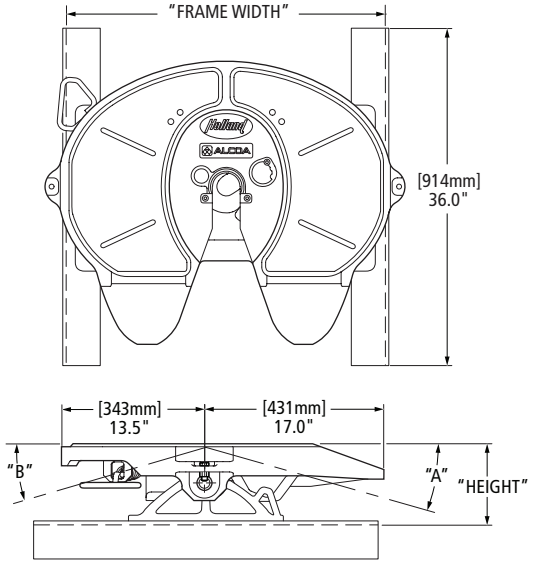

Frame width "A-G": .38" x 4" x 4" angle
"H-N": .38" x 4" x 6" angle

FW PART NUMBER CAST BRACKET	HEIGHT	A	B	REPLACEMENT BRACKETS**	FW WEIGHT LBS [KG]
FWALW600GL00	6.3"	7°	7°	RK-W600-G	256.00 [116.12]
FWALW700GL00	7.3"	8°	8°	RK-W700-G	262.00 [118.84]
FWALW800GL00	8.3"	10°	9°	RK-W800-G	267.00 [121.11]
FWALW900GL00	9.3"	14°	13°	RK-W900-G	272.00 [123.38]

** See bracket section for more information.

CODE LETTER	FRAME WIDTH	CODE LETTER	FRAME WIDTH	CODE LETTER	FRAME WIDTH
A	33.25"	F	33.88"	L	34.50"
B	33.38"	G†	34.00"	M	34.62"
C	33.50"	H	34.12"	N	34.75"
D	33.62"	J	34.25"		
E	33.75"	K	34.38"		

† Standard

 Amendments and errors reserved. © SAF-HOLLAND, Inc.

SAF-HOLLAND Group

FWAL Sliding ILS Inboard with Angle Mount

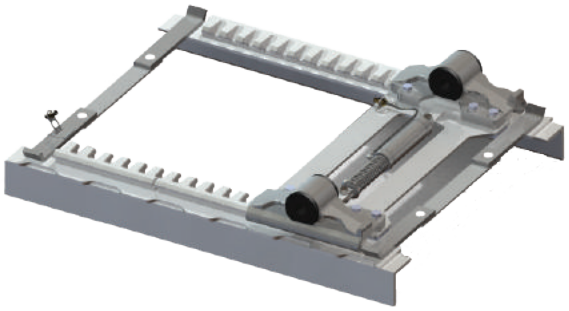

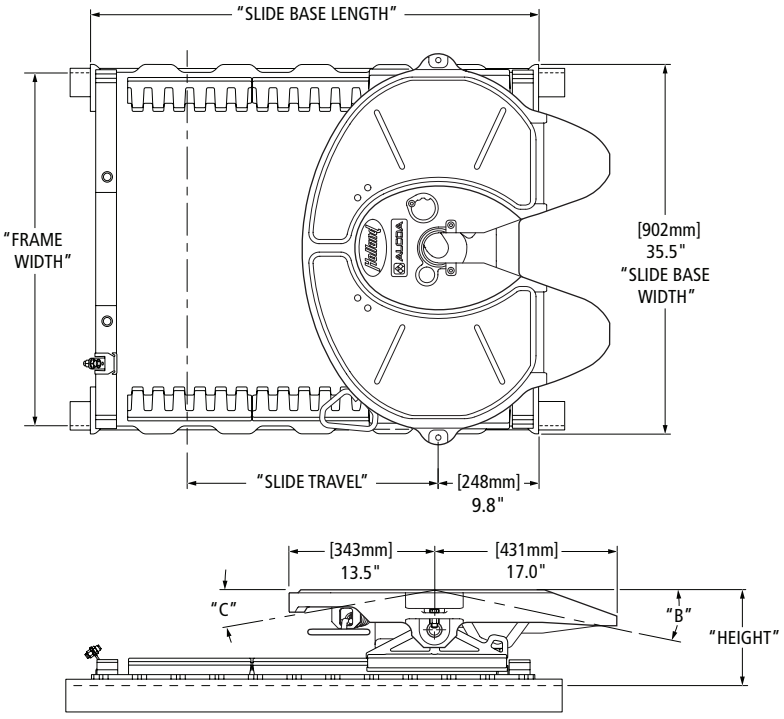

Frame width "A-C": .38" x 3" x 4" angle
"D-K": .38" x 3.5" x 4" angle
"K-Q": .38" x 4" x 4" angle

FRAME WIDTH CODE CHART					
CODE	FRAME WIDTH	CODE	FRAME WIDTH	CODE	FRAME WIDTH
A	33.25"	F	33.88"	L	34.50"
B	33.38"	G†	34.00"	M	34.62"
C	33.50"	H	34.12"	N	34.75"
D	33.62"	J	34.25"	P	34.88"
E	33.75"	K	34.38"	Q	35.00"

† Standard

FW PART NUMBER	HEIGHT	SLIDE TRAVEL	SLIDE BASE LENGTH	B	C	REPLACEMENT SLIDE BASE AND BRACKET**	REPLACEMENT SLIDE BASE **	REPLACEMENT BRACKET**	FW WEIGHT LBS [KG]
FWALB712GL00	7.7" [196]	12" [305]	31" [787]	8°	9°	XA-B712G	XA-B12G	RK-10689-1	383.00 [173.73]
FWALB724GL00		24" [610]	43" [1092]			XA-B724G	XA-B24G	RK-10689-1	429.00 [194.59]
FWALB736GL00		36" [914]	55" [1397]			XA-B736G	XA-B36G	RK-10689-1	475.00 [215.46]
FWALB748GL00		48" [1219]	67" [1702]			XA-B748G	XA-B48G	RK-10689-1	521.00 [236.32]
FWALB812GL00	8.7" [221]	12" [305]	31" [787]	13°	18°	XA-B812G	XA-B12G	RK-10689-2	388.00 [175.99]
FWALB824GL00		24" [610]	43" [1092]			XA-B824G	XA-B24G	RK-10689-2	434.00 [196.86]
FWALB836GL00		36" [914]	55" [1397]			XA-B836G	XA-B36G	RK-10689-2	480.00 [217.72]
FWALB848GL00		48" [1219]	67" [1702]			XA-B848G	XA-B48G	RK-10689-2	526.00 [238.59]
FWALB912GL00	9.7" [246]	12" [305]	31" [787]	15°	20°	XA-B912G	XA-B12G	RK-10689-3	392.00 [177.81]
FWALB924GL00		24" [610]	43" [1092]			XA-B924G	XA-B24G	RK-10689-3	438.00 [198.67]
FWALB936GL00		36" [914]	55" [1397]			XA-B936G	XA-B36G	RK-10689-3	484.00 [219.54]
FWALB948GL00		48" [1219]	67" [1702]			XA-B948G	XA-B48G	RK-10689-3	530.00 [240.40]

** See bracket section for more information.

XL-FW10081PM-en-US Rev D 2016-03-01 Amendments and errors reserved. © SAF-HOLLAND, Inc.

THIS PAGE INTENTIONALLY LEFT BLANK

 Amendments and errors reserved. © SAF-HOLLAND, Inc.

SAF-HOLLAND Group

Discontinued - Replacement Parts Only

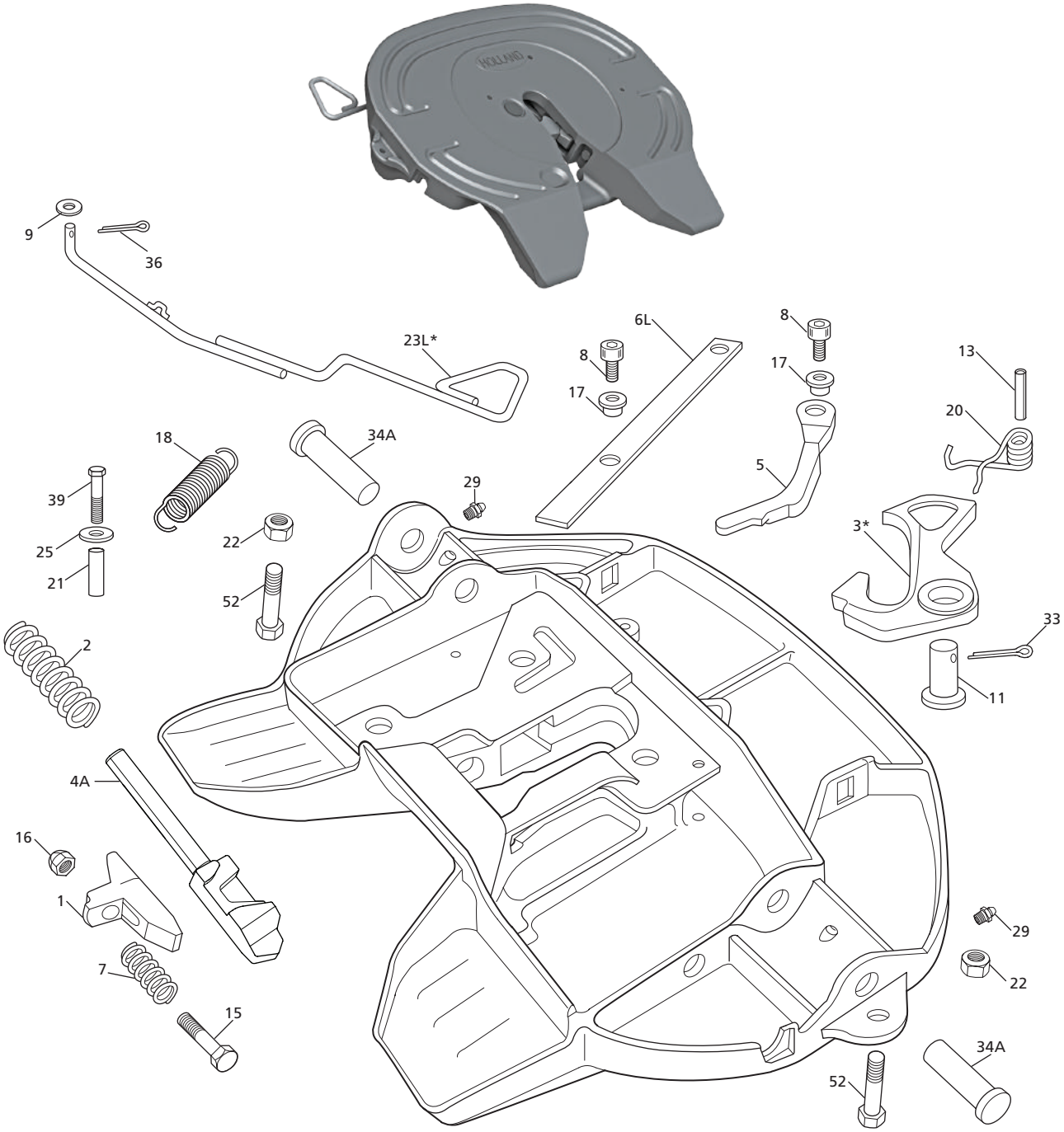

FOR RIGHT HAND RELEASE

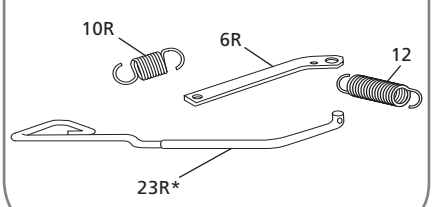

MODELS EQUIPPED WITH MANUAL SECONDARY LOCKS

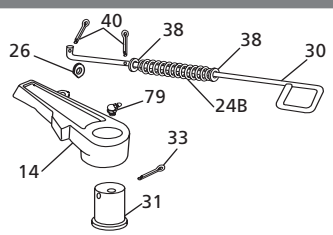

FOR AIR RELEASE MODELS

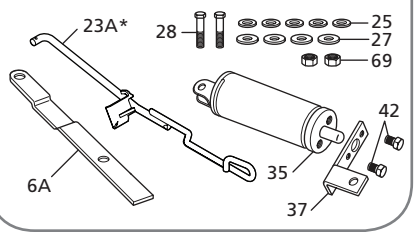

XL-FW10081PM-en-US Rev D 2016-03-01 Amendments and errors reserved. © SAF-HOLLAND, Inc.

FW8 PARTS LIST

ITEM	DESCRIPTION	PART NUMBER	QTY.	WEIGHT LBS [KG]
1	Wedge, Adjusting	XD-06328	1	1.65 [0.75]
2	Spring, Plunger	XB-06330	1	0.81 [0.37]
3*	Lock, Hinged	XA-09416	1	5.67 [2.57]
4A	Plunger, Locking, For Models MFG. After 9/1/99	XE-10474	1	6.02 [2.73]
5	Cam Arm	XE-09415	1	1.98 [0.90]
6A	Release Arm, Air	XA-10149	1	2.00 [0.91]
6L	Release Arm, Left-Hand	XA-09514	1	2.23 [1.01]
6R	Release Arm, Right-Hand	XA-09580	1	2.65 [1.20]
7	Spring, Compression	XB-09495	1	0.15 [0.07]
8	SHCS, .50"-13 x .75" Long	XB-08558	2	0.09 [0.04]
9	Washer, .66" I.D. x 1.31" O.D.	XB-T-199	1	0.03 [0.01]
10L	Spring, Extension, Left-Hand and Air	XB-09408	1	0.11 [0.05]
10R	Spring, Extension, Right-Hand, Inner	XB-09629	1	0.08 [0.04]
11	Pin, Lock	XA-06344	1	1.44 [0.65]
12	Spring, Extension, Right-Hand, Outer	XB-09581	1	0.28 [0.13]
13	Pin, Spring, .50" Dia. x 2.75" Long	XB-21-S-500-2750	1	0.02 [0.01]
14	Lock, Manual Secondary	XA-06349	1	2.57 [1.17]
15	HHCS, .63"-11 x 4.25" GR 8	XB-06329-1	1	0.45 [0.20]
16	Lock Nut, .63"-11	XB-06179-2	1	0.09 [0.04]
17	Roller, .51" I.D. x 1" O.D. x .69"Long	XA-08162	2	0.10 [0.05]
18	Spring, Extension, Left-Hand	XB-09517-1	1	0.17 [0.08]
19	Block Stop, Wedge	XA-09590	1	2.75 [1.25]
20	Spring, Lock Return	XB-08764	1	0.12 [0.06]
21	Spacer	XA-09558	1	0.06 [0.03]
22	Lock Nut, .50"-20 GR C	XB-T-69-A	2	0.04 [0.02]
23A*	Release Handle, Air Release	XA-10161	1	2.81 [1.27]
23L*	Release Handle, Left-Hand, See RK-09557	XA-09484	1	2.82 [1.28]
23R*	Release Handle, Right-Hand, See RK-09556	XA-09632	1	2.32 [1.05]
24B	Spring, Manual Release	XB-1028-1	1	0.10 [0.04]
25	Washer, .44" I.D. x 1.03" O.D., Left-Hand	XB-1108	1	0.02 [0.01]
	Washer, .44" I.D. x 1.03" O.D., Air Release		5	0.02 [0.01]
26	Washer, .41" I.D. x .81" O.D., Clipped	XB-PWC-38-78	1	0.01 [0.005]
27	Washer, .56" I.D. x 1.38" O.D.	XB-T-49	4	0.04 [0.02]
28	HHCS, .38"-16 x 1.75" GR 5	XB-V-444-3	2	0.06 [0.03]
29	Grease Zerk	XB-H-38	2	0.01 [0.005]
30	Release Handle, Lock, Manual Secondary	XA-06345	1	0.94 [0.43]
31	Pin, Lock, Manual Secondary	XA-1016-C	1	0.92 [0.42]
33	Pin, Cotter, .25" x 2" Long	XB-5	1	0.05 [0.02]
34A	Pin, Bracket	XE-06356-P	2	1.98 [0.90]
35	Air Cylinder	XA-2524-17	1	5.00 [2.27]
36	Pin, Cotter, .19" x 1.25" Long	XB-06336	1	0.01 [0.005]
37	Bracket, Air Cylinder	XA-10164	1	0.28 [0.13]
38	Washer, .50" I.D. x 1.28" O.D., Manual Secondary	XB-1204	4	0.03 [0.01]
39	HHCS, .38"-16 x 2.25" GR 5	XB-C-38-C-214	1	0.09 [0.04]

FW8 PARTS LIST

ITEM	DESCRIPTION	PART NUMBER	QTY.	WEIGHT LBS [KG]
40	Pin, Cotter, .13" Dia. x 1" Long	XB-06377	2	0.01 [0.005]
42	HHCS, .25"-28 x .50" GR 5	XB-01611	2	0.01 [0.005]
52	HHCS, .50"-20 x 1.25" GR 5	XB-C-95	2	0.11 [0.05]
69	Lock Nut, .38"-16 GR B	XB-338	2	0.02 [0.01]
79	Fittings, Grease, 45°	XB-767-C	1	0.01 [0.005]

*Not sold individually - must be purchased in kit.

NOTE: See Accessories Section for Air Release and No-Tilt Kits.

REPLACEMENT TOP PLATE PART NUMBERS

PART NUMBER	DESCRIPTION
XA-201-A-P	Right-Hand Release with Pins
XA-201-A-L-P	Left-Hand Release with Pins
XA-201-A-06-L-P	No-Tilt Left-Hand Release with Pins
XA-201-A-02-P	Manual Secondary Lock Right-Hand Release with Pins
XA-201-A-02-L-P	Manual Secondary Lock Left-Hand Release with Pins
XA-201-A-14-P	Right-Hand Release with Grease Fittings and Pins
XA-201-A-14-L-P	Left-Hand Release with Grease Fittings and Pins

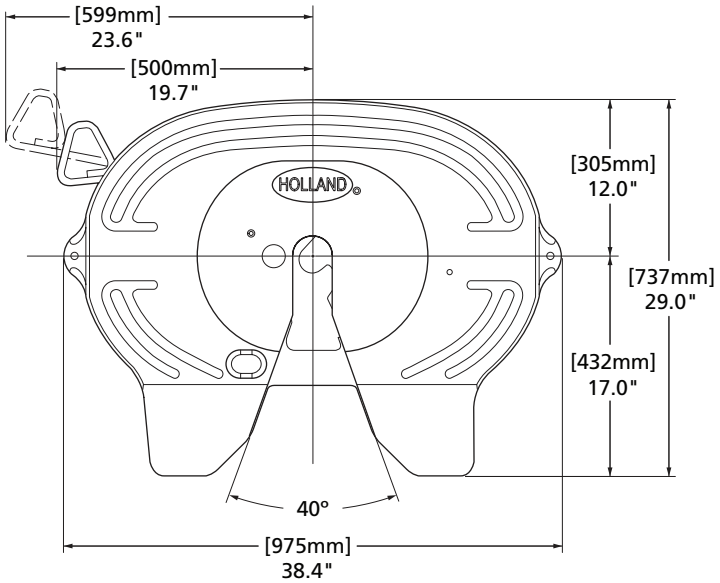

For XA-201 fifth wheel rebuild procedures, see Holland publication XL-FW355-03 at www.safholland.us

 Amendments and errors reserved. © SAF-HOLLAND, Inc.

RK-09590-W
Wedge Stop and Plunger

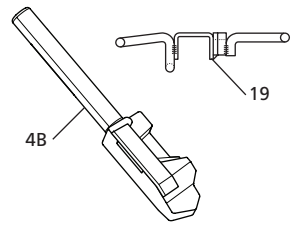

RK-06973-1
Pocket Inserts

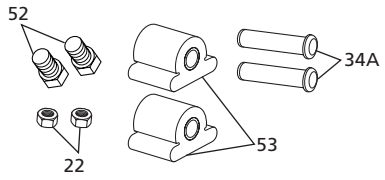

RK-09557
Release Handle Left-Hand - Gen III

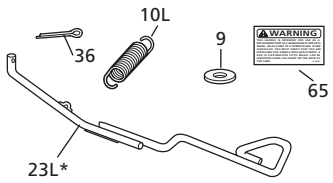

RK-09556
Release Handle Right-Hand

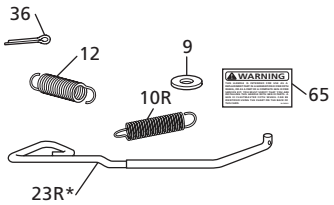

RK-09487
Release Handle, Left-hand - Long Handle

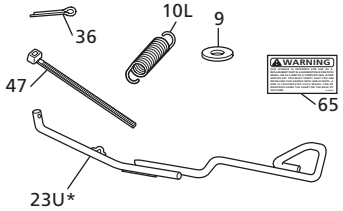

RK-09429
Release Handle Left-Hand - Gen II

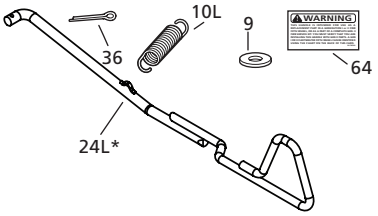

FW8 KIT PARTS LIST

ITEM	DESCRIPTION	PART NUMBER	QTY.	WEIGHT LBS [KG]
4B	Plunger, Locking, Models Manufactured Prior to 9/1/99	XA-10474	1	5.24 [2.38]
9	Washer, .66" I.D. x 1.31" O.D.	XB-T-199	1	0.03 [0.01]
10L	Spring, Extension, Left-Hand & Air	XB-09408	1	0.11 [0.05]
10R	Spring, Extension, Handle, Inner, Right Hand	XB-09629	1	0.08 [0.04]
12	Spring, Extension, Handle, Outer, Right Hand	XB-09581	1	0.28 [0.13]
19	Wedge Block Stop	XA-09590	1	2.75 [1.25]
22	Lock Nut, .50"-20 GR C	XB-T-69-A	2	0.04 [0.02]
23L*	Release Handle, Left-Hand	XA-09484	1	2.82 [1.28]
23R*	Release Handle, Right-Hand	XA-09632	1	2.32 [1.05]
23U*	Release Handle, Left-Hand, Long Handle	XA-09487	1	3.15 [1.43]
24L*	Release Handle, Left Hand	XA-09409	1	2.92 [1.32]
34A	Pin, Bracket	XE-06356-P	2	1.98 [0.90]
36	Pin, Cotter, .19" Dia. x 1.25" Long	XB-06336	1	0.01 [0.005]
47	Nylon Cable Ties	XB-01961	1	0.01 [0.005]
52	HHCS, .50"-20 x 1.25" GR 5	XB-C-95	2	0.11 [0.05]
53	Cushion, Rubber	XB-0011-2	2	0.60 [0.27]
64	Tag, Warning	XL-FW360	1	N/A
65	Tag, Warning	XL-FW361	1	N/A

*Not sold individually - must be purchased in kit.

XL-FW10081PM-en-US Rev D 2016-03-01 Amendments and errors reserved. © SAF-HOLLAND, Inc.

RK-201-A3-L
Complete Rebuild, Left-Hand Release, Mfg. After 9/1/99

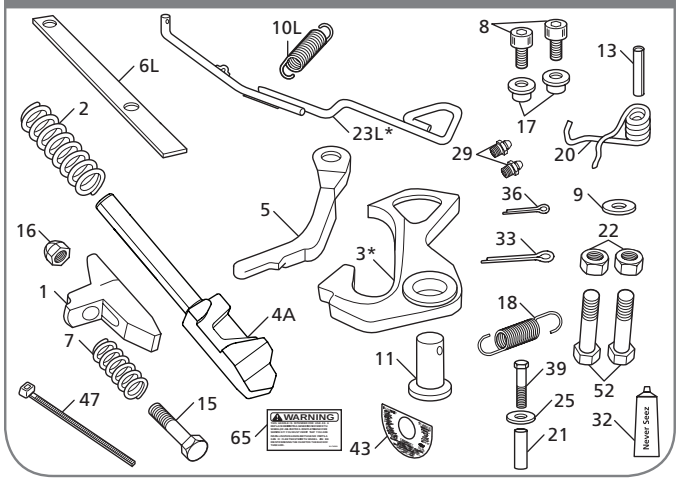

RK-201-A3-L-W
Complete Rebuild, Left-Hand Release, Mfg. Prior 9/1/99

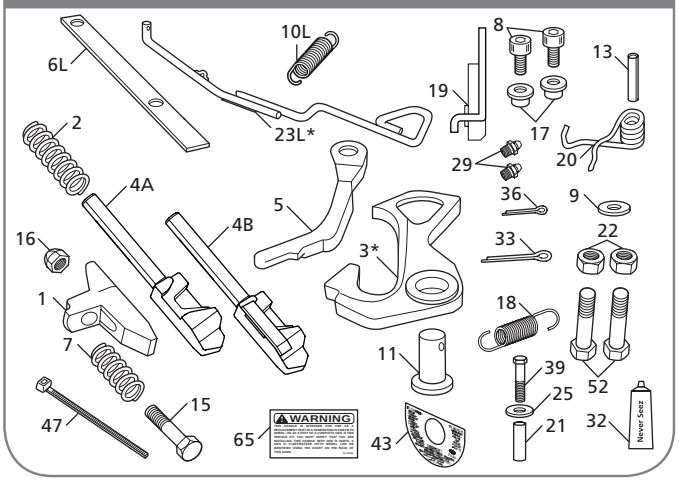

FW8 KIT PARTS LIST

ITEM	DESCRIPTION	PART NUMBER	QTY.	WEIGHT LBS [KG]
1	Wedge, Adjusting	XD-06328	1	1.65 [0.75]
2	Spring, Plunger	XB-06330	1	0.81 [0.37]
3*	Lock, Hinged	XA-09416	1	5.67 [2.57]
4A	Plunger, Locking, Models Manufactured after 9/1/99	XE-10474	1	6.02 [2.73]
4B	Plunger, Locking, Models Manufactured prior to 9/1/99	XA-10474	1	5.24 [2.38]
5	Arm, Cam	XE-09415	1	1.98 [0.90]
6L	Release Arm, Left-Hand	XA-09514	1	2.23 [1.01]
7	Spring, Manual Release	XB-09495	1	0.15 [0.07]
8	SHCS, .50"-13 x .75" Long	XB-08558	2	0.09 [0.04]
9	Washer, .66" I.D. x 1.31" O.D.	XB-T-199	1	0.03 [0.01]
10L	Spring, Extension, Left-Hand & Air	XB-09408	1	0.11 [0.05]
11	Pin, Lock	XA-06344	1	1.44 [0.65]
13	Pin, Spring, .50" Dia. x 2.75" Long	XB-21-S-500-2750	1	0.02 [0.01]
15	HHCS, .63"-11 x 4.25" Gr 8	XB-06329-1	1	0.45 [0.20]
16	Lock Nut, .63"-11	XB-06179-2	1	0.09 [0.04]
17	Roller, .51" I.D. x 1" O.D. x .69" Long	XA-08162	2	0.10 [0.05]

FW8 KIT PARTS LIST

ITEM	DESCRIPTION	PART NUMBER	QTY.	WEIGHT LBS [KG]
18	Spring, Extension, Left-Hand	XB-09517-1	1	0.17 [0.08]
19	Wedge Block Stop	XA-09590	1	2.75 [1.25]
20	Spring, Lock Return	XB-08764	1	0.12 [0.06]
21	Spacer	XA-09558	1	0.06 [0.03]
22	Lock Nut, .50"-20 Gr C	XB-T-69-A	2	0.04 [0.02]
23L*	Release Handle, Left-Hand, See RK-09557	XA-09484	1	2.82 [1.28]
25	Washer, .44" I.D. x 1.03" O.D.	XB-1108	1	0.02 [0.01]
29	Fittings, Grease	XB-H-38	2	0.01 [0.005]
32	Never-Seez, 7.5g Tube	XB-02967	1	N/A
33	Pin, Cotter, .25" Dia. x 2" Long	XB-5	1	0.05 [0.02]
36	Pin, Cotter, .19" Dia. x 1.25" Long	XB-06336	1	0.01 [0.005]
39	HHCS, .38"-16 x 2.25" Gr 5	XB-C-38-C-214	1	0.09 [0.04]
43	Tag, Operation (Service Part Only)	XB-06936	1	N/A
47	Nylon Cable Ties, See RK-09646 and RK-06535	XB-01961	1	0.01 [0.005]
52	HHCS, .50"-20 x 1.25" Gr 5	XB-C-95	2	0.11 [0.05]
65	Tag, Warning	XL-FW361	1	N/A

*Not sold individually - must be purchased in kit.

 Amendments and errors reserved. © SAF-HOLLAND, Inc.

SAF-HOLLAND Group

RK-201-A3
Complete Rebuild, Right-Hand Release, Mfg. After 9/1/99

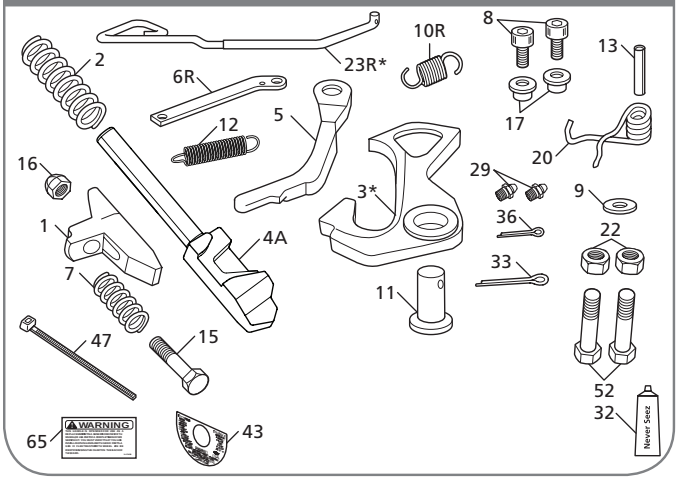

RK-201-A3-W
Complete Rebuild, Right-Hand Release, Mfg. Prior 9/1/99

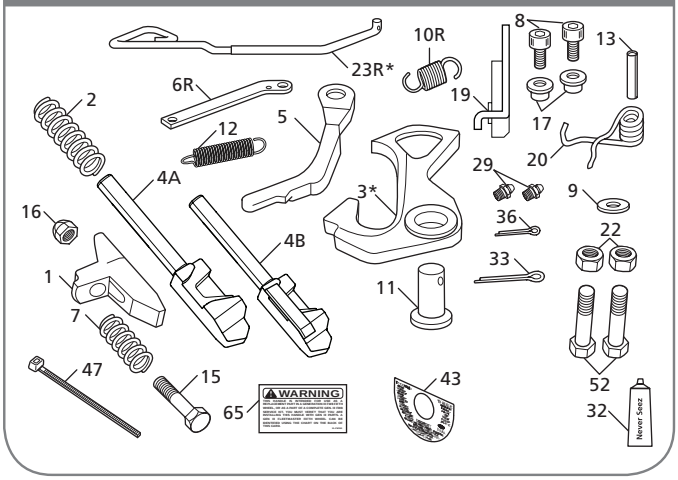

FW8 KIT PARTS LIST

ITEM	DESCRIPTION	PART NUMBER	QTY.	WEIGHT LBS [KG]
1	Wedge, Adjusting	XD-06328	1	1.65 [0.75]
2	Spring, Plunger	XB-06330	1	0.81 [0.37]
3*	Lock, Hinged	XA-09416	1	5.67 [2.57]
4A	Plunger, Locking, Models Manufactured after 9/1/99	XE-10474	1	6.02 [2.73]
4B	Plunger, Locking, Models Manufactured prior to 9/1/99	XA-10474	1	5.24 [2.38]
5	Arm, Cam	XE-09415	1	1.98 [0.90]
6R	Release Arm, Right-Hand	XA-09580	1	2.65 [1.20]
7	Spring, Manual Release	XB-09495	1	0.15 [0.07]
8	SHCS, .50"-13 x .75" Long	XB-08558	2	0.09 [0.04]
9	Washer, .66" I.D. x 1.31" O.D.	XB-T-199	1	0.03 [0.01]
10R	Spring, Extension, Handle, Inner, Right Hand	XB-09629	1	0.08 [0.04]
11	Pin, Lock	XA-06344	1	1.44 [0.65]
12	Spring, Extension, Handle, Outer, Right Hand	XB-09581	1	0.28 [0.13]
13	Pin, Spring, .50" Dia. x 2.75" Long	XB-21-S-500-2750	1	0.02 [0.01]

FW8 KIT PARTS LIST

ITEM	DESCRIPTION	PART NUMBER	QTY.	WEIGHT LBS [KG]
15	HHCS, .63"-11 x 4.25" Gr 8	XB-06329-1	1	0.45 [0.20]
16	Lock Nut, .63" -11"	XB-06179-2	1	0.09 [0.04]
17	Roller, .51" I.D. x 1" O.D. x .69" Long	XA-08162	2	0.10 [0.05]
19	Wedge Block Stop	XA-09590	1	2.75 [1.25]
20	Spring, Lock Return	XB-08764	1	0.12 [0.06]
22	Lock Nut, .50"-20 Gr C	XB-T-69-A	2	0.04 [0.02]
23R*	Release Handle, Right-Hand, See RK-09556	XA-09632	1	2.32 [1.05]
29	Fittings, Grease	XB-H-38	2	0.01 [0.005]
32	Never-Seez, 7.5g Tube	XB-02967	1	N/A
33	Pin, Cotter, .25" Dia. x 2" Long	XB-5	1	0.05 [0.02]
36	Pin, Cotter, .19" Dia. x 1.25" Long	XB-06336	1	0.01 [0.005]
43	Tag, Operation (Service Part Only)	XB-06936	1	N/A
47	Nylon Cable Ties	XB-01961	1	0.01 [0.005]
52	HHCS, .50"-20 x 1.25" Gr 5	XB-C-95	2	0.11 [0.05]
65	Tag, Warning	XL-FW361	1	N/A

*Not sold individually - must be purchased in kit.

 Amendments and errors reserved. © SAF-HOLLAND, Inc.

RK-201-A3-02-L
Complete Rebuild, Secondary Lock, Left-Hand Release, Mfg. After 9/1/99

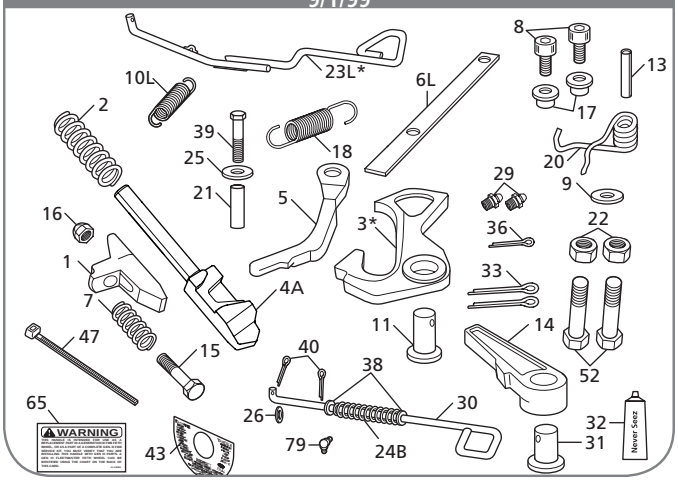

RK-201-A3-02-L-W
Complete Rebuild, Secondary Lock, Left-Hand Release, Mfg. Prior 9/1/99

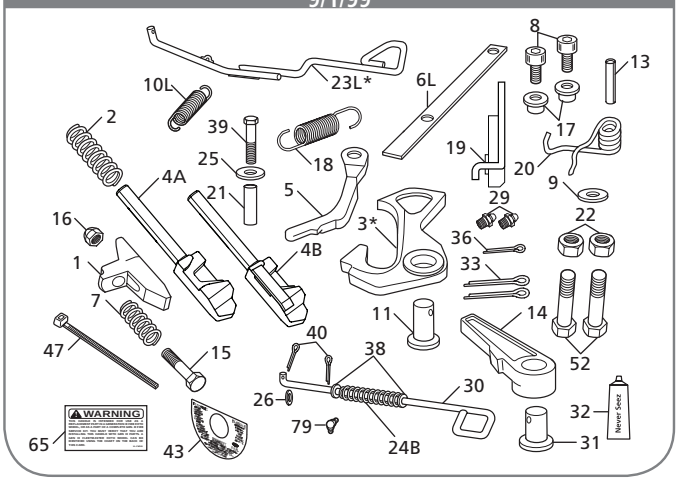

FW8 KIT PARTS LIST

ITEM	DESCRIPTION	PART NUMBER	QTY.	WEIGHT LBS [KG]
1	Wedge, Adjusting	XD-06328	1	1.65 [0.75]
2	Spring, Plunger	XB-06330	1	0.81 [0.37]
3*	Lock, Hinged	XA-09416	1	5.67 [2.57]
4A	Plunger, Locking, Models Manufactured after 9/1/99	XE-10474	1	6.02 [2.73]
4B	Plunger, Locking, Models Manufactured prior to 9/1/99	XA-10474	1	5.24 [2.38]
5	Arm, Cam	XE-09415	1	1.98 [0.90]
6L	Release Arm, Left-Hand	XA-09514	1	2.23 [1.01]
7	Spring, Manual Release	XB-09495	1	0.15 [0.07]
8	SHCS, .50"-13 x .75" Long	XB-08558	2	0.09 [0.04]
9	Washer, .66" I.D. x 1.31" O.D.	XB-T-199	1	0.03 [0.01]
10L	Spring, Extension, Left-Hand & Air	XB-09408	1	0.11 [0.05]
11	Pin, Lock	XA-06344	1	1.44 [0.65]
13	Pin, Spring, .50" Dia. x 2.75" Long	XB-21-S-500-2750	1	0.02 [0.01]
14	Lock, Manual Secondary	XA-06349	1	2.57 [1.17]
15	HHCS, .63"-11 x 4.25" Gr 8	XB-06329-1	1	0.45 [0.20]
16	Lock Nut, .63"-11	XB-06179-2	1	0.09 [0.04]
17	Roller, .51" I.D. x 1" O.D. x .69" Long	XA-08162	2	0.10 [0.05]
18	Spring, Extension, Left-Hand	XB-09517-1	1	0.17 [0.08]
19	Wedge Block Stop	XA-09590	1	2.75 [1.25]
20	Spring, Lock Return	XB-08764	1	0.12 [0.06]
21	Spacer	XA-09558	1	0.06 [0.03]

FW8 KIT PARTS LIST

ITEM	DESCRIPTION	PART NUMBER	QTY.	WEIGHT LBS [KG]
22	Lock Nut, .50"-20 Gr C	XB-T-69-A	2	0.04 [0.02]
23L*	Release Handle, Left-Hand, See RK-09557	XA-09484	1	2.82 [1.28]
24B	Spring, Manual Release	XB-1028-1	1	0.10 [0.04]
25	Washer, .44" I.D. x 1.03" O.D., Left Hand	XB-1108	1	0.02 [0.01]
26	Washer, Clipped, .41" I.D. x .81" O.D."	XB-PWC-38-78	1	0.01 [0.005]
29	Fittings, Grease	XB-H-38	2	0.01 [0.005]
30	Release Handle, Manual Secondary Lock	XA-06345	1	0.94 [0.43]
31	Pin, Manual Secondary Lock	XA-1016-C	1	0.92 [0.42]
32	Never-Seez, 7.5g Tube	XB-02967	1	N/A
33	Pin, Cotter, .25" Dia. x 2" Long	XB-5	2	0.05 [0.02]
36	Pin, Cotter, .19" Dia. x 1.25" Long	XB-06336	1	0.01 [0.005]
38	Washer, .50" I.D. x 1.28" O.D.	XB-1204	2	0.03 [0.01]
39	HHCS, .38"-16 x 2.25" Gr 5	XB-C-38-C-214	1	0.09 [0.04]
40	Pin, Cotter, .13" Dia. x 1" Long	XB-06377	2	0.01 [0.005]
43	Tag, Operation (Service Part Only)	XB-06936	1	N/A
47	Nylon Cable Ties	XB-01961	1	0.01 [0.005]
52	HHCS, .50" -20 x 1.25" Gr 5	XB-C-95	2	0.11 [0.05]
65	Tag, Warning	XL-FW361	1	N/A
79	Fittings, Grease 45°	XB-767-C	1	0.01 [0.005]

*Not sold individually - must be purchased in kit.

 Amendments and errors reserved. © SAF-HOLLAND, Inc.

SAF-HOLLAND Group

RK-201-A3-02
Complete Rebuild, Secondary Lock, Right-Hand, Mfg. After 9/1/99

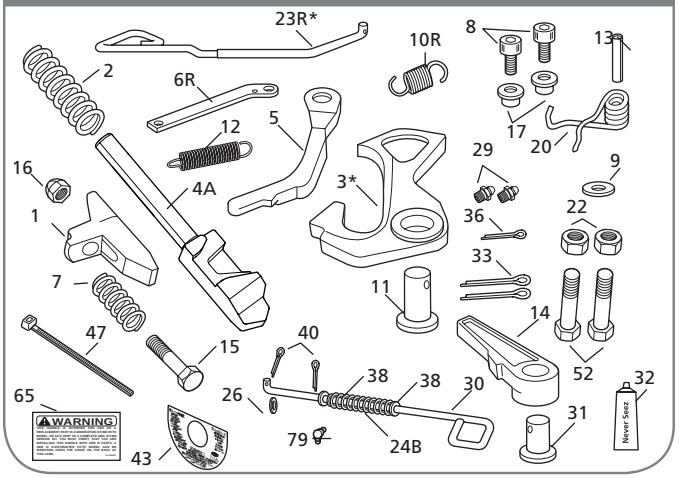

RK-201-A3-02-W
Complete Rebuild, Secondary Lock, Right-Hand, Mfg. Prior 9/1/99

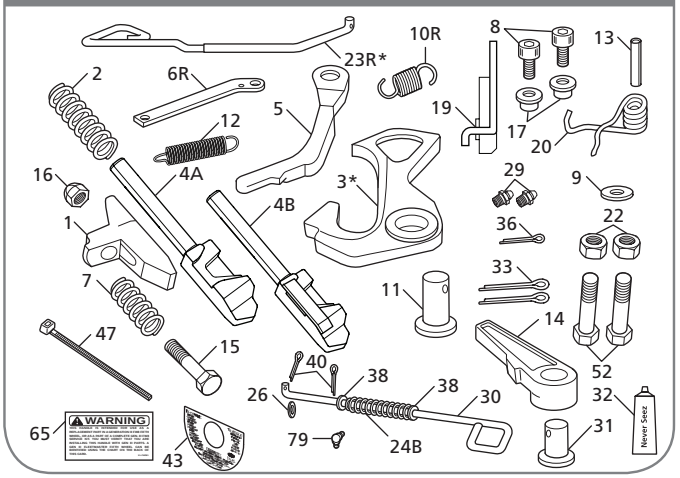

FW8 KIT PARTS LIST

ITEM	DESCRIPTION	PART NUMBER	QTY.	WEIGHT LBS [KG]
1	Wedge, Adjusting	XD-06328	1	1.65 [0.75]
2	Spring, Plunger	XB-06330	1	0.81 [0.37]
3*	Lock, Hinged	XA-09416	1	5.67 [2.57]
4A	Plunger, Locking, Models Manufactured after 9/1/99	XE-10474	1	6.02 [2.73]
4B	Plunger, Locking, Models Manufactured prior to 9/1/99	XA-10474	1	5.24 [2.38]
5	Arm, Cam	XE-09415	1	1.98 [0.90]
6R	Release Arm, Right-Hand	XA-09580	1	2.65 [1.20]
7	Spring, Manual Release	XB-09495	1	0.15 [0.07]
8	SHCS, .50"-13 x .75" Long	XB-08558	2	0.09 [0.04]
9	Washer, .66" I.D. x 1.31" O.D.	XB-T-199	1	0.03 [0.01]
10R	Spring, Extension, Handle, Inner, Right Hand	XB-09629	1	0.08 [0.04]
11	Pin, Lock	XA-06344	1	1.44 [0.65]
12	Spring, Extension, Handle, Outer, Right Hand	XB-09581	1	0.28 [0.13]
13	Pin, Spring, .50" Dia. x 2.75" Long	XB-21-S-500-2750	1	0.02 [0.01]
14	Lock, Manual Secondary	XA-06349	1	2.57 [1.17]
15	HHCS, .63" -11 x 4.25" Gr 8	XB-06329-1	1	0.45 [0.20]
16	Lock Nut, .63" -11	XB-06179-2	1	0.09 [0.04]
17	Roller, .51" I.D. x 1" O.D. x .69" Long	XA-08162	2	0.10 [0.05]

FW8 KIT PARTS LIST

ITEM	DESCRIPTION	PART NUMBER	QTY.	WEIGHT LBS [KG]
19	Wedge Block Stop	XA-09590	1	2.75 [1.25]
20	Spring, Lock Return	XB-08764	1	0.12 [0.06]
22	Lock Nut, .50" -20 Gr C	XB-T-69-A	2	0.04 [0.02]
23R*	Release Handle, Right-Hand, See RK-09556	XA-09632	1	2.32 [1.05]
24B	Spring, Manual Release	XB-1028-1	1	0.10 [0.04]
26	Washer, Clipped, .41" I.D. x .81" O.D.	XB-PWC-38-78	1	0.01 [0.005]
29	Fittings, Grease	XB-H-38	2	0.01 [0.005]
30	Release Handle, Manual Secondary Lock	XA-06345	1	0.94 [0.43]
31	Pin, Manual Secondary Lock	XA-1016-C	1	0.92 [0.42]
32	Never-Seez, 7.5g Tube	XB-02967	1	N/A
33	Pin, Cotter, .25" Dia. x 2" Long	XB-5	2	0.05 [0.02]
36	Pin, Cotter, .19" Dia. x 1.25" Long	XB-06336	1	0.01 [0.005]
38	Washer, .50" I.D. x 1.28" O.D.	XB-1204	2	0.03 [0.01]
40	Pin, Cotter, .13" Dia. x 1" Long	XB-06377	2	0.01 [0.005]
43	Tag, Operation (Service Part Only)	XB-06936	1	N/A
47	Nylon Cable Ties	XB-01961	1	0.01 [0.005]
52	HHCS, .50"-20 x 1.25" Gr 5	XB-C-95	2	0.11 [0.05]
65	Tag, Warning	XL-FW361	1	N/A
79	Fittings, Grease 45°	XB-767-C	1	0.01 [0.005]

*Not sold individually - must be purchased in kit.

XL-FW10081PM-en-US Rev D 2016-03-01 Amendments and errors reserved. © SAF-HOLLAND, Inc.

RK-201-A3-14-L
Rebuild with Grease Fittings, Left-Hand Release, Mfg. After 9/1/99

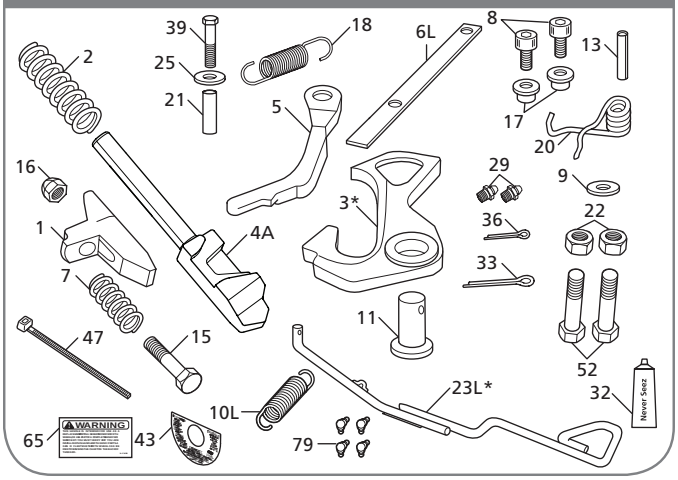

RK-201-A3-14-L-W
Rebuild with Grease Fittings, Left-Hand Release, Mfg. Prior 9/1/99

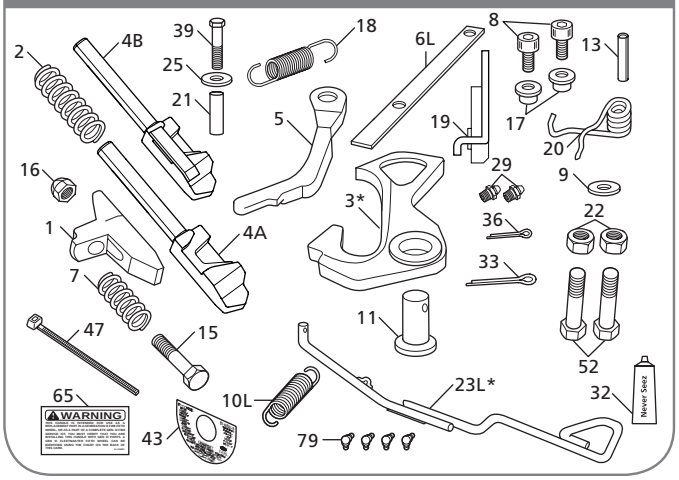

FW8 KIT PARTS LIST

ITEM	DESCRIPTION	PART NUMBER	QTY.	WEIGHT LBS [KG]
1	Wedge, Adjusting	XD-06328	1	1.65 [0.75]
2	Spring, Plunger	XB-06330	1	0.81 [0.37]
3*	Lock, Hinged	XA-09416	1	5.67 [2.57]
4A	Plunger, Locking, Models Manufactured after 9/1/99	XE-10474	1	6.02 [2.73]
4B	Plunger, Locking, Models Manufactured prior to 9/1/99	XA-10474	1	5.24 [2.38]
5	Arm, Cam	XE-09415	1	1.98 [0.90]
6L	Release Arm, Left-Hand	XA-09514	1	2.23 [1.01]
7	Spring, Manual Release	XB-09495	1	0.15 [0.07]
8	SHCS, .50"-13 x .75" Long	XB-08558	2	0.09 [0.04]
9	Washer, .66" I.D. x 1.31" O.D."	XB-T-199	1	0.03 [0.01]
10L	Spring, Extension, Left-Hand & Air	XB-09408	1	0.11 [0.05]
11	Pin, Lock	XA-06344	1	1.44 [0.65]
13	Pin, Spring, .50" Dia. x 2.75" Long	XB-21-S-500-2750	1	0.02 [0.01]
15	HHCS, .63"-11 x 4.25" Gr 8	XB-06329-1	1	0.45 [0.20]
16	Lock Nut, .63"-11	XB-06179-2	1	0.09 [0.04]
17	Roller, .51" I.D. x 1" O.D. x .69" Long	XA-08162	2	0.10 [0.05]
18	Spring, Extension, Left-Hand	XB-09517-1	1	0.17 [0.08]

FW8 KIT PARTS LIST

ITEM	DESCRIPTION	PART NUMBER	QTY.	WEIGHT LBS [KG]
19	Wedge Block Stop	XA-09590	1	2.75 [1.25]
20	Spring, Lock Return	XB-08764	1	0.12 [0.06]
21	Spacer	XA-09558	1	0.06 [0.03]
22	Lock Nut, .50"-20 Gr C	XB-T-69-A	2	0.04 [0.02]
23L*	Release Handle, Left-Hand, See RK-09557	XA-09484	1	2.82 [1.28]
25	Washer, .44" I.D. x 1.03" O.D."	XB-1108	1	0.02 [0.01]
29	Fittings, Grease	XB-H-38	2	0.01 [0.005]
32	Never-Seez, 7.5g Tube	XB-02967	1	N/A
33	Pin, Cotter, .25" Dia. x 2" Long	XB-5	1	0.05 [0.02]
36	Pin, Cotter, .19" Dia. x 1.25" Long	XB-06336	1	0.01 [0.005]
39	HHCS, .38"-16 x 2.25" Gr 5	XB-C-38-C-214	1	0.09 [0.04]
43	Tag, Operation (Service Part Only)	XB-06936	1	N/A
47	Nylon Cable Ties	XB-01961	1	0.01 [0.005]
52	HHCS, .50"-20 x 1.25" Gr 5	XB-C-95	2	0.11 [0.05]
65	Tag, Warning	XL-FW361	1	N/A
79	Fittings, Grease 45°	XB-H-38-C	4	0.02 [0.01]

*Not sold individually - must be purchased in kit.

 Amendments and errors reserved. © SAF-HOLLAND, Inc.

RK-201-A3-14
Rebuild with Grease Fittings, Right-Hand Release, Mfg. After 9/1/99

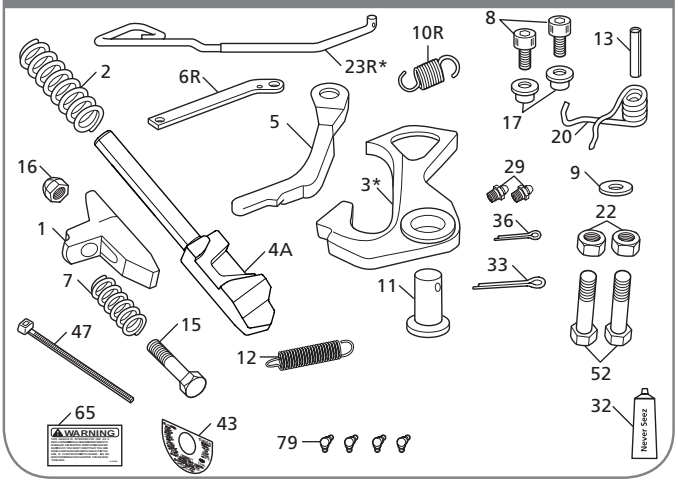

FW8 KIT PARTS LIST				
ITEM	DESCRIPTION	PART NUMBER	QTY.	WEIGHT LBS [KG]
1	Wedge, Adjusting	XD-06328	1	1.65 [0.75]
2	Spring, Plunger	XB-06330	1	0.81 [0.37]
3*	Lock, Hinged	XA-09416	1	5.67 [2.57]
4A	Plunger, Locking, Models Manufactured after 9/1/99	XE-10474	1	6.02 [2.73]
4B	Plunger, Locking, Models Manufactured prior to 9/1/99	XA-10474	1	5.24 [2.38]
5	Arm, Cam	XE-09415	1	1.98 [0.90]
6R	Release Arm, Right-Hand	XA-09580	1	2.65 [1.20]
7	Spring, Manual Release	XB-09495	1	0.15 [0.07]
8	SHCS, .50"-13 x .75" Long	XB-08558	2	0.09 [0.04]
9	Washer, .66" I.D. x 1.31" O.D.	XB-T-199	1	0.03 [0.01]
10R	Spring, Extension, Handle, Inner, Right Hand	XB-09629	1	0.08 [0.04]
11	Pin, Lock	XA-06344	1	1.44 [0.65]
12	Spring, Extension, Handle, Outer, Right Hand	XB-09581	1	0.28 [0.13]
13	Pin, Spring, .50" Dia. x 2.75" Long	XB-21-S-500-2750	1	0.02 [0.01]
15	HHCS, .63"-11 x 4.25" Gr 8	XB-06329-1	1	0.45 [0.20]

RK-201-A3-14-W
Rebuild with Grease Fittings, Right-Hand Release, Mfg. Prior 9/1/99

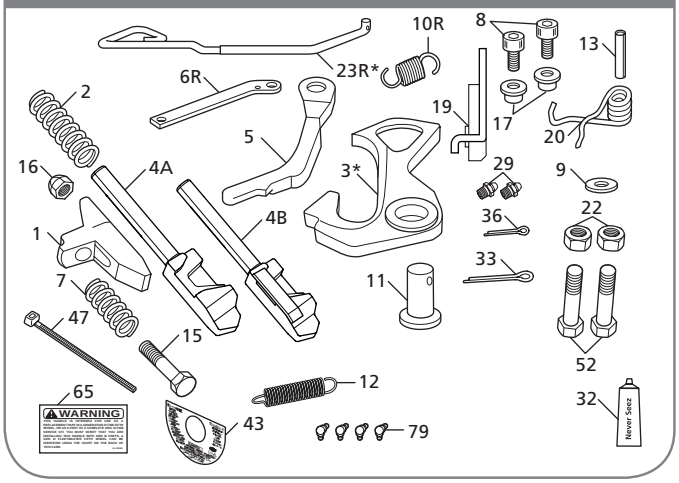

FW8 KIT PARTS LIST				
ITEM	DESCRIPTION	PART NUMBER	QTY.	WEIGHT LBS [KG]
16	Lock Nut, .63"-11	XB-06179-2	1	0.09 [0.04]
17	Roller, .51" I.D. x 1" O.D. x .69" Long	XA-08162	2	0.10 [0.05]
19	Wedge Block Stop	XA-09590	1	2.75 [1.25]
20	Spring, Lock Return	XB-08764	1	0.12 [0.06]
22	Lock Nut, .50"-20 Gr C	XB-T-69-A	2	0.04 [0.02]
23R*	Release Handle, Right-Hand , See RK-09556	XA-09632	1	2.32 [1.05]
29	Fittings, Grease	XB-H-38	2	0.01 [0.005]
32	Never-Seez, 7.5g Tube	XB-02967	1	N/A
33	Pin, Cotter, .25" Dia. x 2" Long	XB-5	1	0.05 [0.02]
36	Pin, Cotter, .19" Dia. x 1.25" Long	XB-06336	1	0.01 [0.005]
43	Tag, Operation (Service Part Only)	XB-06936	1	N/A
47	Nylon Cable Ties	XB-01961	1	0.01 [0.005]
52	HHCS, .50"-20 x 1.25" Gr 5	XB-C-95	2	0.11 [0.05]
65	Tag, Warning	XL-FW361	1	N/A
79	Fittings, Grease 45°	XB-H-38-C	4	0.02 [0.01]

*Not sold individually - must be purchased in kit.

XL-FW10081PM-en-US Rev D 2016-03-01 Amendments and errors reserved. © SAF-HOLLAND, Inc.

RK-201-A3-L-UP
Complete Rebuild, Left-Hand Release with Long Handle, Mfg. After 9/1/99

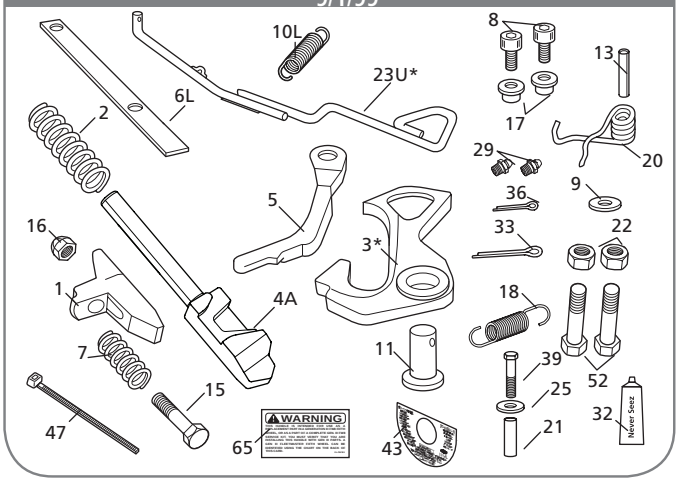

RK-201-A3-L-UP-W
Complete Rebuild, Left-Hand Release with Long Handle, Mfg. Prior 9/1/99

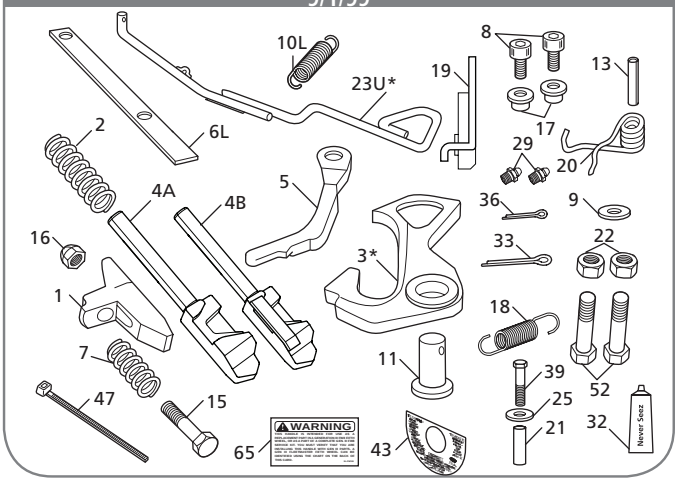

FW8 KIT PARTS LIST

ITEM	DESCRIPTION	PART NUMBER	QTY.	WEIGHT LBS [KG]
1	Wedge, Adjusting	XD-06328	1	1.65 [0.75]
2	Spring, Plunger	XB-06330	1	0.81 [0.37]
3*	Lock, Hinged	XA-09416	1	5.67 [2.57]
4A	Plunger, Locking, Models Manufactured after 9/1/99	XE-10474	1	6.02 [2.73]
4B	Plunger, Locking, Models Manufactured prior to 9/1/99	XA-10474	1	5.24 [2.38]
5	Arm, Cam	XE-09415	1	1.98 [0.90]
6L	Release Arm, Left-Hand	XA-09514	1	2.23 [1.01]
7	Spring, Manual Release	XB-09495	1	0.15 [0.07]
8	SHCS, .50"-13 x .75" Long	XB-08558	2	0.09 [0.04]
9	Washer, .66" I.D. x 1.31" O.D.	XB-T-199	1	0.03 [0.01]
10L	Spring, Extension, Left-Hand & Air	XB-09408	1	0.11 [0.05]
11	Pin, Lock	XA-06344	1	1.44 [0.65]
13	Pin, Spring, .50" Dia. x 2.75" Long	XB-21-S-500-2750	1	0.02 [0.01]
15	HHCS, .63"-11 x 4.25" Gr 8	XB-06329-1	1	0.45 [0.20]
16	Lock Nut, .63"-11	XB-06179-2	1	0.09 [0.04]
17	Roller, .51" I.D. x 1" O.D. x .69" Long	XA-08162	2	0.10 [0.05]

FW8 KIT PARTS LIST

ITEM	DESCRIPTION	PART NUMBER	QTY.	WEIGHT LBS [KG]
18	Spring, Extension, Left-Hand	XB-09517-1	1	0.17 [0.08]
19	Wedge Block Stop	XA-09590	1	2.75 [1.25]
20	Spring, Lock Return	XB-08764	1	0.12 [0.06]
21	Spacer	XA-09558	1	0.06 [0.03]
22	Lock Nut, .50"-20 Gr C	XB-T-69-A	2	0.04 [0.02]
23U*	Release Handle, Left-Hand, Long Handle, See RK-09487	XA-09487	1	3.15 [1.43]
25	Washer, .44" I.D. x 1.03" O.D.	XB-1108	1	0.02 [0.01]
29	Fittings, Grease	XB-H-38	2	0.01 [0.005]
32	Never-Seez, 7.5g Tube	XB-02967	1	N/A
33	Pin, Cotter, .2" Dia. x 2" Long	XB-5	1	0.05 [0.02]
36	Pin, Cotter, .19" Dia. x 1.25" Long	XB-06336	1	0.01 [0.005]
39	HHCS, .38"-16 x 2.25" Gr 5	XB-C-38-C-214	1	0.09 [0.04]
43	Tag, Operation (Service Part Only)	XB-06936	1	N/A
47	Nylon Cable Ties	XB-01961	1	0.01 [0.005]
52	HHCS, .50"-20 x 1.25" Gr 5	XB-C-95	2	0.11 [0.05]
65	Tag, Warning	XL-FW361	1	N/A

*Not sold individually - must be purchased in kit.

 Amendments and errors reserved. © SAF-HOLLAND, Inc.

ILS Style Fifth Wheel Assembly Part Numbers

General Holland prefix indicating complete fifth wheel assembly

SERIES	
8	FW8 Series

MOUNTING STYLE	
NO.	DESCRIPTION
Standard Duty Sliders	
A	Outboard (1 pc tie-bar)
B	Inboard (Serrated 3 pc tie-bar)
C	Inboard (Straight 3 pc tie-bar) (DTNA Air Fitting)
F	Outboard (1 pc tie-bar)
H	Inboard (1 pc tie-bar for PACCAR)
J	Outboard (1 pc tie-bar for PACCAR)
Standard Duty Stationaries	
Z	Integrated Plate Mount
Y	Foot Mount
X	Bracket Castings Only (No Angle or Base Plate)
W	Brackets w/4" Vert. Leg Angle
Specialty Mounting Systems	
K	Kompensator
N	No-Tilt

HEIGHT (approx.)	
NO.	DESCRIPTION
6	6" (Stationary only)
7	7"
8	8"
9	9"
0	10"
1	11" (Komp only)
2	12.0" [305] (Komp only)
3	13" (Komp only)

FW 8 X X XX X X XX

TRAVEL	
NO.	DESCRIPTION
00	Stationary
ILS Travel	
12	12"
18	18" (Only H & J) Mounting Style
24	24"
36	36"
48	48"
No-Tilt ILS Travel	
06	6"
18	18"
30	30"
42	42"
Kompensator Travel	
11	11"
17	17"
24	24"
41	41"
54	54"
66	66"

ANGLES	
NO.	DESCRIPTION
No Angle Mounting Systems	
W	Aftermarket Inboard No-Tilt & Komp (Serrated Edge)
X	Outboard Slider ***or*** Inboard Slider w/o Angles ***or*** Stationary w/o Angles
Y	Outboard No-Tilt & Komp
Z	OEM Inboard No-Tilt & Komp (straight edge)
Frame Width for Standard Duty Mounting Angles	
A	33.25"
B	33.38"
C	33.50"
D	33.62"
E	33.75
F	33.88"
G	34.00"
H	34.12"
J	34.25"
K	34.38"
L	34.50"

RELEASE HANDLE	
NO.	DESCRIPTION
L	Left-hand (Road-side)
R	Right-hand (Curb-side)

OPTION CODE*	
NO.	DESCRIPTION
00	No option
02	Manual Secondary Lock
24	Drilled & Tapped for Auto Lube
28	Dolly Release Handle
80	Air Release Top Plate
EL	Electronic Lock Indicator (ELI)
EA	ELI w/ Air Release Top Plate
8E	ELI w/Air Release Top Plate (PACCAR only)

NOTE: There are no "dashes" used for the complete fifthwheel assembly new part number

* Please note that not all options are are available on every top plate. Multiple option combinations are available.

XL-FW10081PM-en-US Rev D 2016-03-01 Amendments and errors reserved. © SAF-HOLLAND, Inc.

Traditional Style Stationary Fifth Wheel Assembly Part Numbers

General Holland prefix indicating complete fifth wheel assembly

SERIES	
8	FW8 Series

FRAME WIDTH			
LETTER	WIDTH	LETTER	WIDTH
X	No Angle	F	33.88"
A	33.25"	G	34.00"
B	33.38"	H	34.12"
C	33.50"	J	34.25"
D	33.62"	K	34.38"
E	33.75"	L	34.50"

RELEASE HANDLE	
NO.	DESCRIPTION
L	Left-hand (Road-side)
R	Right-hand (Curb-side)

FW 8 XXXX X X X XX

MOUNTING STYLE			
NO.	HEIGHT	NO.	HEIGHT
Foot Mount		*Bracket with Angle*	
7801	8.7"	7811	8.7"
7802	7.7"	7812	7.7"
7803	6.7"	7813	6.7"
7804	5.7"	7814	5.7"
Integrated Plate		*Bracket for Angle*	
7883	8.6"	7821	8.3"
8774	7.6"	7822	7.3"
7885	6.6"	7823	6.3"
7886	5.6"	7824	5.3"

SLIDE TRAVEL	
NO.	DESCRIPTION
1	12.2"
2	18.4"
3	24.5"
4	36.7"
5	48.9"

OPTION CODE*	
NO.	DESCRIPTION
BLANK	No option
02	Manual Secondary Lock
24	Drilled & Tapped for Auto Lube
Other Options Available	

Traditional Style Sliding Fifth Wheel Assembly Part Numbers

General Holland prefix indicating complete fifth wheel assembly

SERIES	
8	FW8 Series

FRAME WIDTH			
LETTER	WIDTH	LETTER	WIDTH
X	No Angle	G	34.00"
A	33.25"	H	34.12"
B	33.38"	J	34.25"
C	33.50"	K	34.38"
D	33.62"	L	34.50"
E	33.75"	*Outboard*	
F	33.88"	T	Angles not Included

RELEASE HANDLE	
NO.	DESCRIPTION
L	Left-hand (Road-side)
R	Right-hand (Curb-side)

FW 8 XXXX X X X XX

MOUNTING STYLE			
NO.	HEIGHT	NO.	HEIGHT
Over the Frame		*Outboard*	
7001	8.63"	8001	8.63"
7002	7.63"	8002	7.63"
7003	6.63"	8003	6.63"

SLIDE TRAVEL	
NO.	DESCRIPTION
1	12.2"
2	18.4"
3	24.5"
4	36.7"
5	48.9"

OPTION CODE*	
NO.	DESCRIPTION
BLANK	No option
02	Manual Secondary Lock
24	Drilled & Tapped for Auto Lube
Other Options Available	

 Amendments and errors reserved. © SAF-HOLLAND, Inc.

SAF-HOLLAND Group

FW8 Stationary Foot Mount

Discontinued - Replacement Parts Only



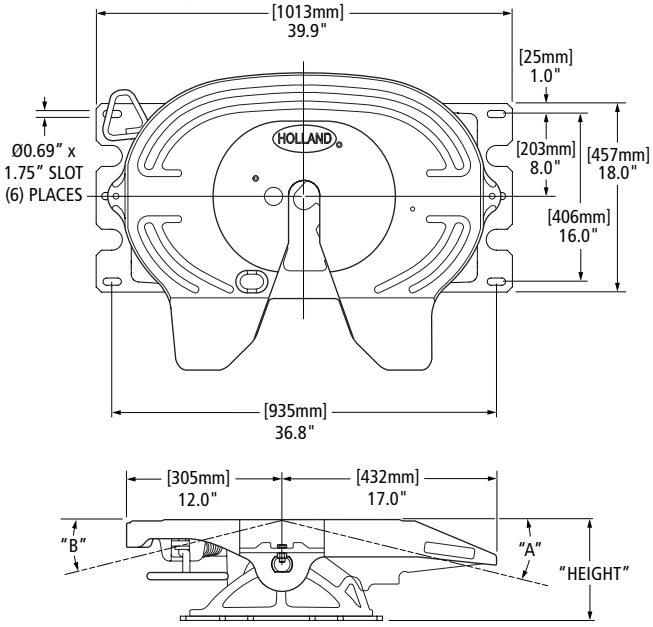

STANDARD OPTION CODES Replaces the Underscore (__) on the new and legacy part number.			
CODE	DESCRIPTION	CODE	DESCRIPTION
00 / Blank	Standard, No Other Options.	24	Drilled and Tapped for Auto Lube
01	Mounting Plate*	80	Air Release, OEM Replacement, Left-Hand Only
02	Manual Secondary Lock	86	Air Release, Aftermarket Installations, Left-Hand Only
04	Mounting Plate and Manual Seconday Release Lock	92	Non-Drop Handle

FW PART NUMBER (CAST BRACKET)*◊	LEGACY FW PART NUMBER (FABRICATED BRACKET)*◊	HEIGHT	A	B	REPLACEMENT BRACKETS**	FW WEIGHT LBS [KG]
FW80Y600XL__	FW8-7804XL__	5.6"	8°	8°	RK-Y600	296.00 [134.26]
FW80Y700XL__	FW8-7803XL__	6.6"	11°	11°	RK-Y700	303.00 [137.44]
FW80Y800XL__	FW8-7802XL__	7.6"	14°	14°	RK-Y800	307.00 [139.25]
FW80Y900XL__	FW8-7801XL__	8.6"	17°	17°	RK-Y900	311.00 [141.07]

◊ For right-hand release fifth wheels, change "L" to "R" in part number.
*No Longer Available.
** See bracket section for more information.

NOTE: A flat or corrugated mounting plate is required for foot mount brackets.

FW8 Stationary Integrated Plate Mount

Discontinued - Replacement Parts Only



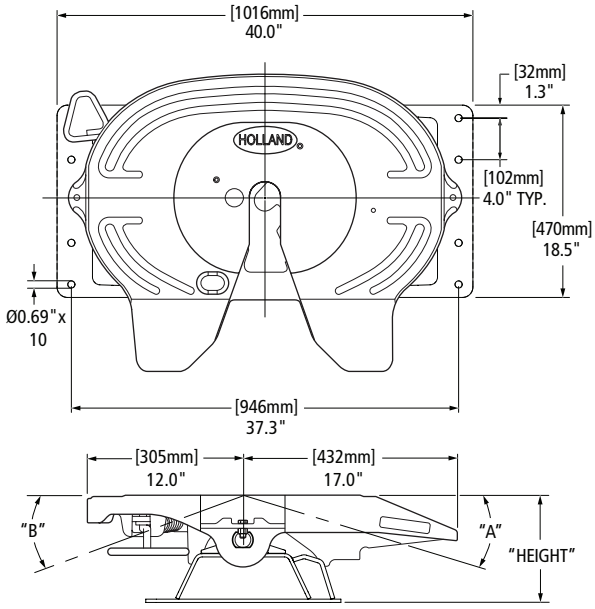

STANDARD OPTION CODES Replaces the Underscore (__) on the new and legacy part number.			
CODE	DESCRIPTION	CODE	DESCRIPTION
00 / Blank	Standard, No Other Options.	48	Manual Secondary Release Lock, Drilled and Tapped for Auto Lube
02	Manual Secondary Lock	80	Air Release, OEM Replacement, Left-Hand Only
14	Grease Fitting in Top Plate, Four (4) Fittings	86	Air Release, Aftermarket Installations, Left-Hand Only
24	Drilled and Tapped for Auto Lube		

FW PART NUMBER (CAST BRACKET)*◊	LEGACY FW PART NUMBER (FABRICATED BRACKET)*◊	HEIGHT	A	B	REPLACEMENT BRACKETS**	FW WEIGHT LBS [KG]
FW80Z600XL__	FW8-7886XL__	5.6"	8°	8°	RK-Z600	324.00 [146.96]
FW80Z700XL__	FW8-7885XL__	6.6"	11°	11°	RK-Z700	330.00 [149.69]
FW80Z800XL__	FW8-7884XL__	7.6"	14°	14°	RK-Z800	335.00 [151.95]
FW80Z900XL__	FW8-7883XL__	8.6"	17°	17°	RK-Z900	339.00 [153.77]

◊ For right-hand release fifth wheels, change "L" to "R" in part number.
* No Longer Available
** See bracket section for more information.

XL-FW10081PM-en-US Rev D 2016-03-01 Amendments and errors reserved. © SAF-HOLLAND, Inc.

FW8 Sliding ILS Outboard Mount

Discontinued - Replacement Parts Only



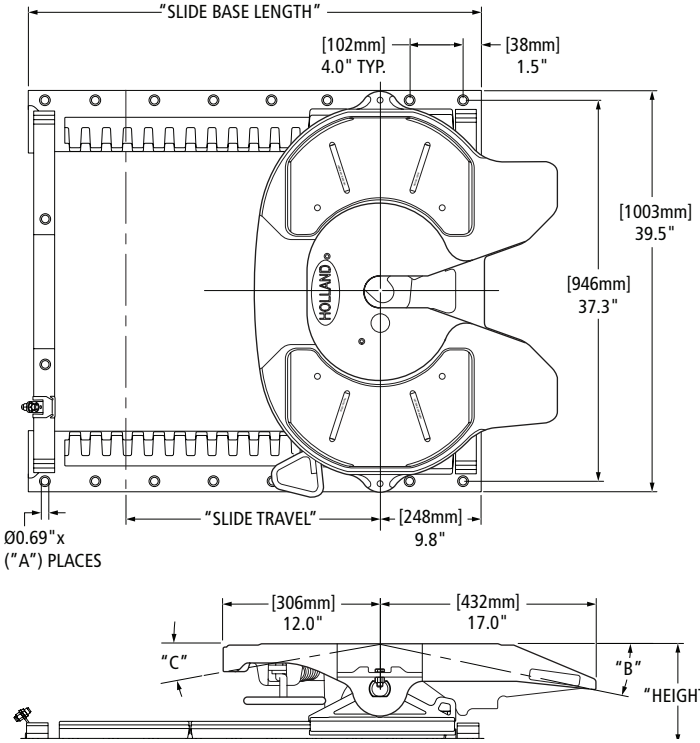

STANDARD OPTION CODES Replaces the Underscore (__) on the new and legacy part number.	
NUMBER CODE	DESCRIPTION
00 / Blank	Standard, No Other Options
02	Manual Secondary Lock
14	Grease Fittings in Top Plate, Four (4) Fittings
24	Drilled and Tapped for Auto Lube
47	Tilt Stops

STANDARD OPTION CODES Replaces the Underscore (__) on the new and legacy part number.	
NUMBER CODE	DESCRIPTION
80	Air Release, OEM Replacement Left-Hand Only
86	Air Release, Aftermarket Installations, Air Control Modules Included Left-Hand Only
0G	Plunger Dip Control

ILS FW PART NUMBER◊	LEGACY		HEIGHT	SLIDE TRAVEL	SLIDE BASE LENGTH	A # OF HOLES	B	C	REPLACEMENT SLIDE BASE AND BRACKET**	REPLACEMENT SLIDE BASE**	REPLACEMENT BRACKET**	FW WEIGHT LBS [KG]
	TRADITIONAL PART NUMBER (AIR RELEASE)*◊	TRADITIONAL PART NUMBER (MANUAL RELEASE)*◊										
FW80A712XL__	FW8-8003T1L__	FW8-8013T1L__	6.7"	12" [305]	31" [787]	16	8°	8°	XA-A712	XA-A12	RK-10689-1	409.00 [185.52]
FW80A724XL__	FW8-8003T3L__	FW8-8013T3L__		24" [610]	43" [1092]	22			XA-A724	XA-A24		443.00 [200.94]
FW80A736XL__	FW8-8003T4L__	FW8-8013T4L__		36" [914]	55" [1397]	28			XA-A736	XA-A36		477.00 [216.36]
FW80A748XL__	—	—		48" [1219]	67" [1702]	34			XA-A748	XA-A48		510.00 [231.33]
FW80A812XL__	FW8-8002T1L__	FW8-8012T1L__	7.7" [196]	12" [305]	31" [787]	16	12°	10°	XA-A812	XA-A12	RK-10689-2	414.00 [187.79]
FW80A824XL__	FW8-8002T3L__	FW8-8012T3L__		24" [610]	43" [1092]	22			XA-A824	XA-A24		448.00 [203.21]
FW80A836XL__	FW8-8002T4L__	FW8-8012T4L__		36" [914]	55" [1397]	28			XA-A836	XA-A36		481.00 [218.18]
FW80A848XL__	FW8-8002T5L__	FW8-8012T5L__		48" [1219]	67" [1702]	34			XA-A848	XA-A48		515.00 [233.60]
FW80A912XL__	FW8-8001T1L__	FW8-8011T1L__	8.7" [221]	12" [305]	31" [787]	16	15°	12°	XA-A912	XA-A12	RK-10689-3	418.00 [189.60]
FW80A924XL__	FW8-8001T3L__	FW8-8011T3L__		24" [610]	43" [1092]	22			XA-A924	XA-A24		451.00 [204.57]
FW80A936XL__	FW8-8001T4L__	FW8-8011T4L__		36" [914]	55" [1397]	28			XA-A936	XA-A36		485.00 [219.99]
FW80A948XL__	FW8-8001T5L__	FW8-8011T5L__		48" [1219]	67" [1702]	34			XA-A948	XA-A48		519.00 [235.41]

◊ For right-hand release fifth wheels, change "L" to "R" in part number.
* No longer available
** See bracket section for more information.

 Amendments and errors reserved. © SAF-HOLLAND, Inc.

FW8 Stationary Brackets for Angle Mounting

Also Available With Angle Later In This Section.
Discontinued - Replacement Parts Only



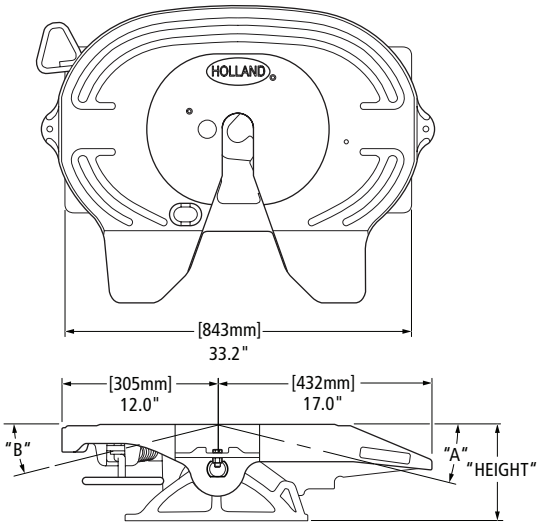

STANDARD OPTION CODES Replaces the Underscore (__) on the new and legacy part number.	
NUMBER CODE	DESCRIPTION
00 / Blank	Standard, No Other Options.
02	Manual Secondary Lock
14	Grease Fittings in Top Plate, Four (4) Fittings
24	Drilled and Tapped for Auto Lube
80	Air Release, OEM Replacement, Left-Hand Only
86	Air Release, New Installations, Left-Hand Only

FW PART NUMBER (CAST BRACKET)*◊	LEGACY FW PART NUMBER (FABRICATED BRACKET)*◊	HEIGHT	A	B	REPLACEMENT BRACKETS**	FW WEIGHT LBS [KG]
FW80X600XL__	FW8-7824XL__	5.3"	8°	8°	RK-X600	249.00 [112.94]
FW80X700XL__	FW8-7823XL__	6.3"	11°	11°	RK-X700	261.00 [118.39]
FW80X800XL__	FW8-7822XL__	7.3"	14°	14°	RK-X800	265.00 [120.20]
FW80X900XL__	FW8-7821XL__	8.3"	17°	17°	RK-X900	263.00 [119.29]

◊ For right-hand release fifth wheels, change "L" to "R" in part number.
*No Longer Available.
** See bracket section for more information.

FW8 Stationary No Tilt Outboard and Inboard for Angle Mount

Also Available With Angle Later In This Section.
Discontinued - Replacement Parts Only


Outboard


Inboard

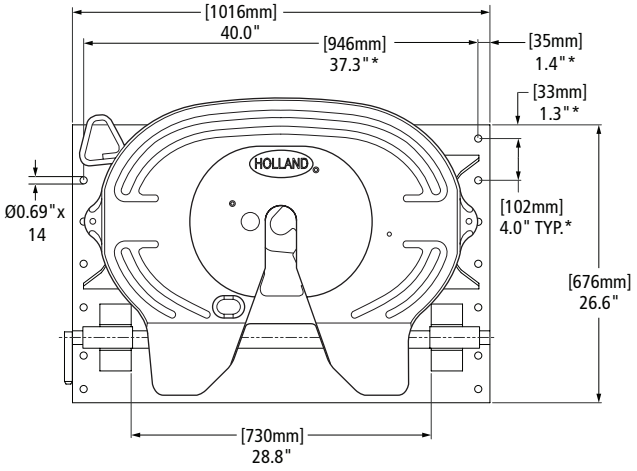

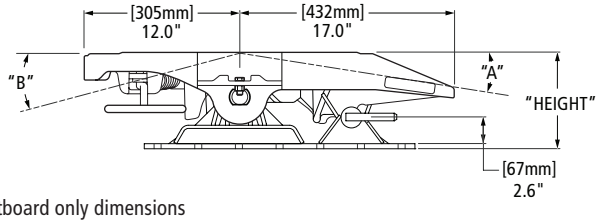

* Outboard only dimensions

OUTBOARD FW PART NUMBER◊	HEIGHT	A	B	REPLACEMENT BRACKETS**	FW WEIGHT LBS [KG]
FW8-8984XL06	7.8" [198]	9°	9°	XA-8984	434.00 [196.86]
FW8-8983XL06	8.8" [224]	14°	15°	XA-8983	436.00 [197.77]

** See bracket section for more information.
◊ For right-hand release fifth wheels, change "L" to "R" in part number.

INBOARD FW PART NUMBER◊*	HEIGHT	A	B	REPLACEMENT BRACKETS**	FW WEIGHT LBS [KG]
FW8-8922XL06	7.7" [196]	9°	15°	XA-8922	434.00 [196.86]

** See bracket section for more information.
◊ For right-hand release fifth wheels, change "L" to "R" in part number.
*No Longer Available.

NOTE: See Accessories Section for No-Tilt Kits. Not included in Replacement Bracket part number.

XL-FW10081PM-en-US Rev D 2016-03-01 Amendments and errors reserved. © SAF-HOLLAND, Inc.

FW8 Sliding ILS Inboard Mount for Angle

Also Available With Angle Later In This Section.
Discontinued - Replacement Parts Only



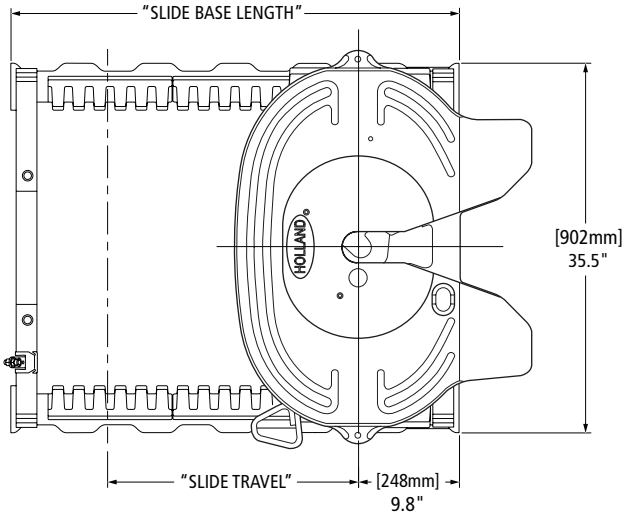

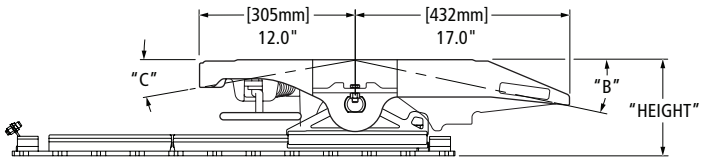

STANDARD OPTION CODES Replaces the Underscore (__) on the new and legacy part number.	
NUMBER CODE	DESCRIPTION
00 / Blank	Standard, No Other Options
02	Manual Secondary Lock
11	Weight Saver Cutout
21	.38" x 5" x 5" Angle
24	Drilled and Tapped for Auto Lube
30	Manual Secondary Lock and Weight Saver Cutout
51	.38" x 4" x 6" Angle
55	Weight Saver Cutout and Drilled and Tapped for Auto Lube

STANDARD OPTION CODES Replaces the Underscore (__) on the new and legacy part number.	
NUMBER CODE	DESCRIPTION
66	.31" x 4" x 4" Angle and Weight Saver Cutout
67	.38" x 4" x 6" Angle and Weight Saver Cutout
80	Air Release, OEM Replacement, Left-Hand Only
86	Air Release, Aftermarket Installations, Air Control Modules Included, Left-Hand Only
90	Weight Saver Cutout and Air Release, OEM Replacement, Left-Hand Only
95	Weight Saver Cutout and Air Release, Aftermarket Installations, Air Control Modules Included, Left-Hand Only

ILS FW PART NUMBER*◊	LEGACY		HEIGHT	SLIDE TRAVEL	SLIDE BASE LENGTH	B	C	REPLACEMENT SLIDE BASE AND BRACKET**	REPLACEMENT SLIDE BASE**	REPLACEMENT BRACKETS**	FW WEIGHT LBS [KG]
	TRADITIONAL PART NUMBER (AIR RELEASE)*◊	TRADITIONAL PART NUMBER (MANUAL RELEASE)*◊									
FW80B712XL__	FW8-7003X1L__	FW8-7013X1L__	6.6"	12" [305]	31" [787]	8°	8°	XA-B712X	XA-B12X	RK-10689-1	393.00 [178.26]
FW80B724XL__	FW8-7003X2L__	FW8-7013X2L__		24" [610]	43" [1092]			XA-B724X	XA-B24X		421.00 [190.96]
FW80B736XL__	FW8-7003X4L__	FW8-7013X4L__		36" [914]	55" [1397]			XA-B736X	XA-B36X		449.00 [203.66]
FW80B748XL__	FW8-7003X5L__	FW8-7013X5L__		48" [1219]	67" [1702]			XA-B748X	XA-B48X		477.00 [216.36]
FW80B812XL__	FW8-7002X1L__	FW8-7012X1L__	7.6"	12" [305]	31" [787]	12°	10°	XA-B812X	XA-B12X	RK-10689-2	398.00 [180.53]
FW80B824XL__	FW8-7002X2L__	FW8-7012X2L__		24" [610]	43" [1092]			XA-B824X	XA-B24X		425.00 [192.78]
FW80B836XL__	FW8-7002X4L__	FW8-7012X4L__		36" [914]	55" [1397]			XA-B836X	XA-B36X		454.00 [205.93]
FW80B848XL__	FW8-7002X5L__	FW8-7012X5L__		48" [1219]	67" [1702]			XA-B848X	XA-B48X		481.00 [218.18]
FW80B912XL__	FW8-7001X1L__	FW8-7011X1L__	8.6"	12" [305]	31" [787]	15°	12°	XA-B912X	XA-B12X	RK-10689-3	402.00 [182.34]
FW80B924XL__	FW8-7001X2L__	FW8-7011X2L__		24" [610]	43" [1092]			XA-B924X	XA-B24X		429.00 [194.59]
FW80B936XL__	FW8-7001X4L__	FW8-7011X4L__		36" [914]	55" [1397]			XA-B936X	XA-B36X		458.00 [207.75]
FW80B948XL__	FW8-7001X5L__	FW8-7011X5L__		48" [1219]	67" [1702]			XA-B948X	XA-B48X		485.00 [219.99]

◊ For right-hand release fifth wheels, change "L" to "R" in part number.
* No longer available
** See bracket section for more information.

 Amendments and errors reserved. © SAF-HOLLAND, Inc.

FW8 Sliding Traditional Outboard Mount

Discontinued - Replacement Parts Only

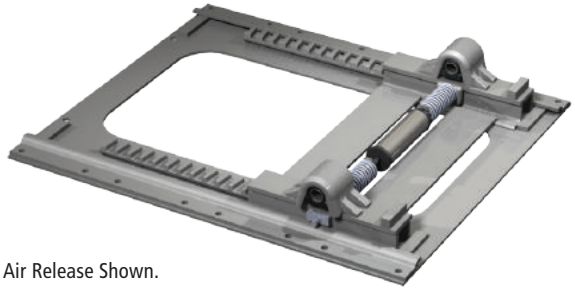

Air Release Shown.

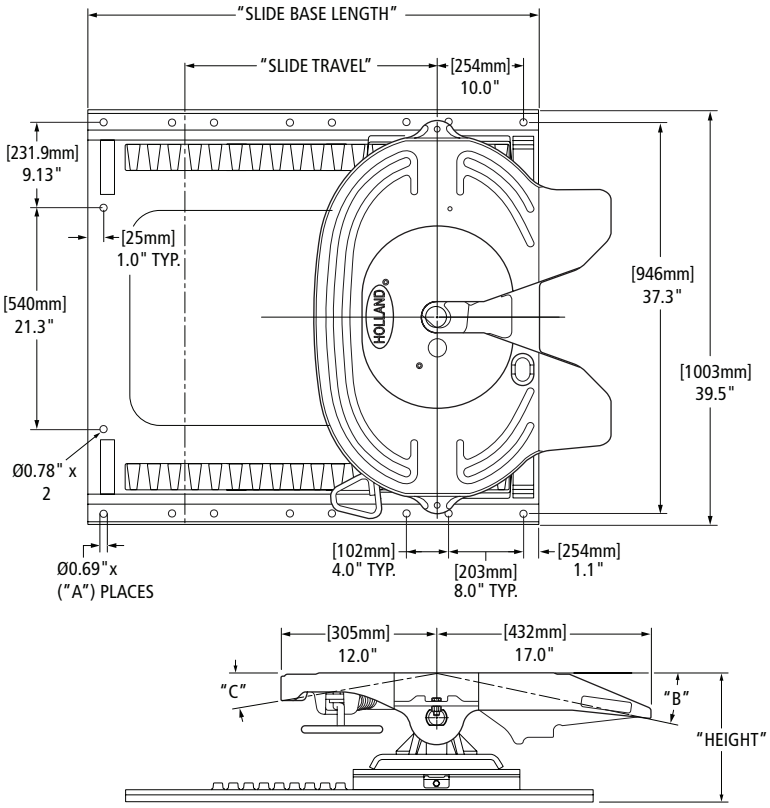

STANDARD OPTION CODES Replaces the Underscore (__) on the new and legacy part number.	
NUMBER CODE	DESCRIPTION
00 / Blank	Standard, No Other Options
02	Manual Secondary Lock
14	Grease Fittings in Top Plate, Four (4) Fittings
24	Drilled and Tapped for Auto Lube
47	Tilt Stops

STANDARD OPTION CODES Replaces the Underscore (__) on the new and legacy part number.	
NUMBER CODE	DESCRIPTION
80	Air Release, OEM Replacement Left-Hand Only
86	Air Release, Aftermarket Installations, Air Control Modules Included Left-Hand Only
0G	Plunger Dip Control

LEGACY FW PART NUMBER*◊	REPLACED BY ILS FW PART NUMBER◊*	SLIDE BRACKET TYPE	HEIGHT	SLIDE TRAVEL	SLIDE BASE LENGTH	A # OF HOLES	B	C	REPLACEMENT SLIDE BASE AND BRACKET**	REPLACEMENT SLIDE BASE**	REPLACEMENT BRACKETS**	FW WEIGHT LBS [KG]
FW8-8003T1L__	FW80A712XL__	Air Release	6.6"	10.7" [272	42.2" [1072]	16	10°	10°	—	XA-07871-1L	XA-7003	481.00 [218.18]
FW8-8003T2L__	FW80A724XL__			16.8" [427]	50.2" [1275]	18			—	XA-07871-2L		503.00 [228.16]
FW8-8003T3L__	FW80A724XL__			24.5" [622]	55.2" [1402]	20			—	XA-07871-3L		529.00 [239.95]
FW8-8003T4L__	FW80A736XL__			41.3" [1049]	74.2" [1885]	26			—	XA-07871-4L		582.00 [263.99]
FW8-8002T1L__	FW80A812XL__		7.6"	12.2" [310]	34.2" [869]	12	12°†	10°	—	XA-07871-1	XA-7002	434.00 [196.86]
FW8-8002T2L__	FW80A824XL__			18.4" [467]	42.2" [1072]	16			—	XA-07871-2		448.00 [203.21]
FW8-8002T3L__	FW80A824XL__			24.5" [622]	46.2" [1173]	16			—	XA-07871-3		479.00 [217.27]
FW8-8002T4L__	FW80A836XL__			36.7" [932]	58.2" [1478]	20			—	XA-07871-4		512.00 [232.24]
FW8-8002T5L__	FW80A848XL__			48.9" [1242]	70.2" [1783]	24			—	XA-07871-5		552.00 [250.38]

◊ For right-hand release fifth wheels, change "L" to "R" in part number.
† If Option Code 47 Dimension Changes to 8°
* No longer available.
** See bracket section for more information.

XL-FW10081PM-en-US Rev D 2016-03-01 Amendments and errors reserved. © SAF-HOLLAND, Inc.

LEGACY FW PART NUMBER *◊	REPLACED BY ILS FW PART NUMBER*◊	SLIDE BRACKET TYPE	HEIGHT	SLIDE TRAVEL	SLIDE BASE LENGTH	A # OF HOLES	B	C	REPLACEMENT SLIDE BASE AND BRACKET**	REPLACEMENT SLIDE BASE**	REPLACEMENT BRACKETS**	FW WEIGHT LBS [KG]
FW8-8001T1L__	FW80A912XL__	Air Release	8.6"	12.2" [310]	34.2" [869]	12	18°	15°	—	XA-07871-1	XA-7001	439.00 [199.13]
FW8-8001T2L__	FW80A924XL__			18.4" [467]	42.2" [1072]	16			—	XA-07871-2		453.00 [205.48]
FW8-8001T3L__	FW80A924XL__			24.5" [622]	46.2" [1173]	16			—	XA-07871-3		484.00 [219.54]
FW8-8001T4L__	FW80A936XL__			36.7" [932]	58.2" [1478]	20			—	XA-07871-4		517.00 [234.51]
FW8-8001T5L__	FW80A948XL__			48.9" [1242]	70.2" [1783]	24			—	XA-07871-5		557.00 [252.65]
FW8-8301T1L__	—		8.1"	10.7" [272	42.2" [1072]	16	15°	15°	XA-8311-T1	XA-07871-1L	XA-7301-1	492.00 [223.17]
FW8-8301T2L__	—			16.8" [427]	50.2" [1275]	18			XA-8311-T2	XA-07871-2L		514.00 [233.15]
FW8-8301T3L__	—			24.5" [622]	55.2" [1402]	20			XA-8311-T3	XA-07871-3L		540.00 [244.94]
FW8-8301T4L__	—			41.3" [1049]	74.2" [1885]	26			XA-8311-T4	XA-07871-4L		593.00 [268.98]
FW8-8009T2L__	—		10.1"	13.8" [351]	42.2" [1072]	16	15°	15°	XA-8301-T1	XA-07871-2	XA-7009	485.00 [219.99]
FW8-8009T3L__	—			19.9" [505]	46.2" [1173]	16			XA-8301-T2	XA-07871-3		516.00 [234.05]
FW8-8009T4L__	—			32.1" [815]	58.2" [1478]	20			XA-8301-T3	XA-07871-4		549.00 [249.02]
FW8-8009T5L__	—			44.4" [1128]	70.2" [1783]	24			XA-8301-T4	XA-07871-5		589.00 [267.17]
FW8-8013T1L__	FW80A712XL__	Manual Release	6.6"	10.7" [272	42.2" [1072]	16	10°	10°	—	XA-07871-1L	XA-7013	473.00 [214.55]
FW8-8013T2L__	FW80A724XL__			16.8" [427]	50.2" [1275]	18			—	XA-07871-2L		495.00 [224.53]
FW8-8013T3L__	FW80A724XL__			24.5" [622]	55.2" [1402]	20			—	XA-07871-3L		521.00 [236.32]
FW8-8013T4L__	FW80A736XL__			41.3" [1049]	74.2" [1885]	26			—	XA-07871-4L		574.00 [260.36]
FW8-8012T1L__	FW80A812XL__		7.6"	12.2" [310]	34.2" [869]	12	12°	10°	—	XA-07871-1	XA-7012	438.00 [198.67]
FW8-8012T2L__	FW80A824XL__			18.4" [467]	42.2" [1072]	16			—	XA-07871-2		452.00 [205.02]
FW8-8012T3L__	FW80A824XL__			24.5" [622]	46.2" [1173]	16			—	XA-07871-3		483.00 [219.09]
FW8-8012T4L__	FW80A836XL__			36.7" [932]	58.2" [1478]	20			—	XA-07871-4		516.00 [234.05]
FW8-8012T5L__	FW80A848XL__			48.8"	70.2" [1783]	24			—	XA-07871-5		553.00 [250.84]
FW8-8011T1L__	FW80A912XL__		8.6"	12.2" [310]	34.2" [869]	12	18°	15°	—	XA-07871-1	XA-7011	443.00 [200.94]
FW8-8011T2L__	FW80A924XL__			18.4" [467]	42.2" [1072]	16			—	XA-07871-2		457.00 [207.29]
FW8-8011T3L__	FW80A924XL__			24.5" [622]	46.2" [1173]	16			—	XA-07871-3		488.00 [221.35]
FW8-8011T4L__	FW80A936XL__			36.7" [932]	58.2" [1478]	20			—	XA-07871-4		521.00 [236.32]
FW8-8011T5L__	FW80A948XL__			48.9" [1242]	70.2" [1783]	24			—	XA-07871-5		561.00 [254.47]
FW8-8311T1L__	—		8.1"	10.7" [272	42.2" [1072]	16	15°	15°	XA-8311-T1	XA-07871-1L	XA-7311	496.00 [224.98]
FW8-8311T2L__	—			16.8" [427]	50.2" [1275]	18			XA-8311-T2	XA-07871-2L		518.00 [234.96]
FW8-8311T3L__	—			24.5" [622]	55.2" [1402]	20			XA-8311-T3	XA-07871-3L		544.00 [246.75]
FW8-8311T4L__	—			41.3" [1049]	74.2" [1885]	26			XA-8311-T4	XA-07871-4L		597.00 [270.79]
FW8-8019T2L__	—		10.1"	13.8" [351]	42.2" [1072]	16	15°	15°	XA-8019-T2	XA-07871-2	XA-7019	477.00 [216.36]
FW8-8019T3L__	—			19.9" [505]	46.2" [1173]	16			XA-8019-T3	XA-07871-3		508.00 [230.42]
FW8-8019T4L__	—			32.1" [815]	58.2" [1478]	20			XA-8019-T4	XA-07871-4		541.00 [245.39]
FW8-8019T5L__	—			44.4" [1128]	70.2" [1783]	24			XA-8019-T5	XA-07871-5		581.00 [263.54]

◊ For right-hand release fifth wheels, change "L" to "R" in part number.
† If Option Code 47 Dimension Changes to 8°
* No longer available if replacement exists.
** See bracket section for more information.

 Amendments and errors reserved. © SAF-HOLLAND, Inc.

FW8 Sliding Traditional Inboard for Angle Mount

Also Available With Angle Later In This Section.
Discontinued - Replacement Parts Only

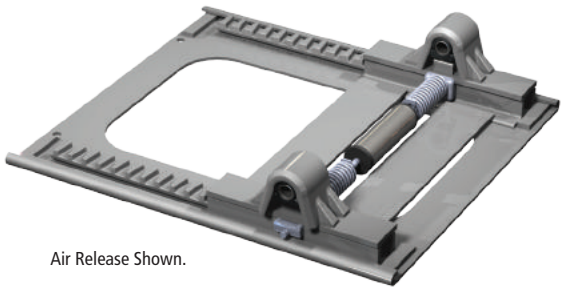

Air Release Shown.

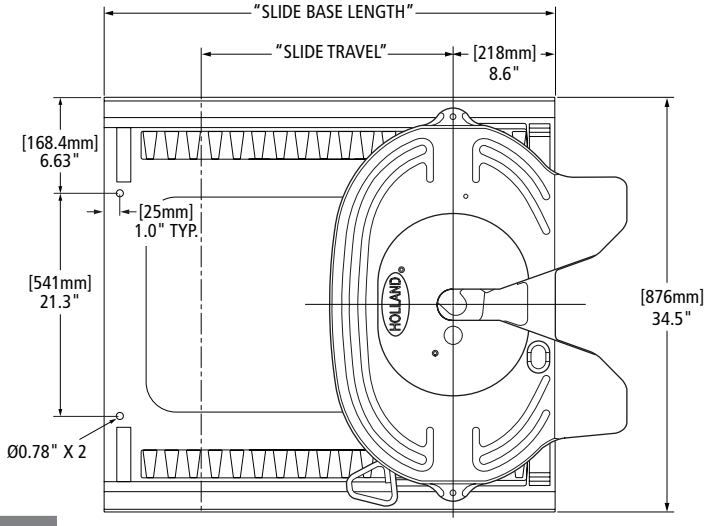

STANDARD OPTION CODES Replaces the Underscore (__) on the new and legacy part number.	
NUMBER CODE	**DESCRIPTION**
00 / Blank	Standard, No Other Options
02	Manual Secondary Lock
11	Weight Saver Cutout
21	.38" x 5" x 5" Angle
24	Drilled and Tapped for Auto Lube
30	Manual Secondary Lock and Weight Saver Cutout
51	.38" x 4" x 6" Angle
55	Weight Saver Cutout and Drilled and Tapped for Auto Lube
66	.31" x 4" x 4" Angle and Weight Saver Cutout
67	.38" x 4" x 6" Angle and Weight Saver Cutout
80	Air Release, OEM Replacement, Left-Hand Only
86	Air Release, Aftermarket Installations, Air Control Modules Included, Left-Hand Only

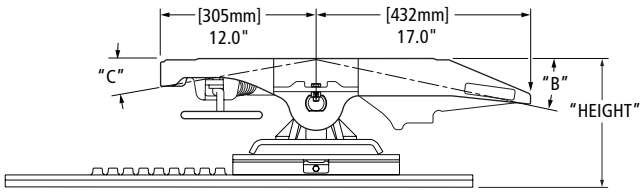

STANDARD OPTION CODES Replaces the Underscore (__) on the new and legacy part number.	
NUMBER CODE	**DESCRIPTION**
90	Weight Saver Cutout and Air Release, OEM Replacement, Left-Hand Only
95	Weight Saver Cutout and Air Release, Aftermarket Installations, Air Control Modules Included, Left-Hand Only

LEGACY FW PART NUMBER*◊	REPLACED BY ILS FW PART NUMBER*◊	SLIDE BRACKET TYPE	HEIGHT	SLIDE TRAVEL	SLIDE BASE LENGTH	B	C	REPLACEMENT SLIDE BASE AND BRACKET**	REPLACEMENT SLIDE BASE**	REPLACEMENT BRACKETS**	FW WEIGHT LBS [KG]
FW8-7003X1L__	FW80B712XL__	Air Release	6.6"	10.7" [272	38.9" [988]	10°	10°	—	XA-0751-1	XA-7003-1	447.00 [202.76]
FW8-7003X2L__	FW80B724XL__			16.8" [427]	45.0" [1143]			—	XA-0751-2		461.00 [209.11]
FW8-7003X3L__	FW80B724XL__			24.5" [622]	52.6" [1336]			—	XA-0751-3A		481.00 [218.18]
FW8-7003X4L__	FW80B736XL__			41.3" [1049]	69.5" [1765]			—	XA-0751-4		512.00 [232.24]
FW8-7003X5L__	FW80B748XL__			53.6" [1361]	82.0" [2083]			—	XA-0751-5		572.00 [259.45]
FW8-7003X6L__	—			65.8" [1671]	94.0" [2388]			XA-7003-X6	XA-0751-6		628.00 [284.86]
FW8-7002X1L__	FW80B812XL__		7.6"	12.2" [310]	32.8" [833]	13°	10°	—	XA-0750-1	XA-7002	470.00 [213.19]
FW8-7002X2L__	FW80B824XL__			18.4" [467]	38.9" [988]			—	XA-0750-2		500.00 [226.80]
FW8-7002X3L__	FW80B824XL__			24.5" [622]	45.0" [1143]			—	XA-0750-3		522.00 [236.78]
FW8-7002X4L__	FW80B836XL__			36.7" [932]	57.2" [1453]			—	XA-0750-4		574.00 [260.36]
FW8-7002X5L__	FW80B848XL__			48.9" [1242]	69.5" [1765]			—	XA-0750-5		629.00 [285.31]
FW8-7002X6L__	—			61.2" [1554]	82.0" [2083]			XA-7002-X6	XA-0750-6		679.00 [307.99]
FW8-7002X7L__	—			73.4"	94.0" [2388]			XA-7002-X7	XA-0750-7		744.00 [337.47]

◊ For right-hand release fifth wheels, change "L" to "R" in part number.
* No longer available.
** See bracket section for more information.

XL-FW10081PM-en-US Rev D 2016-03-01 Amendments and errors reserved. © SAF-HOLLAND, Inc.

LEGACY FW PART NUMBER*◊	REPLACED BY ILS FW PART NUMBER*◊	SLIDE BRACKET TYPE	HEIGHT	SLIDE TRAVEL	SLIDE BASE LENGTH	B	C	REPLACEMENT SLIDE BASE AND BRACKET**	REPLACEMENT SLIDE BASE**	REPLACEMENT BRACKETS**	FW WEIGHT LBS [KG]
FW8-7001X1L__	FW80B912XL__	Air Release	8.6"	12.2" [310]	32.8" [833]	15°	15°	—	XA-0750-1	XA-7001	475.00 [215.46]
FW8-7001X2L__	FW80B924XL__			18.4" [467]	38.9" [988]			—	XA-0750-2		505.00 [229.06]
FW8-7001X3L__	FW80B924XL__			24.5" [622]	45.0" [1143]			—	XA-0750-3		527.00 [239.04]
FW8-7001X4L__	FW80B936XL__			36.7" [932]	57.2" [1453]			—	XA-0750-4		579.00 [262.63]
FW8-7001X5L__	FW80B948XL__			48.9" [1242]	69.5" [1765]			—	XA-0750-5		634.00 [287.58]
FW8-7001X6L__	—			61.2" [1554]	82.0" [2083]			XA-7001-X6	XA-0750-6		684.00 [310.26]
FW8-7301X1L__	—		8.1"	10.7" [272	38.9" [988]	15°	15°	XA-7301-X1	XA-0751-1	XA-7301-1	453.00 [205.48]
FW8-7301X2L__	—			16.8" [427]	45.0" [1143]			XA-7301-X2	XA-0751-2		467.00 [211.83]
FW8-7301X3L__	—			24.5" [622]	52.6" [1336]			XA-7301-X3	XA-0751-3A		487.00 [220.90]
FW8-7301X4L__	—			41.3" [1049]	69.5" [1765]			XA-7301-X4	XA-0751-4		518.00 [234.96]
FW8-7301X5L__	—			53.6" [1361]	82.0" [2083]			XA-7301-X5	XA-0751-5		578.00 [262.18]
FW8-7301X6L__	—			65.8" [1671]	94.0" [2388]			XA-7301-X6	XA-0751-6		634.00 [287.58]
FW8-7009X2L__	—		10.2"	13.8" [351]	38.9" [988]	21°	22°	XA-7009-X2	XA-0750-2	XA-7009	510.00 [231.33]
FW8-7009X3L__	—			19.9" [505]	45.0" [1143]			XA-7009-X3	XA-0750-3		535.00 [242.67]
FW8-7009X4L__	—			32.1" [815]	57.2" [1453]			XA-7009-X4	XA-0750-4		587.00 [266.26]
FW8-7009X5L__	—			44.4" [1128]	69.5" [1765]			XA-7009-X5	XA-0750-5		641.00 [290.75]
FW8-7009X6L__	—			56.6" [1438]	82.0" [2083]			XA-7009-X6	XA-0750-6		727.00 [329.76]
FW8-7013X1L__	FW80B712XL__	Manual Release	6.6"	10.7" [272	38.9" [988]	10°	10°	—	XA-0751-1	XA-7013	
FW8-7013X2L__	FW80B724XL__			16.8" [427]	45.0" [1143]			—	XA-0751-2		458.00 [207.75]
FW8-7013X3L__	FW80B724XL__			24.5" [622]	52.6" [1336]			—	XA-0751-3A		478.00 [216.82]
FW8-7013X4L__	FW80B736XL__			41.3" [1049]	69.5" [1765]			—	XA-0751-4		509.00 [230.88]
FW8-7013X5L__	FW80B748XL__			53.6" [1361]	82.0" [2083]			—	XA-0751-5		569.00 [258.09]
FW8-7013X6L__	—			65.8" [1671]	94.0" [2388]			XA-7013-X6	XA-0751-6		625.00 [283.50]
FW8-7012X1L__	FW80B812XL__		7.6"	12.2" [310]	32.8" [833]	13°	10°	—	XA-0750-1	XA-7012	461.00 [209.11]
FW8-7012X2L__	FW80B824XL__			18.4" [467]	38.9" [988]			—	XA-0750-2		491.00 [222.71]
FW8-7012X3L__	FW80B824XL__			24.5" [622]	45.0" [1143]			—	XA-0750-3		513.00 [232.69]
FW8-7012X4L__	FW80B836XL__			36.7" [932]	57.2" [1453]			—	XA-0750-4		565.00 [256.28]
FW8-7012X5L__	FW80B848XL__			48.9" [1242]	69.5" [1765]			—	XA-0750-5		620.00 [281.23]
FW8-7012X6L__	—			61.2" [1554]	82.0" [2083]			XA-7012-X6	XA-0750-6		670.00 [303.91]
FW8-7011X1L__	FW80B912XL__		8.6"	12.2" [310]	32.8" [833]	15°	15°	—	XA-0750-1	XA-7011	467.00 [211.83]
FW8-7011X2L__	FW80B924XL__			18.4" [467]	38.9" [988]			—	XA-0750-2		497.00 [225.44]
FW8-7011X3L__	FW80B924XL__			24.5" [622]	45.0" [1143]			—	XA-0750-3		519.00 [235.41]
FW8-7011X4L__	FW80B936XL__			36.7" [932]	57.2" [1453]			—	XA-0750-4		571.00 [259.00]
FW8-7011X5L__	FW80B948XL__			48.9" [1242]	69.5" [1765]			—	XA-0750-5		626.00 [283.95]
FW8-7011X6L__	—			61.2" [1554]	82.0" [2083]			XA-7011-X6	XA-0750-6		676.00 [306.63]
FW8-7311X1L__	—		8.1"	10.7" [272	38.9" [988]	15°	15°	XA-7311-X1	XA-0751-1	XA-7311	453.00 [205.48]
FW8-7311X2L__	—			16.8" [427]	45.0" [1143]			XA-7311-X2	XA-0751-2		467.00 [211.83]
FW8-7311X3L__	—			24.5" [622]	52.6" [1336]			XA-7311-X3	XA-0751-3A		487.00 [220.90]
FW8-7311X4L__	—			41.3" [1049]	69.5" [1765]			XA-7311-X4	XA-0751-4		518.00 [234.96]
FW8-7311X5L__	—			53.6" [1361]	82.0" [2083]			XA-7311-X5	XA-0751-5		578.00 [262.18]
FW8-7311X6L__	—			65.8" [1671]	94.0" [2388]			XA-7311-X6	XA-0751-6		634.00 [287.58]
FW8-7019X2L__	—		10.2"	13.8" [351]	38.9" [988]	21°	21°	—	XA-0750-2	XA-7019	529.00 [239.95]
FW8-7019X3L__	—			19.9" [505]	45.0" [1143]			—	XA-0750-3		554.00 [251.29]
FW8-7019X4L__	—			32.1" [815]	57.2" [1453]			—	XA-0750-4		607.00 [275.33]
FW8-7019X5L__	—			44.4" [1128]	69.5" [1765]			—	XA-0750-5		660.00 [299.37]
FW8-7019X6L__	—			56.6" [1438]	82.0" [2083]			—	XA-0750-6		718.00 [325.68]

◊ For right-hand release fifth wheels, change "L" to "R" in part number.
* No longer available.
** See bracket section for more information.

 Amendments and errors reserved. © SAF-HOLLAND, Inc.

FW8 Sliding Traditional
No Tilt Outboard Mount

Discontinued - Replacement Parts Only

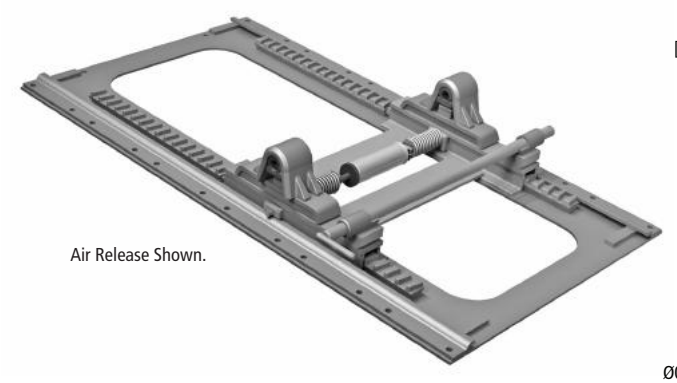

Air Release Shown.

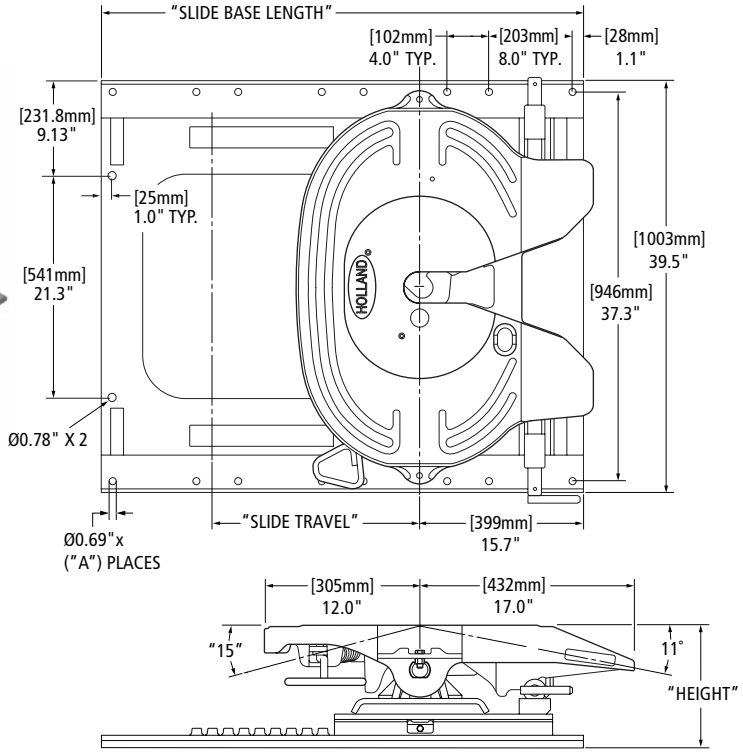

PART NUMBER*◊	SLIDE BRACKET TYPE	HEIGHT	SLIDE TRAVEL	SLIDE BASE LENGTH	A # OF HOLES	REPLACEMENT SLIDE BASE AND BRACKET**	REPLACEMENT SLIDE BASE**	REPLACEMENT BRACKET **	FW WEIGHT LBS [KG]
FW8-8401T2L06	Air Release	8.6"	13.8" [351]	42.2" [1072]	16	XA-8401-T2	XA-07871-2	XA-7401	498.00 [225.89]
FW8-8401T3L06			19.9" [505]	46.2" [1173]	16	XA-8401-T3	XA-07871-3		532.00 [241.31]
FW8-8401T4L06			32.1" [815]	58.2" [1478]	20	XA-8401-T4	XA-07871-4		556.00 [252.20]
FW8-8401T5L06			44.4" [1128]	70.2" [1783]	24	XA-8401-T5	XA-07871-5		613.00 [278.05]
FW8-8409T2L06		10.1"	13.8" [351]	42.2" [1072]	16	XA-8409-T2	XA-07871-2	XA-7409	528.00 [239.50]
FW8-8409T3L06			19.9" [505]	46.2" [1173]	16	XA-8409-T3	XA-07871-3		562.00 [254.92]
FW8-8409T4L06			32.1" [815]	58.2" [1478]	20	XA-8409-T4	XA-07871-4		586.00 [265.81]
FW8-8409T5L06			44.4" [1128]	70.2" [1783]	24	XA-8409-T5	XA-07871-5		643.00 [291.66]
FW8-8411T2L06	Manual Release	8.6"	13.8" [351]	42.2" [1072]	16	XA-8411-T2	XA-07871-2	XA-7411	502.00 [227.70]
FW8-8411T3L06			19.9" [505]	46.2" [1173]	16	XA-8411-T3	XA-07871-3		536.00 [243.13]
FW8-8411T4L06			32.1" [815]	58.2" [1478]	20	XA-8411-T4	XA-07871-4		560.00 [254.01]
FW8-8411T5L06			44.4" [1128]	70.2" [1783]	24	XA-8411-T5	XA-07871-5		617.00 [279.87]
FW8-8419T2L06		10.1"	13.8" [351]	42.2" [1072]	16	XA-8419-T2	XA-07871-2	XA-7419	532.00 [241.31]
FW8-8419T3L06			19.9" [505]	46.2" [1173]	16	XA-8419-T3	XA-07871-3		566.00 [256.73]
FW8-8419T4L06			32.1" [815]	58.2" [1478]	20	XA-8419-T4	XA-07871-4		590.00 [267.62]
FW8-8419T5L06			44.4" [1128]	70.2" [1783]	24	XA-8419-T5	XA-07871-5		647.00 [293.47]

◊ For right-hand release fifth wheels, change "L" to "R" in part number.
* No longer available.
** See bracket section for more information.

NOTE: See Accessories Section for No-Tilt Kits. Not included in Replacement Bracket part number.

XL-FW10081PM-en-US Rev D 2016-03-01 Amendments and errors reserved. © SAF-HOLLAND, Inc.

FW8 Sliding Traditional No Tilt Inboard for Angle Mount

Also Available With Angle Later In This Section
Discontinued - Replacement Parts Only

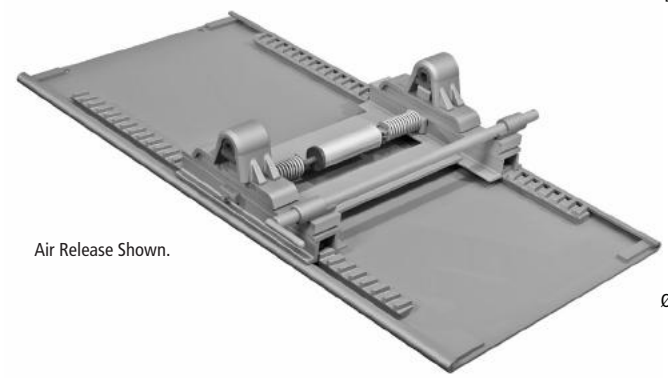

Air Release Shown.

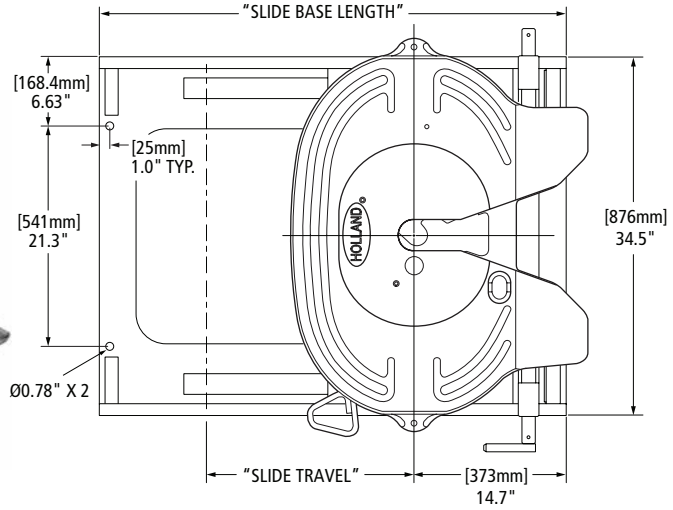

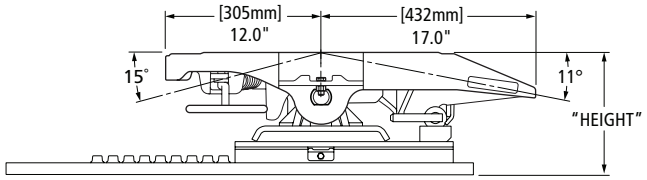

PART NUMBER*◊	SLIDE BRACKET TYPE	HEIGHT	SLIDE TRAVEL	SLIDE BASE LENGTH	REPLACEMENT SLIDE BASE AND BRACKET**	REPLACEMENT SLIDE BASE**	REPLACEMENT BRACKET **	FW WEIGHT LBS [KG]
FW8-7401X2L06	Air Release	8.6"	13.9"	38.9" [988]	XA-7401-X2-11	XA-0751-2	XA-7401	529.00 [239.95]
FW8-7401X3L06			20.0"	45.0" [1143]	XA-7401-X3-11	XA-0751-3		557.00 [252.65]
FW8-7401X4L06			32.2"	57.2" [1453]	XA-7401-X4-11	XA-0751-4		598.00 [271.25]
FW8-7401X5L06			44.4" [1128]	69.5" [1765]	XA-7401-X5-11	XA-0751-5		654.00 [296.65]
FW8-7401X6L06			56.7"	82.0" [2083]	XA-7401-X6-11	XA-0751-6		704.00 [319.33]
FW8-7409X2L06		10.1"	13.9"	38.9" [988]	XA-7409-X2-11	XA-0751-2	XA-7409	556.00 [252.20]
FW8-7409X3L06			20.0"	45.0" [1143]	XA-7409-X3-11	XA-0751-3		584.00 [264.90]
FW8-7409X4L06			32.2"	57.2" [1453]	XA-7409-X4-11	XA-0751-4		625.00 [283.50]
FW8-7409X5L06			44.4" [1128]	69.5" [1765]	XA-7409-X5-11	XA-0751-5		681.00 [308.90]
FW8-7409X6L06			56.7"	82.0" [2083]	XA-7409-X6-11	XA-0751-6		731.00 [331.58]
FW8-7411X2L06	Manual Release	8.6"	13.9"	38.9" [988]	XA-7411-X2-11	XA-0751-2	XA-7411	533.00 [241.76]
FW8-7411X3L06			20.0"	45.0" [1143]	XA-7411-X3-11	XA-0751-3		561.00 [254.47]
FW8-7411X4L06			32.2"	57.2" [1453]	XA-7411-X4-11	XA-0751-4		602.00 [273.06]
FW8-7411X5L06			44.4" [1128]	69.5" [1765]	XA-7411-X5-11	XA-0751-5		658.00 [298.46]
FW8-7411X6L06			56.7"	82.0" [2083]	XA-7411-X6-11	XA-0751-6		708.00 [321.14]
FW8-7419X2L06		10.1"	13.9"	38.9" [988]	XA-7419-X2-11	XA-0751-2	XA-7419	564.00 [255.83]
FW8-7419X3L06			20.0"	45.0" [1143]	XA-7419-X3-11	XA-0751-3		593.00 [268.98]
FW8-7419X4L06			32.2"	57.2" [1453]	XA-7419-X4-11	XA-0751-4		636.00 [288.48]
FW8-7419X5L06			44.4" [1128]	69.5" [1765]	XA-7419-X5-11	XA-0751-5		694.00 [314.79]
FW8-7419X6L06			56.7"	82.0" [2083]	XA-7419-X6-11	XA-0751-6		753.00 [341.56]

◊ For right-hand release fifth wheels, change "L" to "R" in part number.
* No longer available.
** See bracket section for more information.

NOTE: See Accessories Section for No-Tilt Kits. Not included in Replacement Bracket part number.

 Amendments and errors reserved. © SAF-HOLLAND, Inc.

SAF-HOLLAND Group

FW8 Stationary Kompensator Outboard Plate Mount

Discontinued - Replacement Parts Only



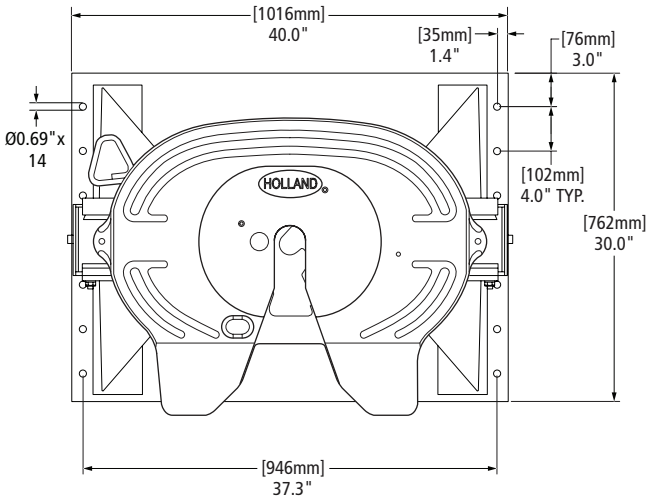

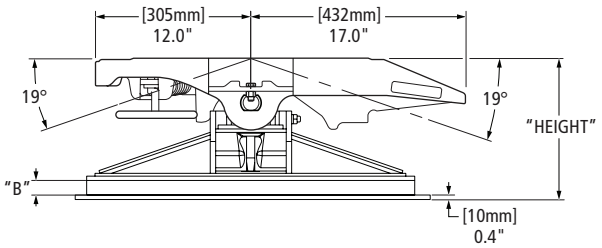

STANDARD OPTION CODES Replaces the Underscore (__) on the part number.	
NUMBER CODE	DESCRIPTION
Blank	Standard, No Other Options
02	Manual Secondary Lock
14	Grease Fittings in Top Plate, Four (4) Fittings
19	Komp Lockouts
24	Drilled and Tapped for Auto Lube

PART NUMBER*◊	HEIGHT	B	REPLACEMENT BRACKET**	FW WEIGHT LBS [KG]
FW8-7726XL__	12.8"	3.00"	XA-40-7726	580.00 [263.08]
FW8-7727XL__	11.8"	2.0"	XA-40-7727	575.00 [260.82]
FW8-7729XL__	9.8"	— +	XA-40-7729	510.00 [231.33]

◊ For right-hand release fifth wheels, change "L" to "R" in part number.
* No longer available.
+ Kompensator frame is mounted directly to plate, and extends 1.19" below bottom of plate.
** See bracket section for more information.

FW8 Stationary Kompensator Inboard Plate Mount for Angle Mounting

Discontinued - Replacement Parts Only



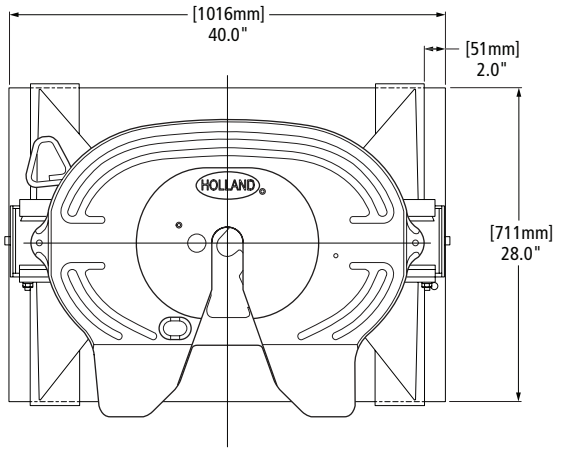

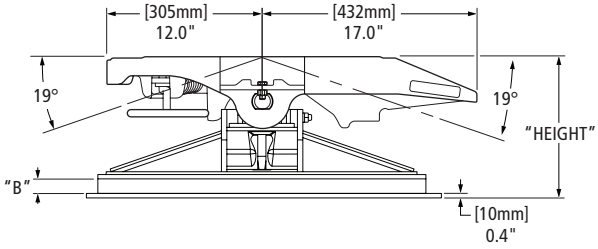

STANDARD OPTION CODES Replaces the Underscore (__) on the part number.	
NUMBER CODE	DESCRIPTION
Blank	Standard, No Other Options
02	Manual Secondary Lock
19	Komp Lockouts

PART NUMBER*◊	HEIGHT	B	REPLACEMENT BRACKET**	FW WEIGHT LBS [KG]
FW8-7721XL__	12.8"	3.0"	XA-40-7721	647.00 [293.47]
FW8-7722XL__	11.8"	2.0"	XA-40-7722	632.00 [286.67]
FW8-7723XL__	9.8"	— +	XA-40-7723	570.00 [258.55]

◊ For right-hand release fifth wheels, change "L" to "R" in part number.
* No longer available.
+ Kompensator frame is mounted directly to plate, and extends 1.19" below bottom of plate.
** See bracket section for more information.

XL-FW10081PM-en-US Rev D 2016-03-01 Amendments and errors reserved. © SAF-HOLLAND, Inc.

FW8 Stationary Kompensator Inboard for Angle Mount

Also Available With Angle Later In This Section
Discontinued - Replacement Parts Only



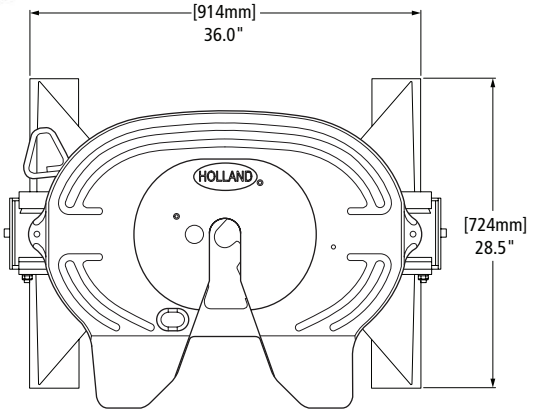

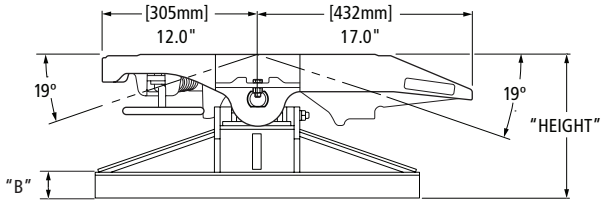

STANDARD OPTION CODES Replaces the Underscore (__) on the part number.	
NUMBER CODE	DESCRIPTION
Blank	Standard, No Other Options
02	Manual Secondary Lock
13	Kompensator Dust Covers
15	Kompensator Dust Covers and Grease Fittings in Top Plate
24	Drilled and Tapped for Auto Lube, Manual Secondary Lock, Kompensator Dust Covers & Grease Fittings in Top
38	Manual Secondary Lock, Kompensator Dust Covers and Grease Fittings in Top Plate

PART NUMBER*◊	HEIGHT	B	REPLACEMENT BRACKET**	FW WEIGHT LBS [KG]
FW8-7701XL__	12.4"	3.0"	XA-40-7701	527.00 [239.04]
FW8-7702XL__	11.4"	2.0"	XA-40-7702	512.00 [232.24]
FW8-7703XL__	9.4"	— +	XA-40-7703	470.00 [213.19]

◊ For right-hand release fifth wheels, change "L" to "R" in part number.
* No longer available.
+ Kompensator frame is mounted directly to plate, and extends 1.17" below bottom of plate.
** See bracket section for more information.

FW8 Sliding Kompensator Inboard for Angle Mount

Discontinued - Replacement Parts Only



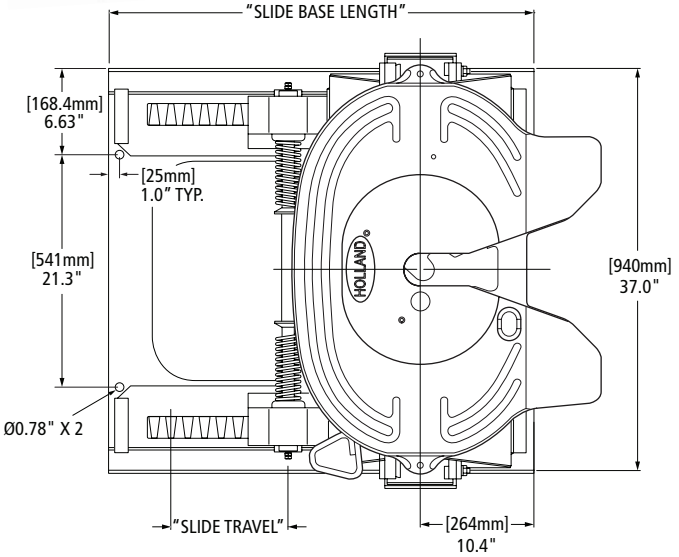

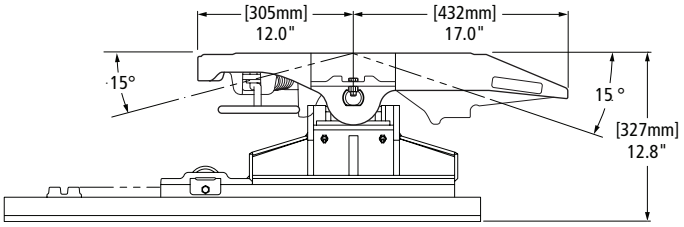

STANDARD OPTION CODES Replaces the Underscore (__) on the part number.	
NUMBER CODE	DESCRIPTION
Blank	Standard, No Other Options
19	Komp Lockouts
24	Drilled and Tapped for Auto Lube
83	Drilled and Tapped for Auto Lube and Komp Lockouts

PART NUMBER*◊	SLIDE TRAVEL	SLIDE BASE LENGTH	REPLACEMENT SLIDE BASE**	REPLACEMENT BRACKET**	FW WEIGHT LBS [KG]
FW8-7201X1L__	10.7" [272]	38.9" [988]	XA-0284-1	XA-7201	816.00 [370.13]
FW8-7201X2L__	16.8" [427]	45.0" [1143]	XA-0284-2		836.00 [379.20]
FW8-7201X3L__	24.5" [622]	52.6" [1336]	XA-0284-3A		892.00 [404.60]
FW8-7201X4L__	41.3" [1049]	69.5" [1765]	XA-0284-4		913.00 [414.13]
FW8-7201X5L__	53.6" [1361]	82.0" [2083]	XA-0284-5		1027.00 [465.84]
FW8-7201X6L__	65.8" [1671]	94.0" [2388]	XA-0284-6		1126.00 [510.75]

◊ For right-hand release fifth wheels, change "L" to "R" in part number.
* No longer available.
** See bracket section for more information.

 Amendments and errors reserved. © SAF-HOLLAND, Inc.

SAF-HOLLAND Group

FW8 Stationary Brackets with Angle Mount

Discontinued - Replacement Parts Only



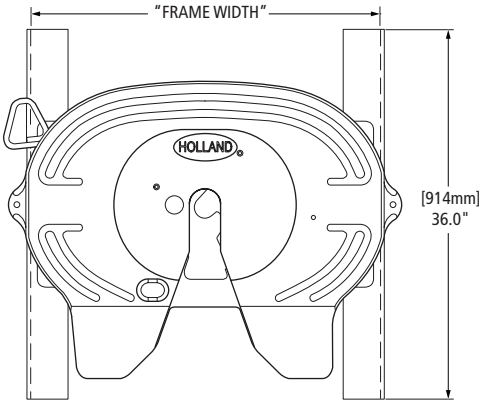

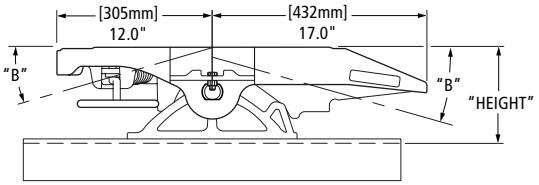

Frame width "A-G": .38" x 4" x 4" angle
"H-N": .38" x 4" x 6" angle
See option chart for other options.

STANDARD OPTION CODES Replaces the Underscore (__) on the new and legacy part number.	
NUMBER CODE	**DESCRIPTION**
00 / Blank	Standard, No Other Options
02	Manual Secondary Lock
21	.38" x 5" x 5" Angle
24	Drilled and Tapped for Auto Lube
28	Dolly Handle
45	Manual Secondary Lock and .38" x 5" x 5" Angle
51	.38" x 4" x 6" Angle
53	.38" x 4" x 4" x 44" Angle Centered
76	.38" x 5" x 5" x 44" Angle Centered
80	Air Release, OEM Replacement, Left-Hand Only
86	Air Release, New installations, Left-Hand Only
98	Manual Secondary Release Lock and .38" x 5" x 5" x 44" Angle Centered

FW PART NUMBER CAST BRACKET*◊	FW PART NUMBER FABRICATED*◊	HEIGHT	B	REPLACEMENT BRACKETS**	FW WEIGHT LBS [KG]
FW80W600GL__	FW8-7814GL__	5.6"	8°	RK-W600-G	325.00 [147.42]
FW80W700GL__	FW8-7813GL__	6.6"	11°	RK-W700-G	332.00 [150.59]
FW80W800GL__	FW8-7812GL__	7.6"	14°	RK-W800-G	336.00 [152.41]
FW80W900GL__	FW8-7811GL__	8.6"	17°	RK-W900-G	338.00 [153.31]
—	FW8-7553GL__	10.4"	15°	XA-7553-G	360.00 [163.29]
—	FW8-7552GL__	11.4"	15°	XA-7552-G	367.00 [166.47]
—	FW8-7551GL__	12.4"	15°	XA-7551-G	365.00 [165.56]

◊ For right-hand release fifth wheels, change "L" to "R" in part number.
* No longer available.
** See bracket section for more information.

FRAME WIDTH CODE CHART					
CODE	**FRAME WIDTH**	**CODE**	**FRAME WIDTH**	**CODE**	**FRAME WIDTH**
A	33.25"	F	33.88"	L	34.50"
B	33.38"	G†	34.00"	M	34.62"
C	33.50"	H	34.12"	N	34.75"
D	33.62"	J	34.25"		
E	33.75"	K	34.38"		

† Standard

XL-FW10081PM-en-US Rev D 2016-03-01 Amendments and errors reserved. © SAF-HOLLAND, Inc.

FW8 Sliding ILS Inboard with Angle Mount

Discontinued - Replacement Parts Only

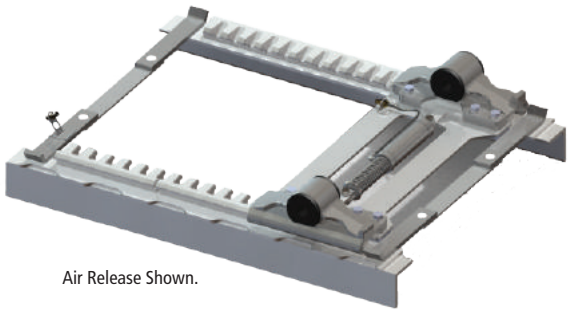

Air Release Shown.

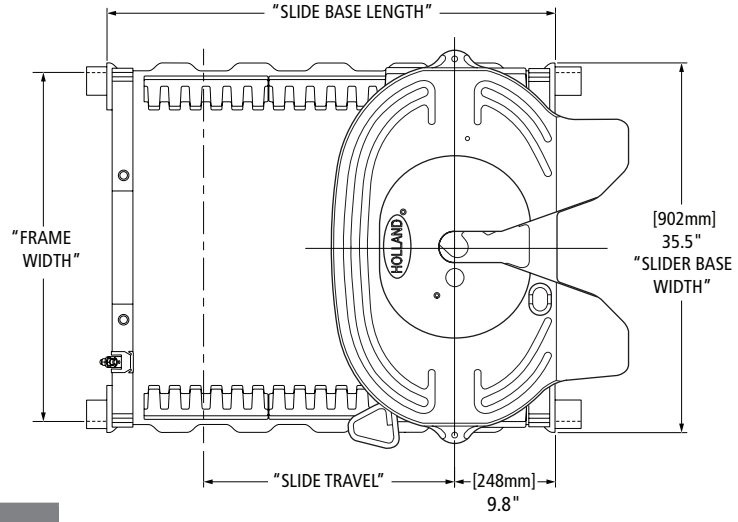

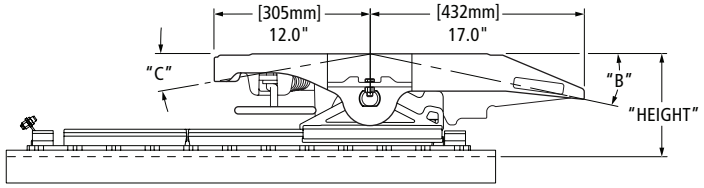

FRAME WIDTH CODE CHART					
CODE	FRAME WIDTH	CODE	FRAME WIDTH	CODE	FRAME WIDTH
A	33.25"	F	33.88"	L	34.50"
B	33.38"	G†	34.00"	M	34.62"
C	33.50"	H	34.12"	N	34.75"
D	33.62"	J	34.25"	P	34.88"
E	33.75"	K	34.38"	Q	35.00"

† Standard

Frame width "A-C": .38" x 3" x 4" angle
"D-K": .38" x 3.5" x 4" angle
"K-Q": .38" x 4" x 4" angle
See option codes for other options.

STANDARD OPTION CODES Replaces the Underscore (__) on the new and legacy part number.	
NUMBER CODE	DESCRIPTION
00 / Blank	Standard, No Other Option
02	Manual Secondary Lock
11	Weight Saver Cutout
14	Grease Fittings in Top Plate, Four (4) Fittings
21	.38" x 5" x 5" Angle
24	Drilled and Tapped for Auto Lube
30	Manual Secondary Lock and Weight Saver Cutout
51	.38" x 4" x 6" Angle
55	Drilled and Tapped for Auto Lube and Weight Saver Cutout

STANDARD OPTION CODES Replaces the Underscore (__) on the new and legacy part number.	
NUMBER CODE	DESCRIPTION
64	Weight Saver Cutout and .38" x 5" x 5" Angle
65	.31" x 4" x 4" Angle
67	Weight Saver Cutout and .38" x 4" x 6" Angle
80	Air Release, OEM Replacement, Left-Hand Only
86	Air Release, Aftermarket Installations, Air Control Modules Included, Left-Hand Only
90	Weight Saver Cutout and Air Release, OEM Replacement, Left-Hand Only
95	Weight Saver Cutout and Air Release, Aftermarket Installations, Air Control Modules Included, Left-Hand Only

FW PART NUMBER◊	TRAD.SLIDER PART NUMBER (AIR RELEASE)*◊	TRAD. SLIDER PART NUMBER (MANUAL RELEASE)*◊	HGT	SLIDE TRAVEL	SLIDE BASE LENGTH	B	C	REPLACEMENT SLIDE BASE AND BRACKET**	REPLACEMENT SLIDE BASE **	REPLACEMENT BRACKET**	FW WEIGHT LBS [KG]
FW80B712GL__	FW8-7003G1L__	FW8-7013G1L__	7.0"	12" [305]	31" [787]	8°	8°	XA-B712G	XA-B12G	RK-10689-1	445.00 [201.85]
FW80B724GL__	FW8-7003G2L__	FW8-7013G2L__		24" [610]	43" [1092]			XA-B724G	XA-B24G	RK-10689-1	491.00 [222.71]
FW80B736GL__	FW8-7003G4L__	FW8-7013G4L__		36" [914]	55" [1397]			XA-B736G	XA-B36G	RK-10689-1	537.00 [243.58]
FW80B748GL__	FW8-7003G5L__	FW8-7013G5L__		48" [1219]	67" [1702]			XA-B748G	XA-B48G	RK-10689-1	583.00 [264.44]
FW80B812GL__	FW8-7002G1L__	FW8-7012G1L__	8.0"	12" [305]	31" [787]	12°	10°	XA-B812G	XA-B12G	RK-10689-2	449.00 [203.66]
FW80B824GL__	FW8-7002G2L__	FW8-7012G2L__		24" [610]	43" [1092]			XA-B824G	XA-B24G	RK-10689-2	495.00 [224.53]
FW80B836GL__	FW8-7002G4L__	FW8-7012G4L__		36" [914]	55" [1397]			XA-B836G	XA-B36G	RK-10689-2	542.00 [245.85]
FW80B848GL__	FW8-7002G5L__	FW8-7012G5L__		48" [1219]	67" [1702]			XA-B848G	XA-B48G	RK-10689-2	588.00 [266.71]
FW80B912GL__	FW8-7001G1L__	FW8-7011G1L__	9.0"	12" [305]	31" [787]	15°	12°	XA-B912G	XA-B12G	RK-10689-3	453.00 [205.48]
FW80B924GL__	FW8-7001G2L__	FW8-7011G2L__		24" [610]	43" [1092]			XA-B924G	XA-B24G	RK-10689-3	499.00 [226.34]
FW80B936GL__	FW8-7001G4L__	FW8-7011G4L__		36" [914]	55" [1397]			XA-B936G	XA-B36G	RK-10689-3	546.00 [247.66]
FW80B948GL__	FW8-7001G5L__	FW8-7011G5L__		48" [1219]	67" [1702]			XA-B948G	XA-B48G	RK-10689-3	592.00 [268.53]

◊ For right-hand release fifth wheels, change "L" to "R" in part number.
* No longer available.
** See bracket section for more information.

 Amendments and errors reserved. © SAF-HOLLAND, Inc.

FW8 Sliding Traditional No Tilt Inboard with Angle Mount

Discontinued - Replacement Parts Only



Air Release Shown.

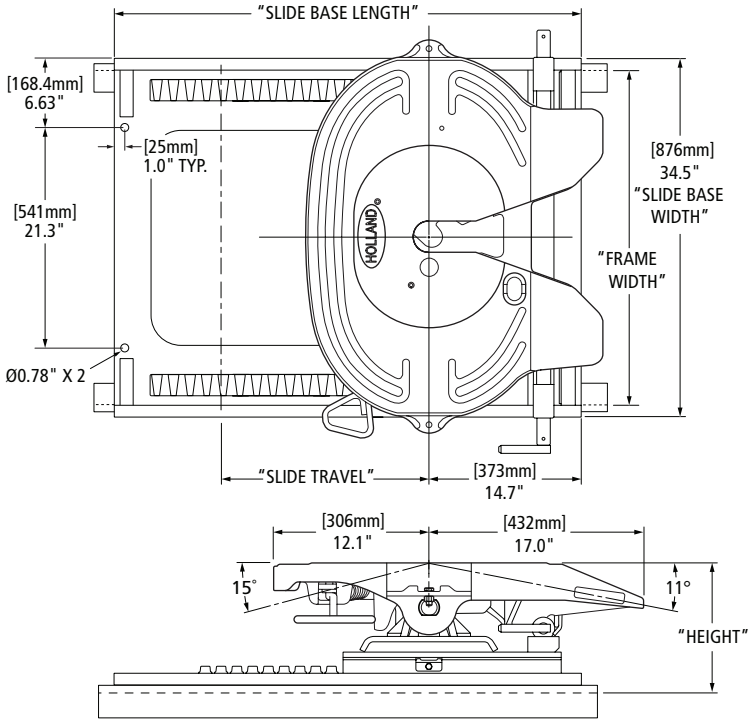

Frame width "A-Q": .38" x 4" x 4" angle

STANDARD OPTION CODES Replaces the Underscore (__) on the part number.	
NUMBER CODE	DESCRIPTION
06	Standard No-Tilt, No Other Options
44	Weight Saver Cutout and No-Tilt

FRAME WIDTH CODE CHART					
CODE	FRAME WIDTH	CODE	FRAME WIDTH	CODE	FRAME WIDTH
A	33.25"	F	33.88"	M	34.62"
B	33.38"	G†	34.00"	N	34.75"
C	33.50"	H	34.12"	P	34.88"
D	33.62"	K	34.38"	Q	35.00"
E	33.75"	L	34.50"		

† Standard

PART NUMBER*◊	SLIDE BRACKET TYPE	HEIGHT	SLIDE TRAVEL	SLIDE BASE LENGTH	REPLACEMENT SLIDE BASE AND BRACKET**	REPLACEMENT SLIDE BASE**	REPLACEMENT BRACKET **	FW WEIGHT LBS [KG]
FW8-7401G2L__	Air Release	9.0"	13.9"	38.9" [988]	XA-7401-G2-__	XA-0752-G2-__	XA-7401	600.00 [272.16]
FW8-7401G3L__			20.0"	45.0" [1143]	XA-7401-G3-__	XA-0752-G3-__		638.00 [289.39]
FW8-7401G4L__			32.2"	57.2" [1453]	XA-7401-G4-__	XA-0752-G4-__		710.00 [322.05]
FW8-7401G5L__			44.4" [1128]	69.5" [1765]	XA-7401-G5-__	XA-0752-G5-__		775.00 [351.53]
FW8-7401G6L__			56.7"	82.0" [2083]	XA-7401-G6-__	XA-0752-G6-__		846.00 [383.74]
FW8-7409G2L__		10.5"	13.9"	38.9" [988]	XA-7409-G2-__	XA-0752-G2-__	XA-7409	630.00 [285.76]
FW8-7409G3L__			20.0"	45.0" [1143]	XA-7409-G3-__	XA-0752-G3-__		668.00 [303.00]
FW8-7409G4L__			32.2"	57.2" [1453]	XA-7409-G4-__	XA-0752-G4-__		740.00 [335.66]
FW8-7409G5L__			44.4" [1128]	69.5" [1765]	XA-7409-G5-__	XA-0752-G5-__		805.00 [365.14]
FW8-7409G6L__			56.7"	82.0" [2083]	XA-7409-G6-__	XA-0752-G6-__		876.00 [397.35]

◊ For right-hand release fifth wheels, change "L" to "R" in part number.
* No longer available.
** See bracket section for more information.

NOTE: See Accessories Section for No-Tilt Kits. Not included in Replacement Bracket part number.

XL-FW10081PM-en-US Rev D 2016-03-01 Amendments and errors reserved. © SAF-HOLLAND, Inc.

PART NUMBER*◊	SLIDE BRACKET TYPE	HEIGHT	SLIDE TRAVEL	SLIDE BASE LENGTH	REPLACEMENT SLIDE BASE AND BRACKET**	REPLACEMENT SLIDE BASE**	REPLACEMENT BRACKET **	FW WEIGHT LBS [KG]
FW8-7411G2L__	MANUAL RELEASE	9.0"	13.9"	38.9" [988]	XA-7411-G2-__	XA-0752-G2-__	XA-7411	604.00 [273.97]
FW8-7411G3L__			20.0"	45.0" [1143]	XA-7411-G3-__	XA-0752-G3-__		642.00 [291.21]
FW8-7411G4L__			32.2"	57.2" [1453]	XA-7411-G4-__	XA-0752-G4-__		714.00 [323.86]
FW8-7411G5L__			44.4" [1128]	69.5" [1765]	XA-7411-G5-__	XA-0752-G5-__		779.00 [353.35]
FW8-7411G6L__			56.7"	82.0" [2083]	XA-7411-G6-__	XA-0752-G6-__		850.00 [385.55]
FW8-7419G2L__		10.5"	13.9"	38.9" [988]	XA-7419-G2-__	XA-0752-G2-__	XA-7419	634.00 [287.58]
FW8-7419G3L__			20.0"	45.0" [1143]	XA-7419-G3-__	XA-0752-G3-__		672.00 [304.81]
FW8-7419G4L__			32.2"	57.2" [1453]	XA-7419-G4-__	XA-0752-G4-__		744.00 [337.47]
FW8-7419G5L__			44.4" [1128]	69.5" [1765]	XA-7419-G5-__	XA-0752-G5-__		809.00 [366.96]
FW8-7419G6L__			56.7"	82.0" [2083]	XA-7419-G6-__	XA-0752-G6-__		880.00 [399.16]

◊ For right-hand release fifth wheels, change "L" to "R" in part number.
* No longer available.
** See bracket section for more information.

 Amendments and errors reserved. © SAF-HOLLAND, Inc.

FW8 Sliding Traditional Inboard with Angle Mount

Discontinued - Replacement Parts Only

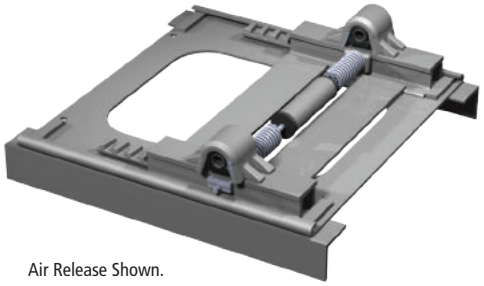

Air Release Shown.

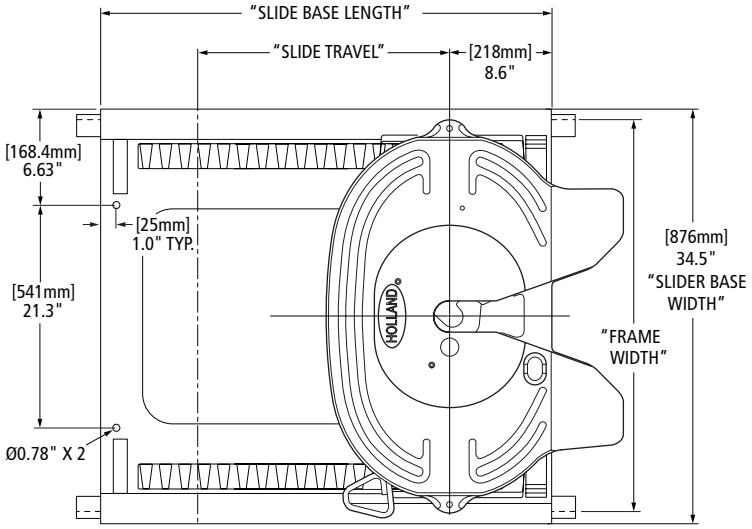

FRAME WIDTH CODE CHART					
CODE	FRAME WIDTH	CODE	FRAME WIDTH	CODE	FRAME WIDTH
A	33.25"	F	33.88"	M	34.62"
B	33.38"	G†	34.00"	N	34.75"
C	33.50"	H	34.12"	P	34.88"
D	33.62"	K	34.38"	Q	35.00"
E	33.75"	L	34.50"		

† Standard

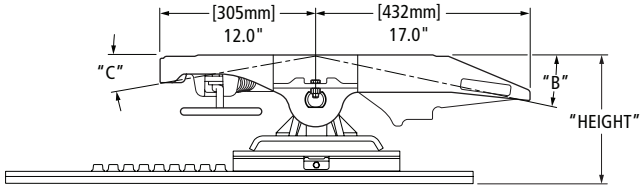

Frame Width "A-L": .38" x 4" x 4" Angle
"M-Q": .38" x 5" x 5" Angle (Option Code 21)
See option codes for other options.

STANDARD OPTION CODES Replaces the Underscore (__) on the new and legacy part number.	
NUMBER CODE	DESCRIPTION
00 / Blank	Standard, No Other Options
02	Manual Secondary Lock
11	Weight Saver Cutout
21	.38" x 5" x 5" Angle
24	Drilled and Tapped for Auto Lube
30	Manual Secondary Lock and Weight Saver Cutout
51	.38" x 4" x 6" Angle

STANDARD OPTION CODES Replaces the Underscore (__) on the new and legacy part number.	
NUMBER CODE	DESCRIPTION
55	Weight Saver Cutout and Drilled and Tapped for Auto Lube
64	Weight Saver Cutout and .38" x 5" x 5" Angle
66	Weight Saver Cutout and .31" x 4" x 4" Angle
80	Air Release, OEM Replacement Left-Hand Only
86	Air Release, Aftermarket Installations, Air Control Modules Included Left-Hand Only
90	Weight Saver Cutout and Air Release, OEM Replacement Left-Hand Only
95	Weight Saver Cutout and Air Release, Aftermarket Installations, Air Control Modules Included Left-Hand Only

LEGACY FW PART NUMBER*◊	REPLACED BY ILS FW PART NUMBER*◊	SLIDE BRACKET TYPE	HEIGHT	SLIDE TRAVEL	SLIDE BASE LENGTH	B	C	REPLACEMENT SLIDE BASE**	REPLACEMENT BRACKET**	FW WEIGHT LBS [KG]
FW8-7003G1L__	FW80B712GL__	Air Release	7.0"	10.7" [272]	38.9" [988]	10°	10°	XA-0753-G1-__	XA-7003	517.00 [234.51]
FW8-7003G2L__	FW80B724GL__			16.8" [427]	45.0" [1143]			XA-0753-G2-__		541.00 [245.39]
FW8-7003G3L__	FW80B724GL__			24.5" [622]	52.6" [1336]			XA-0753-G3-__		574.00 [260.36]
FW8-7003G4L__	FW80B736GL__			41.3" [1049]	69.5" [1765]			XA-0753-G4-__		632.00 [286.67]
FW8-7003G5L__	FW80B748GL__			53.6" [1361]	82.0" [2083]			XA-0753-G5-__		713.00 [323.41]
FW8-7003G6L__	—			65.8" [1671]	94.0" [2388]			XA-0753-G6-__		788.00 [357.43]
FW8-7002G1L__	FW80B812GL__		8.0"	12.2" [310]	32.8" [833]	13°	10°	XA-0753-G1-__	XA-7002	516.00 [234.05]
FW8-7002G2L__	FW80B824GL__			18.4" [467]	38.9" [988]			XA-0753-G2-__		565.00 [256.28]
FW8-7002G3L__	FW80B824GL__			24.5" [622]	45.0" [1143]			XA-0753-G3-__		587.00 [266.26]

◊ For right-hand release fifth wheels, change "L" to "R" in part number.
* No longer available.
** See bracket section for more information.

XL-FW10081PM-en-US Rev D 2016-03-01 Amendments and errors reserved. © SAF-HOLLAND, Inc.

LEGACY FW PART NUMBER*◊	REPLACED BY ILS FW PART NUMBER◊	SLIDE BRACKET TYPE	HEIGHT	SLIDE TRAVEL	SLIDE BASE LENGTH	B	C	REPLACEMENT SLIDE BASE**	REPLACEMENT BRACKET**	FW WEIGHT LBS [KG]
FW8-7002G4L__	FW80B836GL__	Air Release	8.0"	36.7" [932]	57.2" [1453]	13°	10°	XA-0753-G4-__	XA-7002	659.00 [298.92]
FW8-7002G5L__	FW80B848GL__			48.9" [1242]	69.5" [1765]			XA-0753-G5-__		734.00 [332.94]
FW8-7002G6L__	—			61.2" [1554]	82.0" [2083]			XA-0753-G6-__		805.00 [365.14]
FW8-7001G1L__	FW80B912GL__		9.0"	12.2" [310]	32.8" [833]	15°	15°	XA-0753-G1-__	XA-7001	516.00 [234.05]
FW8-7001G2L__	FW80B924GL__			18.4" [467]	38.9" [988]			XA-0753-G2-__		565.00 [256.28]
FW8-7001G3L__	FW80B924GL__			24.5" [622]	45.0" [1143]			XA-0753-G3-__		587.00 [266.26]
FW8-7001G4L__	FW80B936GL__			36.7" [932]	57.2" [1453]			XA-0753-G4-__		659.00 [298.92]
FW8-7001G5L__	FW80B948GL__			48.9" [1242]	69.5" [1765]			XA-0753-G5-__		734.00 [332.94]
FW8-7001G6L__	—			61.2" [1554]	82.0" [2083]			XA-0753-G6-__		805.00 [365.14]
FW8-7301G1L__	—		8.5"	10.7" [272]	38.9" [988]	15°	15°	XA-0753-G1-__	XA-7301	523.00 [237.23]
FW8-7301G2L__	—			16.8" [427]	45.0" [1143]			XA-0753-G2-__		547.00 [248.12]
FW8-7301G3L__	—			24.5" [622]	52.6" [1336]			XA-0753-G3-__		580.00 [263.08]
FW8-7301G4L__	—			41.3" [1049]	69.5" [1765]			XA-0753-G4-__		638.00 [289.39]
FW8-7301G5L__	—			53.6" [1361]	82.0" [2083]			XA-0753-G5-__		719.00 [326.13]
FW8-7301G6L__	—			65.8" [1671]	94.0" [2388]			XA-0753-G6-__		794.00 [360.15]
FW8-7009G2L__	—		10.5"	13.8" [351]	38.9" [988]	15°	15°	XA-0752-G2-__	XA-7009	598.00 [271.25]
FW8-7009G3L__	—			19.9" [505]	45.0" [1143]			XA-0752-G3-__		626.00 [283.95]
FW8-7009G4L__	—			32.1" [815]	57.2" [1453]			XA-0752-G4-__		692.00 [313.89]
FW8-7009G5L__	—			44.4" [1128]	69.5" [1765]			XA-0752-G5-__		773.00 [350.63]
FW8-7009G6L__	—			56.6" [1438]	82.0" [2083]			XA-0752-G6-__		844.00 [382.83]
FW8-7009G7L__	—			68.8" [1748]	94.0" [2388]			XA-0752-G7-__		904.00 [410.05]
FW8-7013G1L__	FW80B712GL__	Manual Release	7.0"	10.7" [272]	38.9"[988]	10°	10°	XA-0753-G1-__	XA-7013	507.00 [229.97]
FW8-7013G2L__	FW80B724GL__			16.8" [427]	45.0" [1143]			XA-0753-G2-__		531.00 [240.86]
FW8-7013G3L__	FW80B724GL__			24.5" [622]	52.6" [1336]			XA-0753-G3-__		564.00 [255.83]
FW8-7013G4L__	FW80B736GL__			41.3" [1049]	69.5" [1765]			XA-0753-G4-__		622.00 [282.13]
FW8-7013G5L__	FW80B748GL__			53.6" [1361]	82.0" [2083]			XA-0753-G5-__		703.00 [318.88]
FW8-7013G6L__	—			65.8" [1671]	94.0" [2388]			XA-0753-G6-__		778.00 [352.89]
FW8-7012G1L__	FW80B812GL__		8.0"	12.2" [310]	32.8" [833]	13°	10°	XA-0753-G1-__	XA-7012	520.00 [235.87]
FW8-7012G2L__	FW80B824GL__			18.4" [467]	38.9" [988]			XA-0753-G2-__		569.00 [258.09]
FW8-7012G3L__	FW80B824GL__			24.5" [622]	45.0" [1143]			XA-0753-G3-__		591.00 [268.07]
FW8-7012G4L__	FW80B836GL__			36.7" [932]	57.2" [1453]			XA-0753-G4-__		663.00 [300.73]
FW8-7012G5L__	FW80B848GL__			48.9" [1242]	69.5" [1765]			XA-0753-G5-__		738.00 [334.75]
FW8-7012G6L__	—			61.2" [1554]	82.0" [2083]			XA-0753-G6-__		809.00 [366.96]
FW8-7011G1L__	FW80B912GL__		9.0"	12.2" [310]	32.8" [833]	15°	15°	XA-0753-G1-__	XA-7011	544.00 [246.75]
FW8-7011G2L__	FW80B924GL__			18.4" [467]	38.9" [988]			XA-0753-G2-__		593.00 [268.98]
FW8-7011G3L__	FW80B924GL__			24.5" [622]	45.0" [1143]			XA-0753-G3-__		597.00 [270.79]
FW8-7011G4L__	FW80B936GL__			36.7" [932]	57.2" [1453]			XA-0753-G4-__		669.00 [303.45]
FW8-7011G5L__	FW80B948GL__			48.9" [1242]	69.5" [1765]			XA-0753-G5-__		744.00 [337.47]
FW8-7011G6L__	—			61.2" [1554]	82.0" [2083]			XA-0753-G6-__		815.00 [369.68]
FW8-7311G1L__	—		8.5"	10.7" [272]	38.9" [988]	15°	15°	XA-0753-G1-__	XA-7311	523.00 [237.23]
FW8-7311G2L__	—			16.8" [427]	45.0" [1143]			XA-0753-G2-__		547.00 [248.12]
FW8-7311G3L__	—			24.5" [622]	52.6" [1336]			XA-0753-G3-__		580.00 [263.08]
FW8-7311G4L__	—			41.3" [1049]	69.5" [1765]			XA-0753-G4-__		638.00 [289.39]
FW8-7311G5L__	—			53.6" [1361]	82.0" [2083]			XA-0753-G5-__		719.00 [326.13]
FW8-7311G6L__	—			65.8" [1671]	94.0" [2388]			XA-0753-G6-__		794.00 [360.15]
FW8-7019G2L__	—		10.5"	13.8" [351]	38.9" [988]	15°	15°	XA-0752-G2-__	XA-7019	610.00 [276.69]
FW8-7019G3L__	—			19.9" [505]	45.0" [1143]			XA-0752-G3-__		632.00 [286.67]
FW8-7019G4L__	—			32.1" [815]	57.2" [1453]			XA-0752-G4-__		704.00 [319.33]
FW8-7019G5L__	—			44.4" [1128]	69.5" [1765]			XA-0752-G5-__		779.00 [353.35]
FW8-7019G6L__	—			56.6" [1438]	82.0" [2083]			XA-0752-G6-__		850.00 [385.55]
FW8-7019G7L__	—			68.8" [1748]	94.0" [2388]			XA-0752-G7-__		934.00 [423.66]

◊ For right-hand release fifth wheels, change "L" to "R" in part number.
* No longer available.
** See bracket section for more information.

 Amendments and errors reserved. © SAF-HOLLAND, Inc.

SAF-HOLLAND Group

FW8 Stationary Kompensator Inboard with Angle Mount

Discontinued - Replacement Parts Only



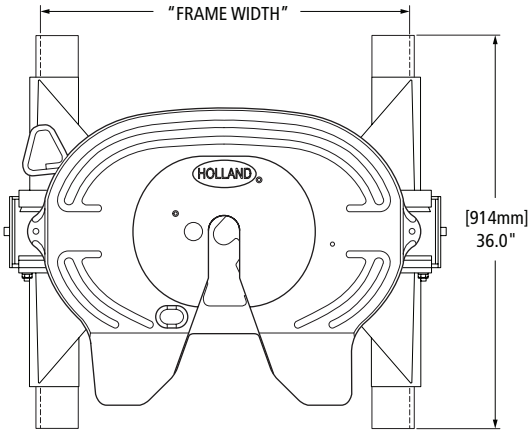

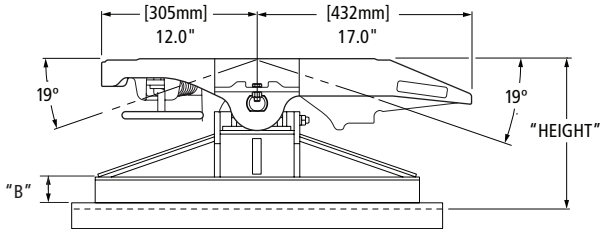

Frame width "A-L": .38" x 4" x 4" angle
"M-Q": .38" x 5" x 5" angle (option code 21)
See option codes for other options.

STANDARD OPTION CODES Replaces the Underscore (__) on the part number.	
NUMBER CODE	DESCRIPTION
Blank	Standard, No Other Options
19	Komp Lockouts
21	.38" x 5" x 5" Angle
24	Drilled and Tapped for Auto Lube
51	.38" x 4" x 6" Angle
OP	Drilled and Tapped for AutoLube, .38" x 4" x 6" Angle

PART NUMBER*◊	HEIGHT	B	REPLACEMENT BRACKET**	FW WEIGHT LBS [KG]
FW8-7711GL__	12.9"	3.00"	XA-40-7711-G	587.00 [266.26]
FW8-7712GL__	11.9"	2.00"	XA-40-7712-G	572.00 [259.45]
FW8-7713GL__	9.9"	— +	XA-40-7713-G	530.00 [240.40]

◊ For right-hand release fifth wheels, change "L" to "R" in part number.
* No longer available.
+ Kompensator frame bracket extends 1.2" below bottom side of angle.
** See bracket section for more information.

FRAME WIDTH CODE CHART					
CODE	FRAME WIDTH	CODE	FRAME WIDTH	CODE	FRAME WIDTH
A	33.25"	F	33.88"	M	34.62"
B	33.38"	G†	34.00"	N	34.75"
C	33.50"	H	34.12"	P	34.88"
D	33.62"	K	34.38"	Q	35.00"
E	33.75"	L	34.50"		

† Standard

XL-FW10081PM-en-US Rev D 2016-03-01 Amendments and errors reserved. © SAF-HOLLAND, Inc.

FW8 Sliding Kompensator Inboard with Angle Mount

Discontinued - Replacement Parts Only



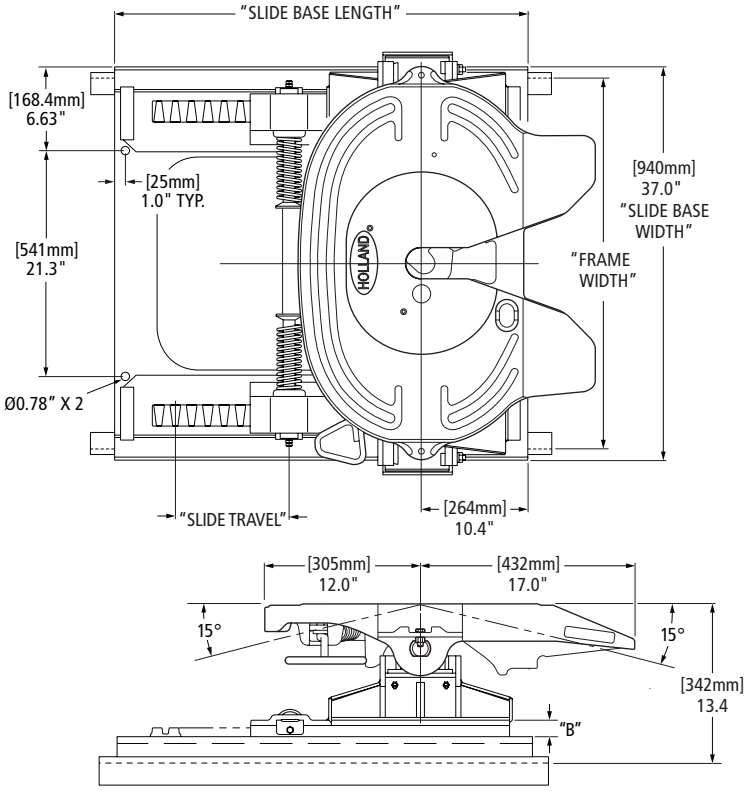

Frame width "A"-"K": .50" x 4" x 4" angle
See option codes for other angle sizes.

STANDARD OPTION CODES Replaces the Underscore (__) on the part number.	
NUMBER CODE	DESCRIPTION
Blank	Standard, No Other Options
19	Komp Lockouts
24	Drilled and Tapped for Auto Lube
83	Komp Lockouts & Drilled and Tapped for AutoLube

FRAME WIDTH CODE CHART					
CODE	FRAME WIDTH	CODE	FRAME WIDTH	CODE	FRAME WIDTH
A	33.25"	E	33.75"	L	34.50"
B	33.38"	F	33.88"	J	34.25"
C	33.50"	G†	34.00"	K	34.38"
D	33.62"	H	34.12"		

† Standard

PART NUMBER*◊	SLIDE TRAVEL	SLIDE BASE LENGTH	REPLACEMENT SLIDE BASE**	REPLACEMENT BRACKET**	FW WEIGHT LBS [KG]
FW8-7201G1L__	10.7" [272	38.9" [988]	XA-09790-G1	XA-7201	906.00 [410.95]
FW8-7201G2L__	16.8" [427]	45.0" [1143]	XA-09790-G2		943.00 [427.74]
FW8-7201G3L__	24.5" [622]	52.6" [1336]	XA-09790-G3A		1013.00 [459.49]
FW85-7201G4L__	41.3" [1049]	69.5" [1765]	XA-09790-G4		1075.00 [487.61]
FW8-7201G5L__	53.6" [1361]	82.0" [2083]	XA-09790-G5		1218.00 [552.48]
FW8-7201G6L__	65.8" [1671]	94.0" [2388]	XA-09790-G6		1318.00 [597.83]

◊ For right-hand release fifth wheels, change "L" to "R" in part number.
* No longer available.
** See bracket section for more information.

 Amendments and errors reserved. © SAF-HOLLAND, Inc.

Discontinued - Replacement Parts Only

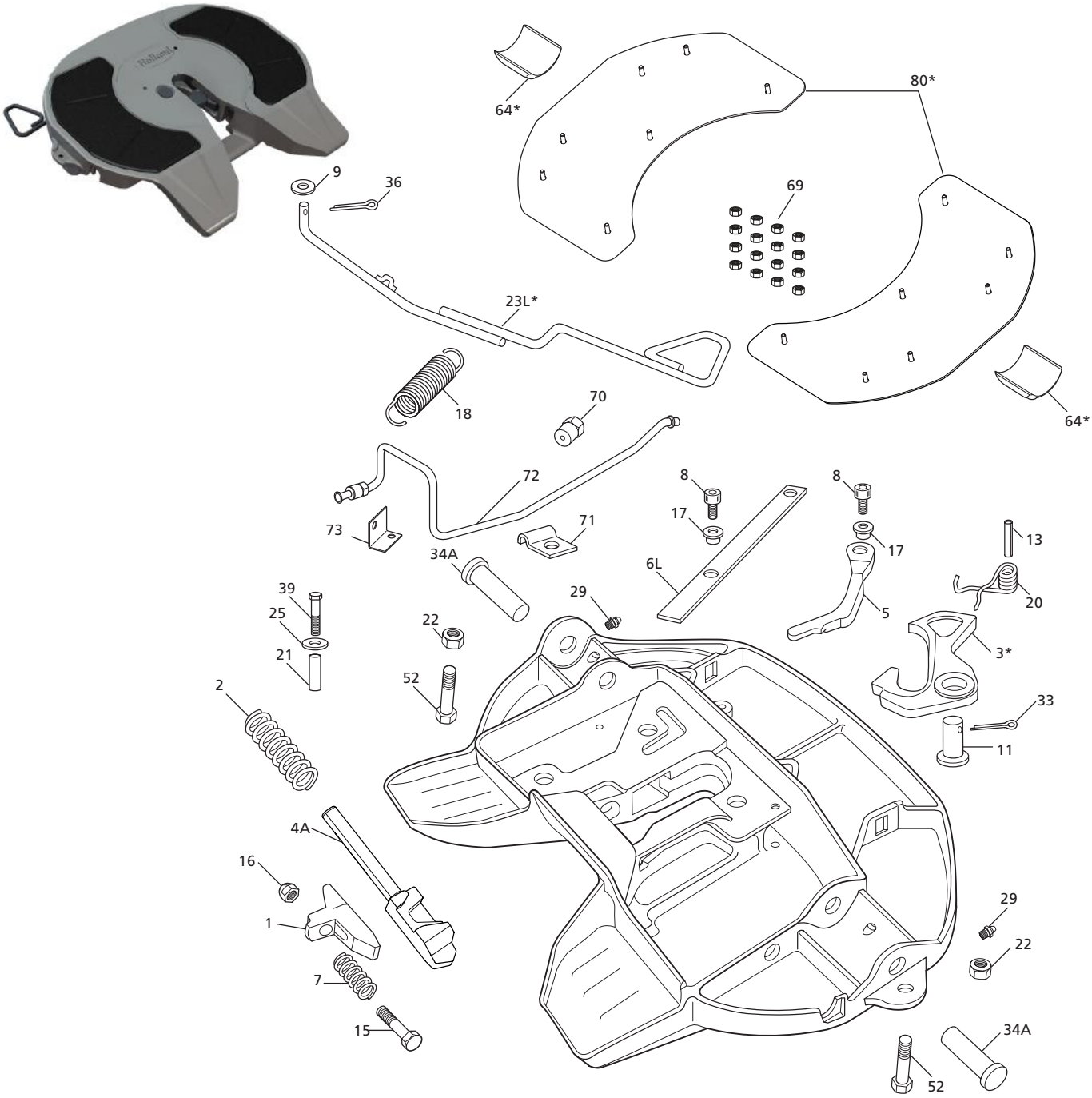

FOR RIGHT HAND RELEASE

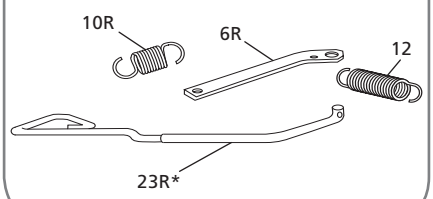

FOR MODELS EQUIPPED WITH MANUAL SECONDARY LOCK

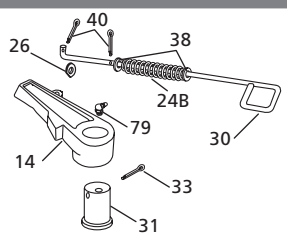

FOR AIR RELEASE MODELS

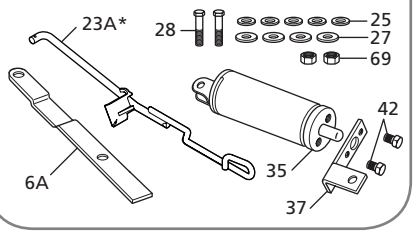

XL-FW10081PM-en-US Rev D 2016-03-01 Amendments and errors reserved. © SAF-HOLLAND, Inc.

FW83 PARTS LIST

ITEM	DESCRIPTION	PART NUMBER	QTY.	WEIGHT LBS [KG]
1	Wedge, Adjusting	XD-06328	1	1.65 [0.75]
2	Spring, Plunger	XB-06330	1	0.81 [0.37]
3*	Lock, Hinged	XA-09416	1	5.67 [2.57]
4A	Plunger, Locking, Models Mfg. After 9/1/99	XE-10474	1	6.02 [2.73]
5	Cam Arm	XE-09415	1	1.98 [0.90]
6A	Release Arm, Air	XA-10149	1	2.00 [0.91]
6L	Release Arm, Left-Hand	XA-09514	1	2.23 [1.01]
6R	Release Arm, Right-Hand	XA-09580	1	2.65 [1.20]
7	Spring, Compression	XB-09495	1	0.15 [0.07]
8	SHCS, .50"-13 x .75" Long	XB-08558	2	0.09 [0.04]
9	Washer, .66" I.D. x 1.31" O.D.	XB-T-199	1	0.03 [0.01]
10L	Spring, Extension, Left-Hand and Air	XB-09408	1	0.11 [0.05]
10R	Spring, Extension, Right-Hand Inner	XB-09629	1	0.08 [0.04]
11	Pin, Lock	XA-06344	1	1.44 [0.65]
12	Spring, Extension, Right-Hand Outer	XB-09581	1	0.28 [0.13]
13	Pin, Spring, .50" Dia. x 2.75" Long	XB-21-S-500-2750	1	0.02 [0.01]
14	Lock, Manual Secondary	XA-06349	1	2.57 [1.17]
15	HHCS, .63"-11 x 4.25" GR 8	XB-06329-1	1	0.45 [0.20]
16	Lock Nut, .63"-11	XB-06179-2	1	0.09 [0.04]
17	Roller, .51" I.D. x 1" O.D. x .69" Long	XA-08162	2	0.10 [0.05]
18	Spring, Extension, Left-Hand	XB-09517-1	1	0.17 [0.08]
19	Block Stop, Wedge	XA-09590	1	2.75 [1.25]
20	Spring, Lock Return	XB-08764	1	0.12 [0.06]
21	Spacer	XA-09558	1	0.06 [0.03]
22	Lock Nut, .50"-20 GR C	XB-T-69-A	2	0.04 [0.02]
23A*	Release Handle, Air Release	XA-10161	1	2.81 [1.27]
23L*	Release Handle, Left-Hand, See RK-09557	XA-09484	1	2.82 [1.28]
23R*	Release Handle, Right-Hand, See RK-09556	XA-09632	1	2.32 [1.05]
24B	Spring, Manual Release	XB-1028-1	1	0.10 [0.04]
25	Washer, .44" I.D. x 1.03" O.D., Left-Hand	XB-1108	1	0.02 [0.01]
	Washer, Air Release		5	0.02 [0.01]
26	Washer, .41" I.D. x .81" O.D., Clipped	XB-PWC-38-78	1	0.01 [0.005]
28	HHCS, .38"-16 x 1.75" GR 5	XB-V-444-3	2	0.06 [0.03]
29	Grease Zerk	XB-H-38	2	0.01 [0.005]
30	Release Handle, Lock, Manual Secondary	XA-06345	1	0.94 [0.43]
31	Pin, Lock, Manual Secondary	XA-1016-C	1	0.92 [0.42]
33	Pin, Cotter, .25" x 2" Long	XB-5	1	0.05 [0.02]
34A	Pin, Bracket	XE-06356-P	2	1.98 [0.90]
35	Air Cylinder	XA-2524-17	1	5.00 [2.27]
36	Pin, Cotter .19" x 1.25" Long	XB-06336	1	0.01 [0.005]
37	Bracket, Air Cylinder	XA-10164	1	0.28 [0.13]
38	Washer, .50" I.D. x 1.28" O.D., Manual Secondary Release	XB-1204	4	0.03 [0.01]
39	HHCS, .38"-16 x 2.25" GR 5	XB-C-38-C-214	1	0.09 [0.04]
40	Pin, Cotter, .13" Dia. x 1" Long	XB-06377	2	0.01 [0.005]
42	HHCS, .25"-28 x .50" GR 5	XB-01611	2	0.01 [0.005]

FW83 PARTS LIST

ITEM	DESCRIPTION	PART NUMBER	QTY.	WEIGHT LBS [KG]
44	Lube Tube Assembly	XA-10022	1	0.09 [0.04]
52	HHCS, .50"-20 x 1.25" GR 5	XB-C-95	2	0.11 [0.05]
64*	Pocket Insert, See RK-PKT-2	XD-08908	2	1.72 [0.78]
69	Lock Nut, .38"-16 GR B	XB-338	2	0.02 [0.01]
70	Fitting, Connector, Female	XB-09183	1	0.02 [0.01]
71	Clip, Tube	XB-09184-1	1	0.01 [0.005]
73	Bracket, Angle	XA-10016	1	0.06 [0.03]
79	Fittings, Grease, 45°	XB-767-C	1	0.01 [0.005]
80*	Lube Plate	XA-10194	2	4.64 [2.10]

*Not sold individually - must be purchased in kit.

NOTE: See Accessories Section for Air Release Kits.

REPLACEMENT TOP PLATE PART NUMBERS

PART NUMBER	DESCRIPTION
XA-231-A-P	Right-Hand Release with Pins
XA-231-A-L-P	Left-Hand Release with Pins
XA-231-A-02-P	Manual Secondary Lock Right-Hand Release with Pins
XA-231-A-02-L-P	Manual Secondary Lock Left-Hand Release with Pins
XA-231-A-L-UP	Left-Hand Release, Long Handle with Pins

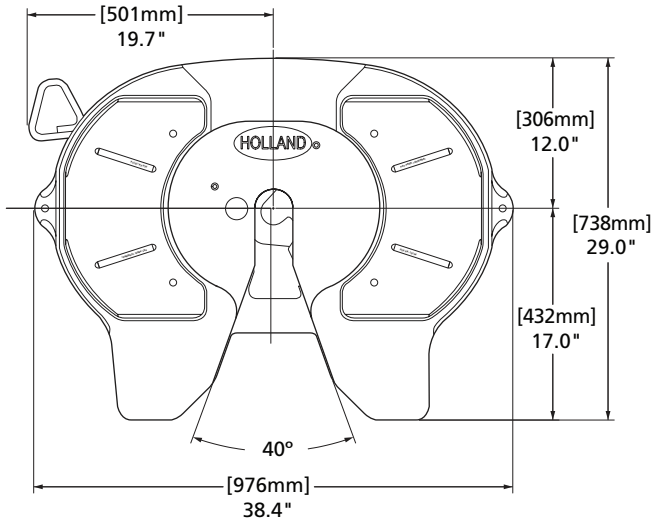

For XA-231 fifth wheel rebuild procedures, see Holland publication XL-FW355-03 at www.safholland.us

 Amendments and errors reserved. © SAF-HOLLAND, Inc.

SAF-HOLLAND Group

RK-09590-W
Wedge Stop and Plunger

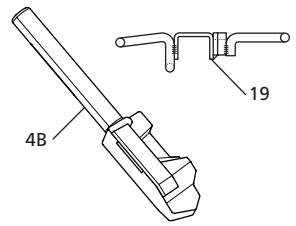

RK-06973-1
Pocket Inserts

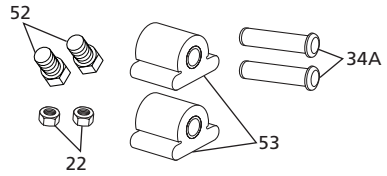

RK-09557
Release Handle Left-Hand

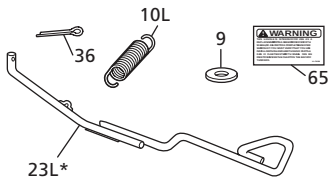

RK-09556
Release Handle Right-Hand

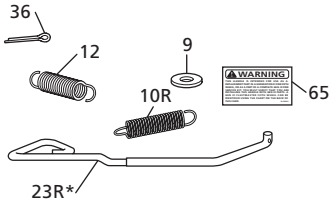

RK-09487
Release Handle, Left-hand - Long Handle

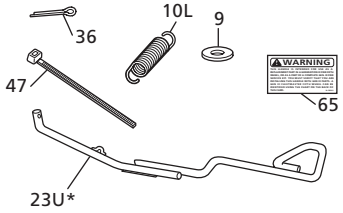

RK-10297
Lube Tube Assembly

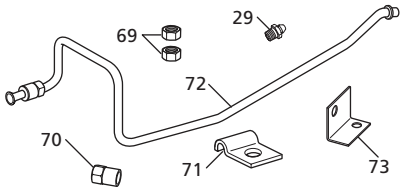

RK-231-1
Lube Plate

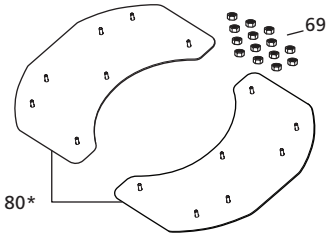

RK-231-3
Lube Plate and Pocket Inserts

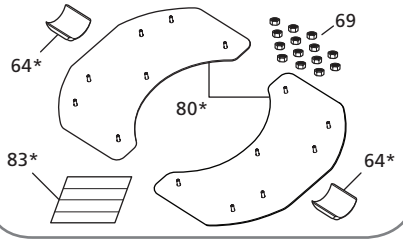

RK-PKT-2
Pocket Inserts

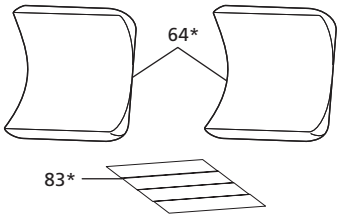

FW83 KIT PARTS LIST

ITEM	DESCRIPTION	PART NUMBER	QTY.	WEIGHT LBS [KG]
4B	Plunger, Locking, Models Manufactured Prior to 9/1/99	XA-10474	1	5.24 [2.38]
9	Washer, .66" I.D. x 1.31" O.D.	XB-T-199	1	0.03 [0.01]
10L	Spring, Extension, Left-Hand & Air	XB-09408	1	0.11 [0.05]
10R	Spring, Extension, Handle, Inner, Right Hand	XB-09629	1	0.08 [0.04]
12	Spring, Extension, Handle, Outer, Right Hand	XB-09581	1	0.28 [0.13]
19	Wedge Block Stop	XA-09590	1	2.75 [1.25]
22	Lock Nut, .50" -20 GR C	XB-T-69-A	2	0.04 [0.02]
23L*	Release Handle, Left-Hand	XA-09484	1	2.82 [1.28]
23R*	Release Handle, Right-Hand	XA-09632	1	2.32 [1.05]
23U*	Release Handle, Left-Hand, Long Handle	XA-09487	1	3.15 [1.43]
29	Grease Zerk	XB-H-38	1	0.01 [0.005]
34A	Pin, Bracket	XE-06356-P	2	1.98 [0.90]

FW83 KIT PARTS LIST

ITEM	DESCRIPTION	PART NUMBER	QTY.	WEIGHT LBS [KG]
36	Pin, Cotter, .19" Dia. x 1.25" Long	XB-06336	1	0.01 [0.005]
47	Nylon Cable Ties	XB-01961	1	0.01 [0.005]
52	HHCS, .50" -20 x 1.25" GR 5	XB-C-95	2	0.11 [0.05]
53	Cushion, Rubber	XB-0011-2	2	0.60 [0.27]
64*	Pocket Insert	XD-08908	2	1.72 [0.78]
65	Tag, Warning	XL-FW361	1	N/A
69	Lock Nut, .31"-18 GR B	XB-08931	14	0.01 [0.005]
70	Fitting, Connector, Female	XB-09183	1	0.02 [0.01]
71	Clip, Tube	XB-09184-1	1	0.01 [0.005]
72	Lube Tube Assembly	XA-10022	1	0.09 [0.04]
73	Bracket, Angle	XA-10016	1	0.06 [0.03]
80*	Lube Plate	XA-10194	2	4.64 [2.10]
83*	Tape, Double Face	XB-09422	4	0.01 [0.005]

*Not sold individually - must be purchased in kit.

XL-FW10081PM-en-US Rev D 2016-03-01 Amendments and errors reserved. © SAF-HOLLAND, Inc.

RK-201-A3-L
Complete Rebuild, Left-Hand Release, Mfg. After 9/1/99

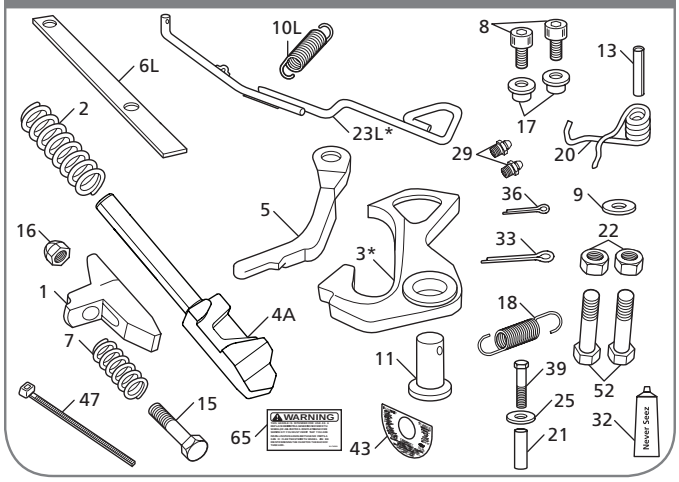

RK-201-A3-L-W
Complete Rebuild, Left-Hand Release, Mfg. Prior 9/1/99

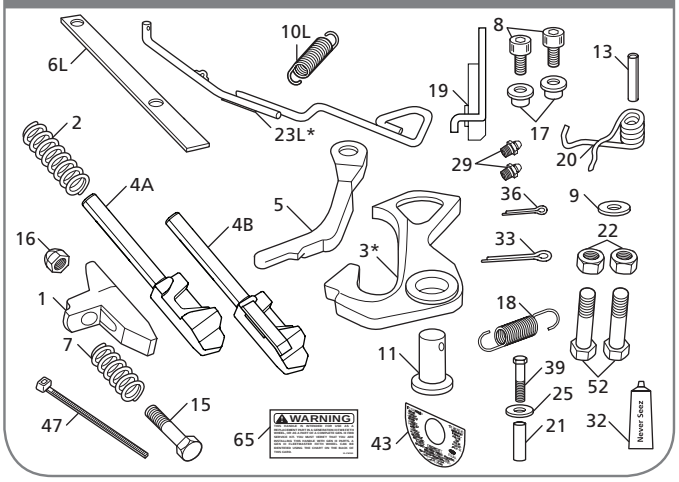

FW83 KIT PARTS LIST

ITEM	DESCRIPTION	PART NUMBER	QTY.	WEIGHT LBS [KG]
1	Wedge, Adjusting	XD-06328	1	1.65 [0.75]
2	Spring, Plunger	XB-06330	1	0.81 [0.37]
3*	Lock, Hinged	XA-09416	1	5.67 [2.57]
4A	Plunger, Locking, Models Manufactured After 9/1/99	XE-10474	1	6.02 [2.73]
4B	Plunger, Locking, Models Manufactured Prior to 9/1/99	XA-10474	1	5.24 [2.38]
5	Arm, Cam	XE-09415	1	1.98 [0.90]
6L	Release Arm, Left-Hand	XA-09514	1	2.23 [1.01]
7	Spring, Manual Release	XB-09495	1	0.15 [0.07]
8	SHCS, .50"-13 x .75" Long	XB-08558	2	0.09 [0.04]
9	Washer, .66" I.D. x 1.31" O.D.	XB-T-199	1	0.03 [0.01]
10L	Spring, Extension, Left-Hand & Air	XB-09408	1	0.11 [0.05]
11	Pin, Lock	XA-06344	1	1.44 [0.65]
13	Pin, Spring, .50" Dia. x 2.75" Long	XB-21-S-500-2750	1	0.02 [0.01]
15	HHCS, .63"-11 x 4.25" Gr 8	XB-06329-1	1	0.45 [0.20]
16	Lock Nut, .63"-11	XB-06179-2	1	0.09 [0.04]
17	Roller, .51" I.D. x 1" O.D. x .69" Long	XA-08162	2	0.10 [0.05]
18	Spring, Extension, Left-Hand	XB-09517-1	1	0.17 [0.08]

FW83 KIT PARTS LIST

ITEM	DESCRIPTION	PART NUMBER	QTY.	WEIGHT LBS [KG]
19	Wedge Block Stop	XA-09590	1	2.75 [1.25]
20	Spring, Lock Return	XB-08764	1	0.12 [0.06]
21	Spacer	XA-09558	1	0.06 [0.03]
22	Lock Nut, .50"-20 Gr C	XB-T-69-A	2	0.04 [0.02]
23L*	Release Handle, Left-Hand, See RK-09557	XA-09484	1	2.82 [1.28]
25	Washer, .44" I.D. x 1.03" O.D.	XB-1108	1	0.02 [0.01]
29	Fittings, Grease	XB-H-38	2	0.01 [0.005]
32	Never-Seez, 7.5g Tube	XB-02967	1	N/A
33	Pin, Cotter, .25" Dia. x 2" Long	XB-5	1	0.05 [0.02]
36	Pin, Cotter, .19" Dia. x 1.25" Long	XB-06336	1	0.01 [0.005]
39	HHCS, .38"-16 x 2.25" Gr 5	XB-C-38-C-214	1	0.09 [0.04]
43	Tag, Operation (Service Part Only)	XB-06936	1	N/A
47	Nylon Cable Ties, See RK-09646 and RK-06535	XB-01961	1	0.01 [0.005]
52	HHCS, .50"-20 x 1.25" Gr 5	XB-C-95	2	0.11 [0.05]
65	Tag, Warning	XL-FW361	1	N/A

*Not sold individually - must be purchased in kit.

 Amendments and errors reserved. © SAF-HOLLAND, Inc.

SAF-HOLLAND Group

RK-201-A3
Complete Rebuild, Right-Hand Release, Mfg. After 9/1/99

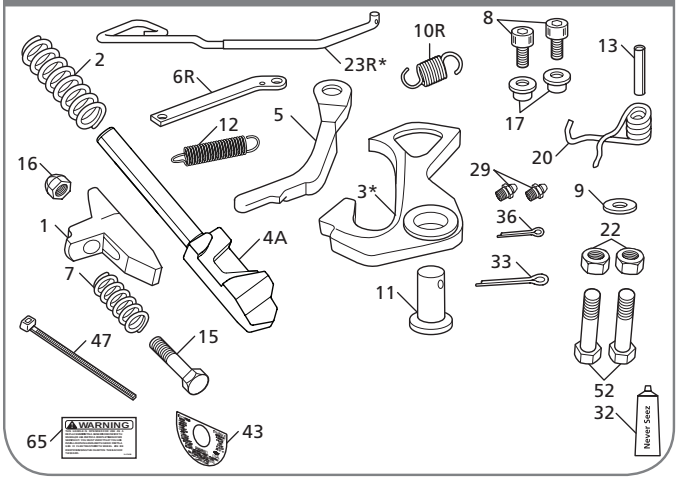

RK-201-A3-W
Complete Rebuild, Right-Hand Release, Mfg. Prior 9/1/99

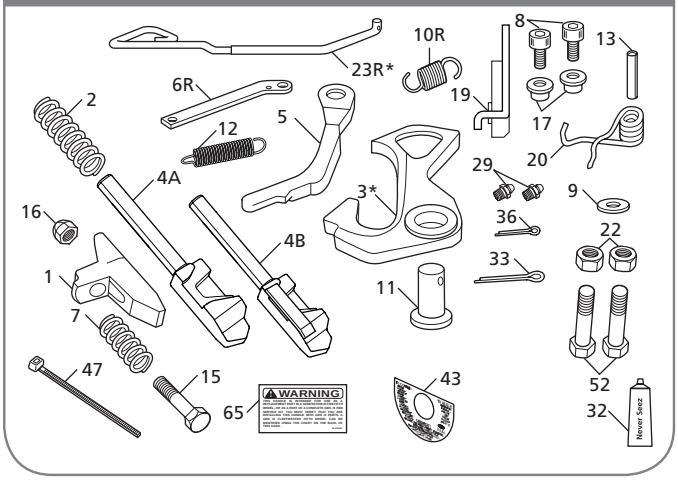

FW83 KIT PARTS LIST

ITEM	DESCRIPTION	PART NUMBER	QTY.	WEIGHT LBS [KG]
1	Wedge, Adjusting	XD-06328	1	1.65 [0.75]
2	Spring, Plunger	XB-06330	1	0.81 [0.37]
3*	Lock, Hinged	XA-09416	1	5.67 [2.57]
4A	Plunger, Locking, Models Manufactured after 9/1/99	XE-10474	1	6.02 [2.73]
4B	Plunger, Locking, Models Manufactured prior to 9/1/99	XA-10474	1	5.24 [2.38]
5	Arm, Cam	XE-09415	1	1.98 [0.90]
6R	Release Arm, Right-Hand	XA-09580	1	2.65 [1.20]
7	Spring, Manual Release	XB-09495	1	0.15 [0.07]
8	SHCS, .50"-13 x .75" Long	XB-08558	2	0.09 [0.04]
9	Washer, .66" I.D. x 1.31" O.D.	XB-T-199	1	0.03 [0.01]
10R	Spring, Extension, Handle, Inner, Right Hand	XB-09629	1	0.08 [0.04]
11	Pin, Lock	XA-06344	1	1.44 [0.65]
12	Spring, Extension, Handle, Outer, Right Hand	XB-09581	1	0.28 [0.13]
13	Pin, Spring, .50" Dia. x 2.75" Long	XB-21-S-500-2750	1	0.02 [0.01]
15	HHCS, .63"-11 x 4.25" Gr 8	XB-06329-1	1	0.45 [0.20]

FW83 KIT PARTS LIST

ITEM	DESCRIPTION	PART NUMBER	QTY.	WEIGHT LBS [KG]
16	Lock Nut, .63" -11	XB-06179-2	1	0.09 [0.04]
17	Roller, .51" I.D. x 1" O.D. x .69" Long	XA-08162	2	0.10 [0.05]
19	Wedge Block Stop	XA-09590	1	2.75 [1.25]
20	Spring, Lock Return	XB-08764	1	0.12 [0.06]
22	Lock Nut, .50"-20 Gr C	XB-T-69-A	2	0.04 [0.02]
23R*	Release Handle, Right-Hand, See RK-09556	XA-09632	1	2.32 [1.05]
29	Fittings, Grease	XB-H-38	2	0.01 [0.005]
32	Never-Seez, 7.5g Tube	XB-02967	1	N/A
33	Pin, Cotter, .25" Dia. x 2" Long	XB-5	1	0.05 [0.02]
36	Pin, Cotter, .19" Dia. x 1.25" Long	XB-06336	1	0.01 [0.005]
43	Tag, Operation (Service Part Only)	XB-06936	1	N/A
47	Nylon Cable Ties	XB-01961	1	0.01 [0.005]
52	HHCS, .50"-20 x 1.25" Gr 5	XB-C-95	2	0.11 [0.05]
65	Tag, Warning	XL-FW361	1	N/A

*Not sold individually - must be purchased in kit.

XL-FW10081PM-en-US Rev D 2016-03-01 Amendments and errors reserved. © SAF-HOLLAND, Inc.

RK-201-A3-02-L
Complete Rebuild, Secondary Lock, Left-Hand Release, Mfg. After 9/1/99

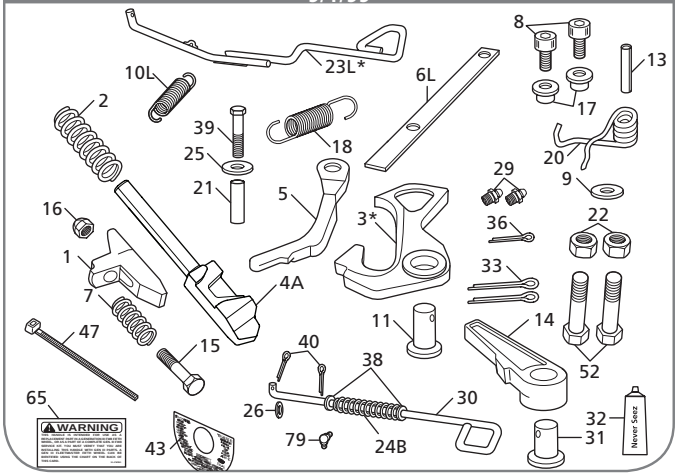

RK-201-A3-02-L-W
Complete Rebuild, Secondary Lock, Left-Hand Release, Mfg. Prior 9/1/99

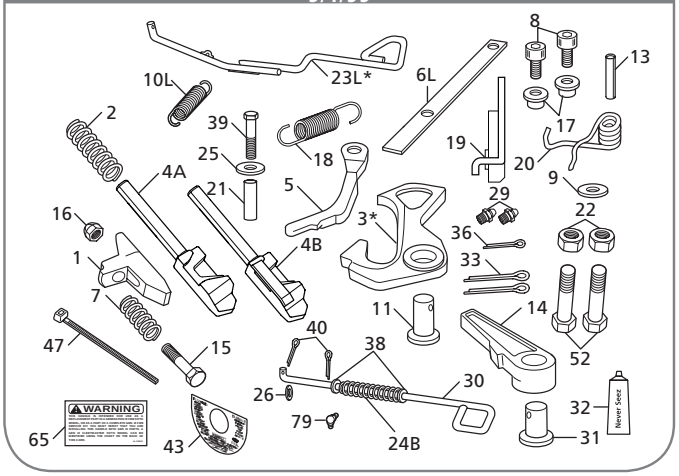

FW83 KIT PARTS LIST

ITEM	DESCRIPTION	PART NUMBER	QTY.	WEIGHT LBS [KG]
1	Wedge, Adjusting	XD-06328	1	1.65 [0.75]
2	Spring, Plunger	XB-06330	1	0.81 [0.37]
3*	Lock, Hinged	XA-09416	1	5.67 [2.57]
4A	Plunger, Locking, Models Manufactured After 9/1/99	XE-10474	1	6.02 [2.73]
4B	Plunger, Locking, Models Manufactured Prior to 9/1/99	XA-10474	1	5.24 [2.38]
5	Arm, Cam	XE-09415	1	1.98 [0.90]
6L	Release Arm, Left-Hand	XA-09514	1	2.23 [1.01]
7	Spring, Manual Release	XB-09495	1	0.15 [0.07]
8	SHCS, .50"-13 x .75" Long	XB-08558	2	0.09 [0.04]
9	Washer, .66" I.D. x 1.31" O.D.	XB-T-199	1	0.03 [0.01]
10L	Spring, Extension, Left-Hand & Air	XB-09408	1	0.11 [0.05]
11	Pin, Lock	XA-06344	1	1.44 [0.65]
13	Pin, Spring, .50" Dia. x 2.75" Long	XB-21-S-500-2750	1	0.02 [0.01]
14	Lock, Manual Secondary	XA-06349	1	2.57 [1.17]
15	HHCS, .63"-11 x 4.25" Gr 8	XB-06329-1	1	0.45 [0.20]
16	Lock Nut, .63"-11	XB-06179-2	1	0.09 [0.04]
17	Roller, .51" I.D. x 1" O.D. x .69" Long	XA-08162	2	0.10 [0.05]
18	Spring, Extension, Left-Hand	XB-09517-1	1	0.17 [0.08]
19	Wedge Block Stop	XA-09590	1	2.75 [1.25]
20	Spring, Lock Return	XB-08764	1	0.12 [0.06]
21	Spacer	XA-09558	1	0.06 [0.03]

FW83 KIT PARTS LIST

ITEM	DESCRIPTION	PART NUMBER	QTY.	WEIGHT LBS [KG]
22	Lock Nut, .50"-20 Gr C	XB-T-69-A	2	0.04 [0.02]
23L*	Release Handle, Left-Hand, See RK-09557	XA-09484	1	2.82 [1.28]
24B	Spring, Manual Release	XB-1028-1	1	0.10 [0.04]
25	Washer, .44" I.D. x 1.03" O.D.	XB-1108	1	0.02 [0.01]
26	Washer, Clipped, .41" I.D. x .81" O.D.	XB-PWC-38-78	1	0.01 [0.005]
29	Fittings, Grease	XB-H-38	2	0.01 [0.005]
30	Release Handle, Manual Secondary Lock	XA-06345	1	0.94 [0.43]
31	Pin, Manual Secondary Lock	XA-1016-C	1	0.92 [0.42]
32	Never-Seez, 7.5g Tube	XB-02967	1	N/A
33	Pin, Cotter, .25" Dia. x 2" Long	XB-5	2	0.05 [0.02]
36	Pin, Cotter, .19" Dia. x 1.25" Long	XB-06336	1	0.01 [0.005]
38	Washer, .50" I.D. x 1.28" O.D.	XB-1204	2	0.03 [0.01]
39	HHCS, .38"-16 x 2.25" Gr 5	XB-C-38-C-214	1	0.09 [0.04]
40	Pin, Cotter, .13" Dia. x 1" Long	XB-06377	2	0.01 [0.005]
43	Tag, Operation (Service Part Only)	XB-06936	1	N/A
47	Nylon Cable Ties	XB-01961	1	0.01 [0.005]
52	HHCS, .50" -20 x 1.25" Gr 5	XB-C-95	2	0.11 [0.05]
65	Tag, Warning	XL-FW361	1	N/A
79	Fittings, Grease 45°	XB-767-C	1	0.01 [0.005]

*Not sold individually - must be purchased in kit.

 Amendments and errors reserved. © SAF-HOLLAND, Inc.

RK-201-A3-02
Complete Rebuild, Secondary Lock, Right-Hand, Mfg. After 9/1/99

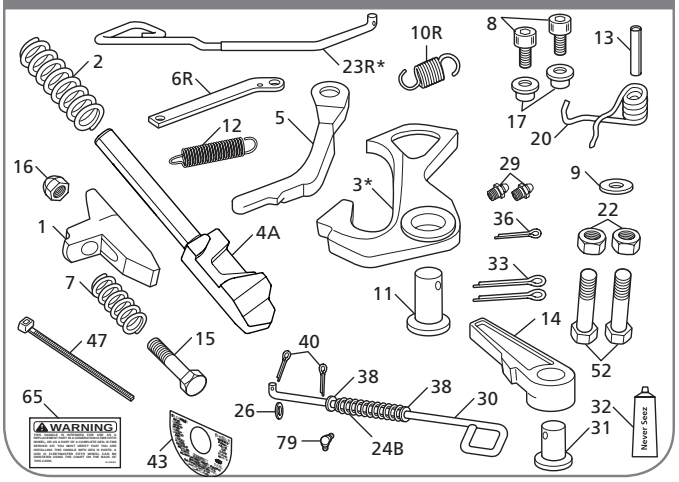

RK-201-A3-02-W
Complete Rebuild, Secondary Lock, Right-Hand, Mfg. Prior 9/1/99

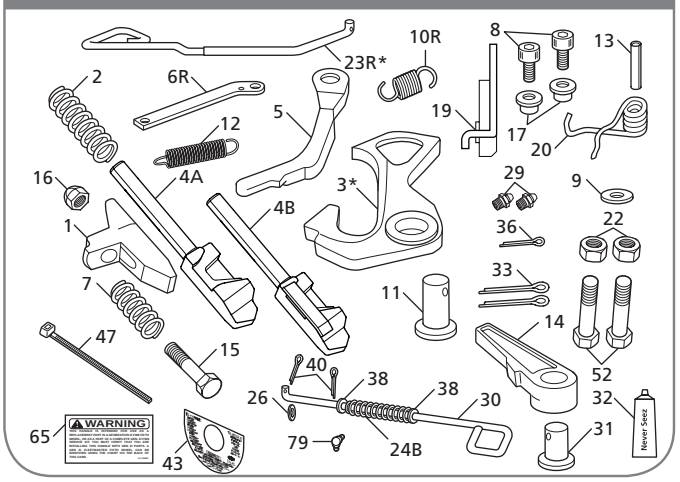

FW83 KIT PARTS LIST

ITEM	DESCRIPTION	PART NUMBER	QTY.	WEIGHT LBS [KG]
1	Wedge, Adjusting	XD-06328	1	1.65 [0.75]
2	Spring, Plunger	XB-06330	1	0.81 [0.37]
3*	Lock, Hinged	XA-09416	1	5.67 [2.57]
4A	Plunger, Locking, Models Manufactured After 9/1/99	XE-10474	1	6.02 [2.73]
4B	Plunger, Locking, Models Manufactured Prior to 9/1/99	XA-10474	1	5.24 [2.38]
5	Arm, Cam	XE-09415	1	1.98 [0.90]
6R	Release Arm, Right-Hand	XA-09580	1	2.65 [1.20]
7	Spring, Manual Release	XB-09495	1	0.15 [0.07]
8	SHCS, .50"-13 x .75" Long	XB-08558	2	0.09 [0.04]
9	Washer, .66" I.D. x 1.31" O.D.	XB-T-199	1	0.03 [0.01]
10R	Spring, Extension, Handle, Inner, Right Hand	XB-09629	1	0.08 [0.04]
11	Pin, Lock	XA-06344	1	1.44 [0.65]
12	Spring, Extension, Handle, Outer, Right Hand	XB-09581	1	0.28 [0.13]
13	Pin, Spring, .50" Dia. x 2.75" Long	XB-21-S-500-2750	1	0.02 [0.01]
14	Lock, Manual Secondary	XA-06349	1	2.57 [1.17]
15	HHCS, .63" -11 x 4.25" Gr 8	XB-06329-1	1	0.45 [0.20]
16	Lock Nut, .63" -11	XB-06179-2	1	0.09 [0.04]
17	Roller, .51" I.D. x 1" O.D. x .69" Long	XA-08162	2	0.10 [0.05]
19	Wedge Block Stop	XA-09590	1	2.75 [1.25]

FW83 KIT PARTS LIST

ITEM	DESCRIPTION	PART NUMBER	QTY.	WEIGHT LBS [KG]
20	Spring, Lock Return	XB-08764	1	0.12 [0.06]
22	Lock Nut, .50" -20 Gr C	XB-T-69-A	2	0.04 [0.02]
23R*	Release Handle, Right-Hand , See RK-09556	XA-09632	1	2.32 [1.05]
24B	Spring, Manual Release	XB-1028-1	1	0.10 [0.04]
26	Washer, Clipped, .41" I.D. x .81" O.D.	XB-PWC-38-78	1	0.01 [0.005]
29	Fittings, Grease	XB-H-38	2	0.01 [0.005]
30	Release Handle, Manual Secondary Lock	XA-06345	1	0.94 [0.43]
31	Pin, Manual Secondary Lock	XA-1016-C	2	0.92 [0.42]
32	Never-Seez, 7.5g Tube	XB-02967	1	N/A
33	Pin, Cotter, .25" Dia. x 2" Long	XB-5	2	0.05 [0.02]
36	Pin, Cotter, .19" Dia. x 1.25" Long	XB-06336	1	0.01 [0.005]
38	Washer, .50" I.D. x 1.28" O.D.	XB-1204	2	0.03 [0.01]
40	Pin, Cotter, .13" Dia. x 1" Long	XB-06377	2	0.01 [0.005]
43	Tag, Operation (Service Part Only)	XB-06936	1	N/A
47	Nylon Cable Ties	XB-01961	1	0.01 [0.005]
52	HHCS, .50"-20 x 1.25" Gr 5	XB-C-95	2	0.11 [0.05]
65	Tag, Warning	XL-FW361	1	N/A
79	Fittings, Grease 45°	XB-767-C	1	0.01 [0.005]

*Not sold individually - must be purchased in kit.

XL-FW10081PM-en-US Rev D 2016-03-01 Amendments and errors reserved. © SAF-HOLLAND, Inc.

RK-201-A3-14-L
Rebuild with Grease Fittings, Left-Hand Release, Mfg. After 9/1/99

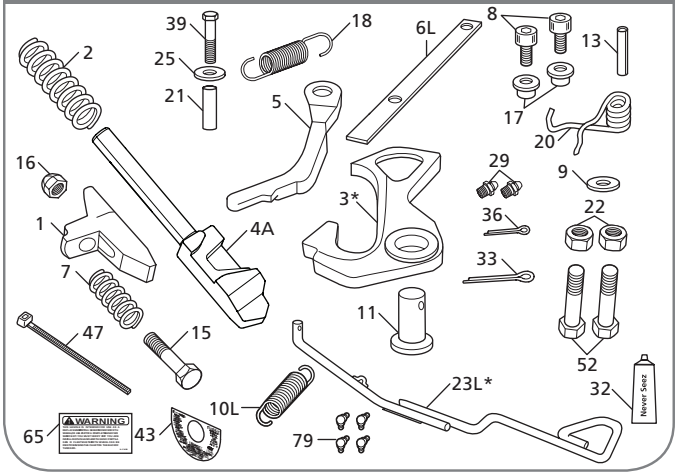

RK-201-A3-14-L-W
Rebuild with Grease Fittings, Left-Hand Release, Mfg. Prior 9/1/99

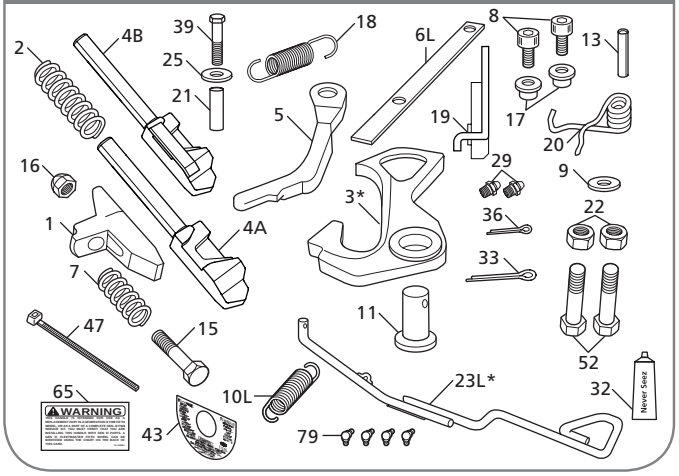

FW83 KIT PARTS LIST

ITEM	DESCRIPTION	PART NUMBER	QTY.	WEIGHT LBS [KG]
1	Wedge, Adjusting	XD-06328	1	1.65 [0.75]
2	Spring, Plunger	XB-06330	1	0.81 [0.37]
3*	Lock, Hinged	XA-09416	1	5.67 [2.57]
4A	Plunger, Locking, Models Manufactured After 9/1/99	XE-10474	1	6.02 [2.73]
4B	Plunger, Locking, Models Manufactured Prior to 9/1/99	XA-10474	1	5.24 [2.38]
5	Arm, Cam	XE-09415	1	1.98 [0.90]
6L	Release Arm, Left-Hand	XA-09514	1	2.23 [1.01]
7	Spring, Manual Release	XB-09495	1	0.15 [0.07]
8	SHCS, .50"-13 x .75" Long	XB-08558	2	0.09 [0.04]
9	Washer, .66" I.D. x 1.31" O.D.	XB-T-199	1	0.03 [0.01]
10L	Spring, Extension, Left-Hand & Air	XB-09408	1	0.11 [0.05]
11	Pin, Lock	XA-06344	1	1.44 [0.65]
13	Pin, Spring, .50" Dia. x 2.75" Long	XB-21-S-500-2750	1	0.02 [0.01]
15	HHCS, .63"-11 x 4.25" Gr 8	XB-06329-1	1	0.45 [0.20]
16	Lock Nut, .63"-11	XB-06179-2	1	0.09 [0.04]
17	Roller, .51" I.D. x 1" O.D. x .69" Long	XA-08162	2	0.10 [0.05]

FW83 KIT PARTS LIST

ITEM	DESCRIPTION	PART NUMBER	QTY.	WEIGHT LBS [KG]
18	Spring, Extension, Left-Hand	XB-09517-1	1	0.17 [0.08]
19	Wedge Block Stop	XA-09590	1	2.75 [1.25]
20	Spring, Lock Return	XB-08764	1	0.12 [0.06]
21	Spacer	XA-09558	1	0.06 [0.03]
22	Lock Nut, .50"-20 Gr C	XB-T-69-A	2	0.04 [0.02]
23L*	Release Handle, Left-Hand, See RK-09557	XA-09484	1	2.82 [1.28]
25	Washer, .44" I.D. x 1.03" O.D.	XB-1108	1	0.02 [0.01]
29	Fittings, Grease	XB-H-38	2	0.01 [0.005]
32	Never-Seez, 7.5g Tube	XB-02967	1	N/A
33	Pin, Cotter, .25" Dia. x 2" Long	XB-5	1	0.05 [0.02]
36	Pin, Cotter, .19" Dia. x 1.25" Long	XB-06336	1	0.01 [0.005]
39	HHCS, .38"-16 x 2.25" Gr 5"	XB-C-38-C-214	1	0.09 [0.04]
43	Tag, Operation (Service Part Only)	XB-06936	1	N/A
47	Nylon Cable Ties	XB-01961	1	0.01 [0.005]
52	HHCS, .50"-20 x 1.25" Gr 5	XB-C-95	2	0.11 [0.05]
65	Tag, Warning	XL-FW361	1	N/A
79	Fittings, Grease 45°	XB-H-38-C	4	0.02 [0.01]

*Not sold individually - must be purchased in kit.

 Amendments and errors reserved. © SAF-HOLLAND, Inc.

RK-201-A3-14
Rebuild with Grease Fittings, Right-Hand Release, Mfg. After 9/1/99

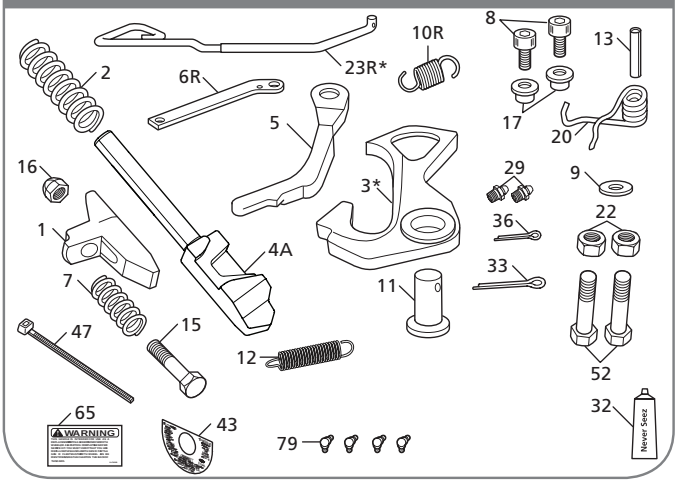

RK-201-A3-14-W
Rebuild with Grease Fittings, Right-Hand Release, Mfg. Prior 9/1/99

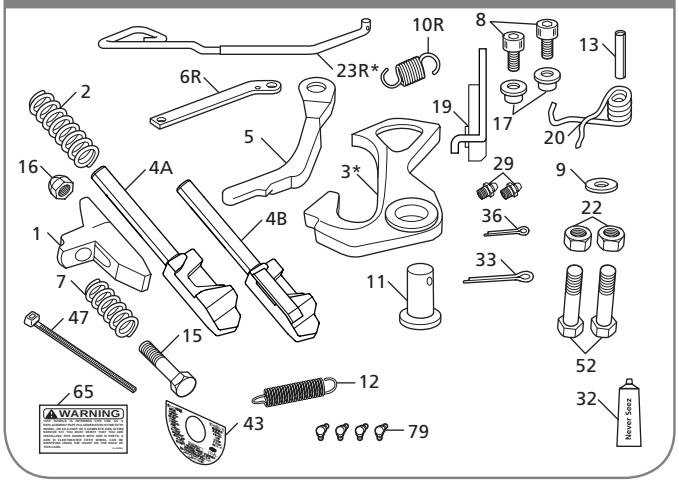

FW83 KIT PARTS LIST

ITEM	DESCRIPTION	PART NUMBER	QTY.	WEIGHT LBS [KG]
1	Wedge, Adjusting	XD-06328	1	1.65 [0.75]
2	Spring, Plunger	XB-06330	1	0.81 [0.37]
3*	Lock, Hinged	XA-09416	1	5.67 [2.57]
4A	Plunger, Locking, Models Manufactured After 9/1/99	XE-10474	1	6.02 [2.73]
4B	Plunger, Locking, Models Manufactured Prior to 9/1/99	XA-10474	1	5.24 [2.38]
5	Arm, Cam	XE-09415	1	1.98 [0.90]
6R	Release Arm, Right-Hand	XA-09580	1	2.65 [1.20]
7	Spring, Manual Release	XB-09495	1	0.15 [0.07]
8	SHCS, .50"-13 x .75" Long	XB-08558	2	0.09 [0.04]
9	Washer, .66" I.D. x 1.31" O.D.	XB-T-199	1	0.03 [0.01]
10R	Spring, Extension, Handle, Inner, Right Hand	XB-09629	1	0.08 [0.04]
11	Pin, Lock	XA-06344	1	1.44 [0.65]
12	Spring, Extension, Handle, Outer, Right Hand	XB-09581	1	0.28 [0.13]
13	Pin, Spring, .50" Dia. x 2.75" Long	XB-21-S-500-2750	1	0.02 [0.01]

FW83 KIT PARTS LIST

ITEM	DESCRIPTION	PART NUMBER	QTY.	WEIGHT LBS [KG]
15	HHCS, .63"-11 x 4.25" Gr 8	XB-06329-1	1	0.45 [0.20]
16	Lock Nut, .63"-11	XB-06179-2	1	0.09 [0.04]
17	Roller, .51" I.D. x 1" O.D. x .69" Long	XA-08162	2	0.10 [0.05]
19	Wedge Block Stop	XA-09590	1	2.75 [1.25]
20	Spring, Lock Return	XB-08764	1	0.12 [0.06]
22	Lock Nut, .50"-20 Gr C	XB-T-69-A	2	0.04 [0.02]
23R*	Release Handle, Right-Hand , See RK-09556	XA-09632	1	2.32 [1.05]
29	Fittings, Grease	XB-H-38	2	0.01 [0.005]
32	Never-Seez, 7.5g Tube	XB-02967	1	N/A
33	Pin, Cotter, .25" Dia. x 2" Long	XB-5	1	0.05 [0.02]
36	Pin, Cotter, .19" Dia. x 1.25" Long	XB-06336	1	0.01 [0.005]
43	Tag, Operation (Service Part Only)	XB-06936	1	N/A
47	Nylon Cable Ties	XB-01961	1	0.01 [0.005]
52	HHCS, .50"-20 x 1.25" Gr 5	XB-C-95	2	0.11 [0.05]
65	Tag, Warning	XL-FW361	1	N/A
79	Fittings, Grease 45°	XB-H-38-C	4	0.02 [0.01]

*Not sold individually - must be purchased in kit.

XL-FW10081PM-en-US Rev D 2016-03-01 Amendments and errors reserved. © SAF-HOLLAND, Inc.

RK-201-A3-L-UP
Complete Rebuild, Left-Hand Release with Long Handle, Mfg. After 9/1/99

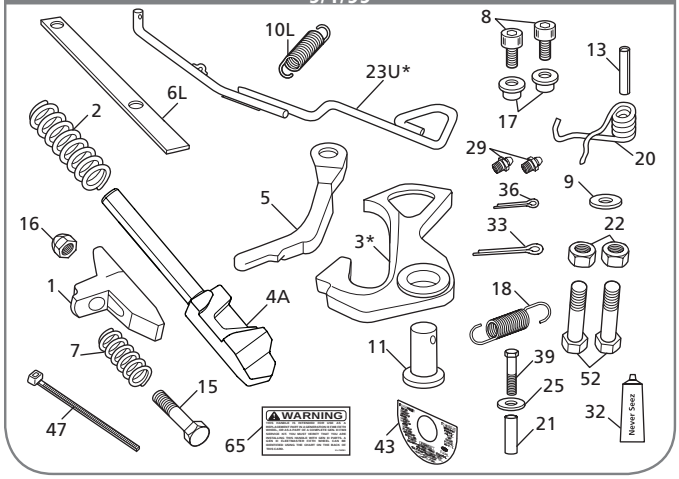

RK-201-A3-L-UP-W
Complete Rebuild, Left-Hand Release with Long Handle, Mfg. Prior 9/1/99

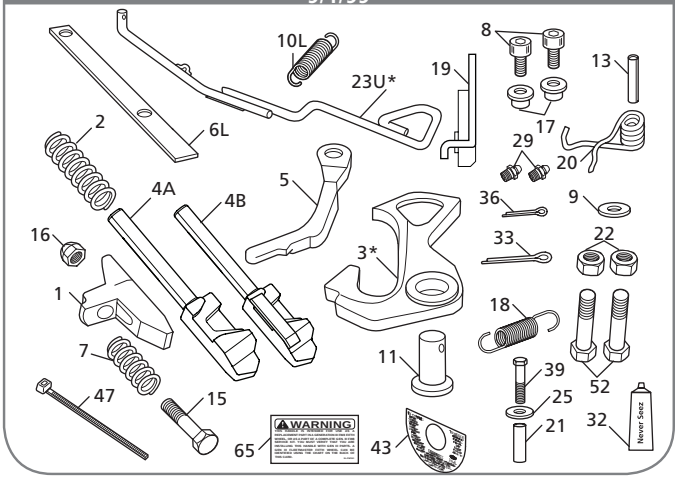

FW8 KIT PARTS LIST

ITEM	DESCRIPTION	PART NUMBER	QTY.	WEIGHT LBS [KG]
1	Wedge, Adjusting	XD-06328	1	1.65 [0.75]
2	Spring, Plunger	XB-06330	1	0.81 [0.37]
3*	Lock, Hinged	XA-09416	1	5.67 [2.57]
4A	Plunger, Locking, Models Manufactured After 9/1/99	XE-10474	1	6.02 [2.73]
4B	Plunger, Locking, Models Manufactured Prior to 9/1/99	XA-10474	1	5.24 [2.38]
5	Arm, Cam	XE-09415	1	1.98 [0.90]
6L	Release Arm, Left-Hand	XA-09514	1	2.23 [1.01]
7	Spring, Manual Release	XB-09495	1	0.15 [0.07]
8	SHCS, .50"-13 x .75" Long	XB-08558	2	0.09 [0.04]
9	Washer, .66" I.D. x 1.31" O.D.	XB-T-199	1	0.03 [0.01]
10L	Spring, Extension, Left-Hand & Air	XB-09408	1	0.11 [0.05]
11	Pin, Lock	XA-06344	1	1.44 [0.65]
13	Pin, Spring, .50" Dia. x 2.75" Long	XB-21-S-500-2750	1	0.02 [0.01]
15	HHCS, .63"-11 x 4.25" Gr 8	XB-06329-1	1	0.45 [0.20]
16	Lock Nut, .63"-11	XB-06179-2	1	0.09 [0.04]
17	Roller, .51" I.D. x 1" O.D. x .69" Long	XA-08162	2	0.10 [0.05]

FW8 KIT PARTS LIST

ITEM	DESCRIPTION	PART NUMBER	QTY.	WEIGHT LBS [KG]
18	Spring, Extension, Left-Hand	XB-09517-1	1	0.17 [0.08]
19	Wedge Block Stop	XA-09590	1	2.75 [1.25]
20	Spring, Lock Return	XB-08764	1	0.12 [0.06]
21	Spacer	XA-09558	1	0.06 [0.03]
22	Lock Nut, .50"-20 Gr C	XB-T-69-A	2	0.04 [0.02]
23U*	Release Handle, Left-Hand, Long Handle, See RK-09487	XA-09487	1	3.15 [1.43]
25	Washer, .44" I.D. x 1.03" O.D.	XB-1108	1	0.02 [0.01]
29	Fittings, Grease	XB-H-38	2	0.01 [0.005]
32	Never-Seez, 7.5g Tube	XB-02967	1	N/A
33	Pin, Cotter, .2" Dia. x 2" Long	XB-5	1	0.05 [0.02]
36	Pin, Cotter, .19" Dia. x 1.25" Long	XB-06336	1	0.01 [0.005]
39	HHCS, .38"-16 x 2.25" Gr 5	XB-C-38-C-214	1	0.09 [0.04]
43	Tag, Operation (Service Part Only)	XB-06936	1	N/A
47	Nylon Cable Ties	XB-01961	1	0.01 [0.005]
52	HHCS, .50"-20 x 1.25" Gr 5	XB-C-95	2	0.11 [0.05]
65	Tag, Warning	XL-FW361	1	N/A

*Not sold individually - must be purchased in kit.

 Amendments and errors reserved. © SAF-HOLLAND, Inc.

SAF-HOLLAND Group

ILS Style Fifth Wheel Assembly Part Numbers

General Holland prefix indicating complete fifth wheel assembly

SERIES	
83	FW83 Series

MOUNTING STYLE	
NO.	DESCRIPTION
Standard Duty Sliders	
A	Outboard (1 pc tie-bar)
B	Inboard (Serrated 3 pc tie-bar)
C	Inboard (Straight 3 pc tie-bar) (DTNA Air Fitting)
F	Outboard (1 pc tie-bar)
H	Inboard (1 pc tie-bar for PACCAR)
J	Outboard (1 pc tie-bar for PACCAR)
Standard Duty Stationaries	
Z	Integrated Plate Mount
Y	Foot Mount
X	Bracket Castings Only (No Angle or Base Plate)
W	Brackets w/4" Vert. Leg Angle
Specialty Mounting Systems	
K	Kompensator
N	No-Tilt

HEIGHT (approx.)	
NO.	DESCRIPTION
6	6" (Stationary only)
7	7"
8	8"
9	9"
0	10"
1	11" (Komp only)
2	12.0" [305] (Komp only)
3	13" (Komp only)

FW 83 X X XX X X XX

TRAVEL	
NO.	DESCRIPTION
00	Stationary
ILS Travel	
12	12"
18	18" (Only H & J) Mounting Style
24	24"
36	36"
48	48"
No-Tilt ILS Travel	
06	6"
18	18"
30	30"
42	42"
Kompensator Travel	
11	11"
17	17"
24	24"
41	41"
54	54"
66	66"

ANGLES	
NO.	DESCRIPTION
No Angle Mounting Systems	
W	Aftermarket Inboard No-Tilt & Komp (Serrated Edge)
X	Outboard Slider ***or*** Inboard Slider w/o Angles ***or*** Stationary w/o Angles
Y	Outboard No-Tilt & Komp
Z	OEM Inboard No-Tilt & Komp (straight edge)
Frame Width for Standard Duty Mounting Angles	
A	33.25"
B	33.38"
C	33.50"
D	33.62"
E	33.75
F	33.88"
G	34.00"
H	34.12"
J	34.25"
K	34.38"
L	34.50"

RELEASE HANDLE	
NO.	DESCRIPTION
L	Left-hand (Road-side)
R	Right-hand (Curb-side)

OPTION CODE*	
NO.	DESCRIPTION
00	No option
02	Manual Secondary Lock
24	Drilled & Tapped for Auto Lube
28	Dolly Release Handle
80	Air Release Top Plate
EL	Electronic Lock Indicator (ELI)
EA	ELI w/ Air Release Top Plate
8E	ELI w/Air Release Top Plate (PACCAR only)

NOTE: There are no "dashes" used for the complete fifthwheel assembly new part number

* Please note that not all options are are available on every top plate. Multiple option combinations are available.

XL-FW10081PM-en-US Rev D 2016-03-01 Amendments and errors reserved. © SAF-HOLLAND, Inc.

Traditional Style Stationary Fifth Wheel Assembly Part Numbers

General Holland prefix indicating complete fifth wheel assembly

SERIES	
83	FW83 Series

FRAME WIDTH			
LETTER	WIDTH	LETTER	WIDTH
X	No Angle	F	33.88"
A	33.25"	G	34.00"
B	33.38"	H	34.12"
C	33.50"	J	34.25"
D	33.62"	K	34.38"
E	33.75"	L	34.50"

RELEASE HANDLE	
NO.	DESCRIPTION
L	Left-hand (Road-side)
R	Right-hand (Curb-side)

FW 83 XXXX X X X XX

MOUNTING STYLE			
NO.	HEIGHT	NO.	HEIGHT
Foot Mount		*Bracket with Angle*	
7801	8.7"	7811	8.7"
7802	7.7"	7812	7.7"
7803	6.7"	7813	6.7"
7804	5.7"	7814	5.7"
Integrated Plate		*Bracket for Angle*	
7883	8.6"	7821	8.3"
8774	7.6"	7822	7.3"
7885	6.6"	7823	6.3"
7886	5.6"	7824	5.3"

SLIDE TRAVEL	
NO.	DESCRIPTION
1	12.2"
2	18.4"
3	24.5"
4	36.7"
5	48.9"

OPTION CODE*	
NO.	DESCRIPTION
BLANK	No option
02	Manual Secondary Lock
24	Drilled & Tapped for Auto Lube
Other Options Available	

Traditional Style Sliding Fifth Wheel Assembly Part Numbers

General Holland prefix indicating complete fifth wheel assembly

SERIES	
83	FW83 Series

FRAME WIDTH			
LETTER	WIDTH	LETTER	WIDTH
X	No Angle	G	34.00"
A	33.25"	H	34.12"
B	33.38"	J	34.25"
C	33.50"	K	34.38"
D	33.62"	L	34.50"
E	33.75"	*Outboard*	
F	33.88"	T	Angles not Included

RELEASE HANDLE	
NO.	DESCRIPTION
L	Left-hand (Road-side)
R	Right-hand (Curb-side)

FW 83 XXXX X X X XX

MOUNTING STYLE			
NO.	HEIGHT	NO.	HEIGHT
Over the Frame		*Outboard*	
7001	8.63"	8001	8.63"
7002	7.63"	8002	7.63"
7003	6.63"	8003	6.63"

SLIDE TRAVEL	
NO.	DESCRIPTION
1	12.2"
2	18.4"
3	24.5"
4	36.7"
5	48.9"

OPTION CODE*	
NO.	DESCRIPTION
BLANK	No option
02	Manual Secondary Lock
24	Drilled & Tapped for Auto Lube
Other Options Available	

 Amendments and errors reserved. © SAF-HOLLAND, Inc.

FW83 Stationary Foot Mount

Discontinued - Replacement Parts Only



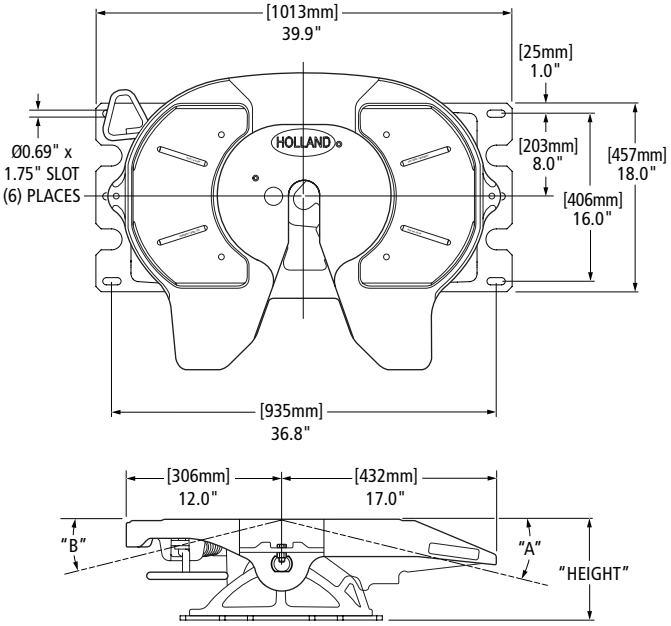

STANDARD OPTION CODES Replaces the Underscore (__) on the new and legacy part number.			
CODE	DESCRIPTION	CODE	DESCRIPTION
00 / Blank	Standard, No Other Options.	04	Mounting Plate and Manual Seconday Release Lock
01	Mounting Plate*	80	Air Release, OEM Replacement, Left-Hand Only
02	Manual Secondary Lock	86	Air Release, Aftermarket Installations, Left-Hand Only

* Corrugated Plate Option adds 0.9" to height.

FW PART NUMBER (CAST BRACKET)◊*	LEGACY FW PART NUMBER (FABRICATED BRACKET)◊*	HEIGHT	A	B	REPLACEMENT BRACKETS**	FW WEIGHT LBS [KG]
FW83Y600XL__	FW83-7804XL__	5.6"	8°	8°	RK-Y600	297.00 [134.72]
FW83Y700XL__	FW83-7803XL__	6.6"	11°	11°	RK-Y700	306.00 [138.80]
FW83Y800XL__	FW83-7802XL__	7.6"	14°	14°	RK-Y800	311.00 [141.07]
FW83Y900XL__	FW83-7801XL__	8.6"	17°	17°	RK-Y900	316.00 [143.34]

◊ For right-hand release fifth wheels, change "L" to "R" in part number.
*No Longer Available.
** See bracket section for more information.

NOTE: A flat or corrugated mounting plate is required for foot mount brackets.

FW83 Stationary Integrated Plate Mount

Discontinued - Replacement Parts Only



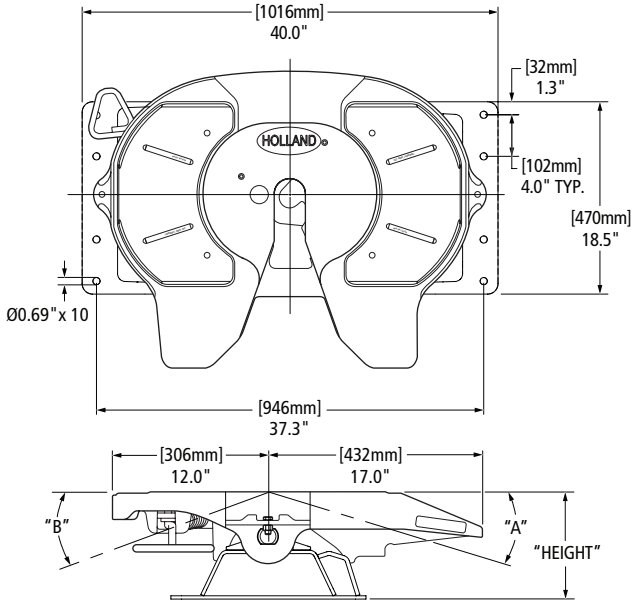

STANDARD OPTION CODES Replaces the Underscore (__) on the new and legacy part number.			
CODE	DESCRIPTION	CODE	DESCRIPTION
00 / Blank	Standard, No Other Options.	80	Air Release, OEM Replacement, Left-Hand Only
02	Manual Secondary Lock	86	Air Release, Aftermarket Installations, Left-Hand Only
14	Grease Fitting in Top Plate, Four (4) Fittings	48	Manual Secondary Lock, Drilled and Tapped for Auto Lube
24	Drilled and Tapped for Auto Lube		

FW PART NUMBER (CAST BRACKET)◊*	LEGACY FW PART NUMBER (FABRICATED BRACKET)◊*	HEIGHT	A	B	REPLACEMENT BRACKETS*	FW WEIGHT LBS [KG]
FW83Z600XL__	FW83-7886XL__	5.6"	8°	8°	RK-Z600	317.00 [143.79]
FW83Z700XL__	FW83-7885XL__	6.6"	11°	11°	RK-Z700	325.00 [147.42]
FW83Z800XL__	FW83-7884XL__	7.6"	14°	14°	RK-Z800	331.00 [150.14]
FW83Z900XL__	FW83-7883XL__	8.6"	17°	17°	RK-Z900	328.00 [148.78]

◊ For right-hand release fifth wheels, change "L" to "R" in part number.
* No Longer Available.
** See bracket section for more information.

XL-FW10081PM-en-US Rev D 2016-03-01 Amendments and errors reserved. © SAF-HOLLAND, Inc.

FW83 Stationary Brackets for Angle Mounting

Also Available With Angle Later In This Section.
Discontinued - Replacement Parts Only



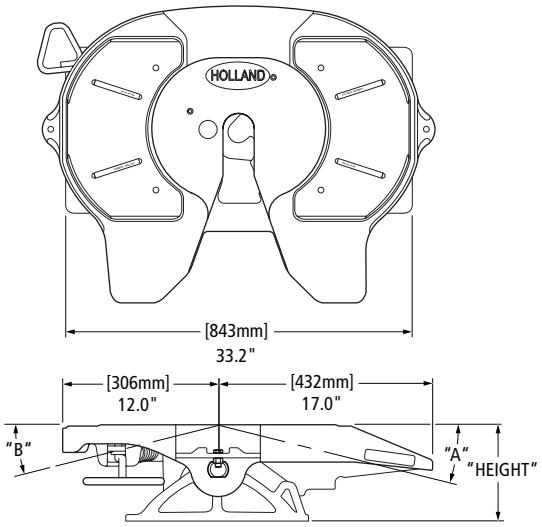

STANDARD OPTION CODES Replaces the Underscore (__) on the new and legacy part number.	
NUMBER CODE	**DESCRIPTION**
00 / Blank	Standard, No Other Options.
02	Manual Secondary Lock
80	Air Release, OEM Replacement, Left-Hand Only
86	Air Release, New Installations, Left-Hand Only

FW PART NUMBER (CAST BRACKET)◊*	LEGACY FW PART NUMBER (FABRICATED BRACKET)◊*	HEIGHT	A	B	REPLACEMENT BRACKETS**	FW WEIGHT LBS [KG]
FW83X600XL__	FW83-7824XL__	5.3"	8°	8°	RK-X600	261.00 [118.39]
FW83X700XL__	FW83-7823XL__	6.3"	11°	11°	RK-X700	264.00 [119.75]
FW83X800XL__	FW83-7822XL__	7.3"	14°	14°	RK-X800	264.00 [119.75]
FW83X900XL__	FW83-7821XL__	8.3"	17°	17°	RK-X900	275.00 [124.74]

◊ For right-hand release fifth wheels, change "L" to "R" in part number.
*No Longer Available.
** See bracket section for more information.

 Amendments and errors reserved. © SAF-HOLLAND, Inc.

FW83 Sliding ILS Outboard Mount

Discontinued - Replacement Parts Only



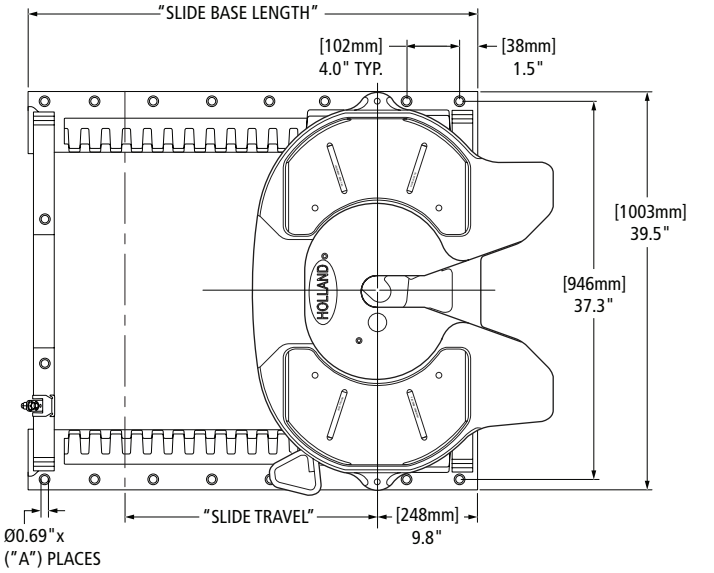

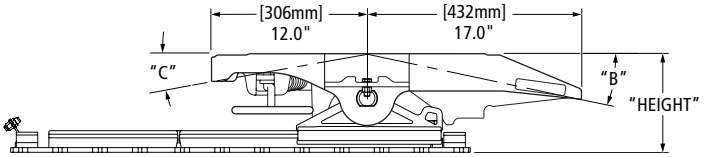

STANDARD OPTION CODES Replaces the Underscore (__) on the new and legacy part number.	
NUMBER CODE	DESCRIPTION
00 / Blank	Standard, No Other Options
02	Manual Secondary Lock
80	Air Release, OEM Replacement, Left-Hand Only
86	Air Release, New Installations, Left-Hand Only
OG	Plunger Dip Control

ILS FW PART NUMBER◊*	LEGACY		HEIGHT	SLIDE TRAVEL	SLIDE BASE LENGTH	A # OF HOLES	B	C	REPLACEMENT SLIDE BASE AND BRACKET**	REPLACEMENT SLIDE BASE**	REPLACEMENT BRACKET**	FW WEIGHT LBS [KG]
	TRADITIONAL PART NUMBER (AIR RELEASE)◊*	TRADITIONAL PART NUMBER (MANUAL RELEASE)◊*										
FW83A712XL__	FW83-8003T1L__	FW83-8013T1L__	6.7" [170]	12" [305]	31" [787]	16	8°	8°	XA-A712	XA-A12	RK-10689-1	418.00 [189.60]
FW83A724XL__	FW83-8003T3L__	FW83-8013T3L__		24" [610]	43" [1092]	22			XA-A724	XA-A24		451.00 [204.57]
FW83A736XL__	FW83-8003T4L__	FW83-8013T4L__		36" [914]	55" [1397]	28			XA-A736	XA-A36		485.00 [219.99]
FW83A748XL__	FW83-8003T5L__	FW83-8013T5L__		48" [1219]	67" [1702]	34			XA-A748	XA-A48		518.00 [234.96]
FW83A812XL__	FW83-8002T1L__	FW83-8012T1L__	7.7" [196]	12" [305]	31" [787]	16	12°	10°	XA-A812	XA-A12	RK-10689-2	423.00 [191.87]
FW83A824XL__	FW83-8002T3L__	FW83-8012T3L__		24" [610]	43" [1092]	22			XA-A824	XA-A24		456.00 [206.84]
FW83A836XL__	FW83-8002T4L__	FW83-8012T4L__		36" [914]	55" [1397]	28			XA-A836	XA-A36		490.00 [222.26]
FW83A848XL__	FW83-8002T5L__	FW83-8012T5L__		48" [1219]	67" [1702]	34			XA-A848	XA-A48		523.00 [237.23]
FW83A912XL__	FW83-8001T1L__	FW83-8011T1L__	8.7" [221]	12" [305]	31" [787]	16	15°	12°	XA-A912	XA-A12	RK-10689-3	426.00 [193.23]
FW83A924XL__	FW83-8001T3L__	FW83-8011T3L__		24" [610]	43" [1092]	22			XA-A924	XA-A24		460.00 [208.65]
FW83A936XL__	FW83-8001T4L__	FW83-8011T4L__		36" [914]	55" [1397]	28			XA-A936	XA-A36		494.00 [224.07]
FW83A948XL__	FW83-8001T5L__	FW83-8011T5L__		48" [1219]	67" [1702]	34			XA-A948	XA-A48		527.00 [239.04]

◊ For right-hand release fifth wheels, change "L" to "R" in part number.
* No longer available.
** See bracket section for more information.

XL-FW10081PM-en-US Rev D 2016-03-01 Amendments and errors reserved. © SAF-HOLLAND, Inc.

FW83 Sliding ILS Inboard Mount for Angle

Also Available With Angle Later In This Section.
Discontinued - Replacement Parts Only



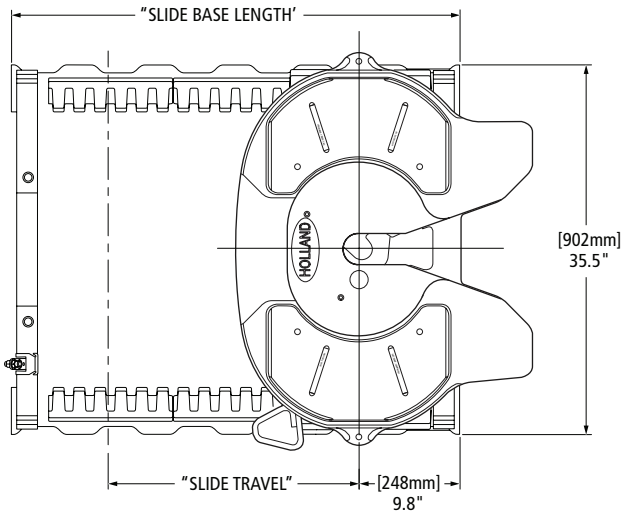

STANDARD OPTION CODES Replaces the Underscore (__) on the new and legacy part number.	
NUMBER CODE	DESCRIPTION
00 / Blank	Standard, No Other Options
02	Manual Secondary Lock
11	Weight Saver Cutout
80	Air Release, OEM Replacement, Left-Hand Only
86	Air Release, New Installations, Left-Hand Only
90	Air Release with Weight Saver Cutout
95	Air Release Aftermarket with Weight Saver Cutout

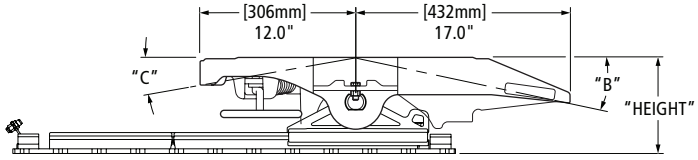

ILS FW PART NUMBER◊*	LEGACY		HEIGHT	SLIDE TRAVEL	SLIDE BASE LENGTH	B	C	REPLACEMENT SLIDE BASE AND BRACKET**	REPLACEMENT SLIDE BASE**	REPLACEMENT BRACKETS**	FW WEIGHT LBS [KG]
	TRADITIONAL PART NUMBER (AIR RELEASE)◊*	TRADITIONAL PART NUMBER (MANUAL RELEASE)◊*									
FW83B712XL__	FW83-7003X1L__	FW83-7013X1L__	6.6"	12" [305]	31" [787]	8°	8°	XA-B712X	XA-B12X	RK-10689-1	402.00 [182.34]
FW83B724XL__	FW83-7003X2L__	FW83-7013X2L__		24" [610]	43" [1092]			XA-B724X	XA-B24X		429.00 [194.59]
FW83B736XL__	FW83-7003X4L__	FW83-7013X4L__		36" [914]	55" [1397]			XA-B736X	XA-B36X		458.00 [207.75]
FW83B748XL__	FW83-7003X5L__	FW83-7013X5L__		48" [1219]	67" [1702]			XA-B748X	XA-B48X		485.00 [219.99]
FW83B812XL__	FW83-7002X1L__	FW83-7012X1L__	7.6"	12" [305]	31" [787]	12°	10°	XA-B812X	XA-B12X	RK-10689-2	406.00 [184.16]
FW83B824XL__	FW83-7002X2L__	FW83-7012X2L__		24" [610]	43" [1092]			XA-B824X	XA-B24X		434.00 [196.86]
FW83B836XL__	FW83-7002X4L__	FW83-7012X4L__		36" [914]	55" [1397]			XA-B836X	XA-B36X		462.00 [209.56]
FW83B848XL__	FW83-7002X5L__	FW83-7012X5L__		48" [1219]	67" [1702]			XA-B848X	XA-B48X		490.00 [222.26]
FW83B912XL__	FW83-7001X1L__	FW83-7011X1L__	8.6"	12" [305]	31" [787]	15°	12°	XA-B912X	XA-B12X	RK-10689-3	410.00 [185.97]
FW83B924XL__	FW83-7001X2L__	FW83-7011X2L__		24" [610]	43" [1092]			XA-B924X	XA-B24X		438.00 [198.67]
FW83B936XL__	FW83-7001X4L__	FW83-7011X4L__		36" [914]	55" [1397]			XA-B936X	XA-B36X		466.00 [211.37]
FW83B948XL__	FW83-7001X5L__	FW83-7011X5L__		48" [1219]	67" [1702]			XA-B948X	XA-B48X		494.00 [224.07]

◊ For right-hand release fifth wheels, change "L" to "R" in part number.
* No longer available.
** See bracket section for more information.

 Amendments and errors reserved. © SAF-HOLLAND, Inc.

SAF-HOLLAND Group

FW83 Sliding Traditional Outboard Mount

Discontinued - Replacement Parts Only

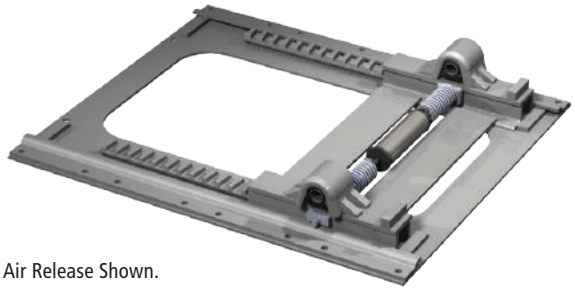

Air Release Shown.

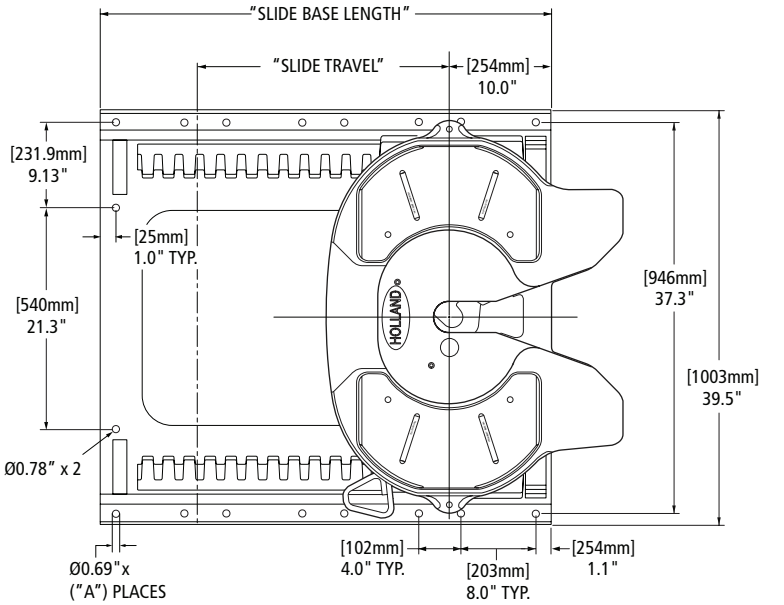

STANDARD OPTION CODES Replaces the Underscore (__) on the new and legacy part number.	
NUMBER CODE	**DESCRIPTION**
00 / Blank	Standard, No Other Options
02	Manual Secondary Lock
80	Air Release, OEM Replacement, Left-Hand Only
86	Air Release, New Installations, Left-Hand Only
OG	Plunger Dip Control

LEGACY FW PART NUMBER◊*	REPLACED BY ILS FW PART NUMBER◊*	SLIDE BRACKET TYPE	HEIGHT	SLIDE TRAVEL	SLIDE BASE LENGTH	A # OF HOLES	B	C	REPLACEMENT SLIDE BASE AND BRACKET**	REPLACEMENT SLIDE BASE**	REPLACEMENT BRACKETS**	FW WEIGHT LBS [KG]
FW83-8003T1L__	FW83A712XL__	Air Release	6.6"	10.7" [272]	42.2" [1072]	16	10°	10°	—	XA-07871-1L	XA-7003-1	486.00 [220.45]
FW83-8003T2L__	FW83A724XL__			16.8" [427]	50.2" [1275]	18			—	XA-07871-2L		508.00 [230.42]
FW83-8003T3L__	FW83A724XL__			24.5" [622]	55.2" [1402]	20			—	XA-07871-3L		534.00 [242.22]
FW83-8003T4L__	FW83A736XL__			41.3" [1049]	74.2" [1885]	26			—	XA-07871-4L		587.00 [266.26]
FW83-8002T1L__	FW83A812XL__		7.6"	12.2" [310]	34.2" [869]	12	12°†	10°	—	XA-07871-1	XA-7002	439.00 [199.13]
FW83-8002T2L__	FW83A824XL__			18.4" [467]	42.2" [1072]	16			—	XA-07871-2		453.00 [205.48]
FW83-8002T3L__	FW83A824XL__			24.5" [622]	46.2" [1173]	16			—	XA-07871-3		484.00 [219.54]
FW83-8002T4L__	FW83A836XL__			36.7" [932]	58.2" [1478]	20			—	XA-07871-4		517.00 [234.51]
FW83-8002T5L__	FW83A848XL__			48.9" [1242]	70.2" [1783]	24			—	XA-07871-5		557.00 [252.65]
FW83-8001T1L__	FW83A912XL__		8.6"	12.2" [310]	34.2" [869]	12	18°	15°	—	XA-07871-1	XA-7001	444.00 [201.40]
FW83-8001T2L__	FW83A924XL__			18.4" [467]	42.2" [1072]	16			—	XA-07871-2		458.00 [207.75]
FW83-8001T3L__	FW83A924XL__			24.5" [622]	46.2" [1173]	16			—	XA-07871-3		489.00 [221.81]
FW83-8001T4L__	FW83A936XL__			36.7" [932]	58.2" [1478]	20			—	XA-07871-4		522.00 [236.78]
FW83-8001T5L__	FW83A948XL__			48.9" [1242]	70.2" [1783]	24			—	XA-07871-5		562.00 [254.92]

◊ For right-hand release fifth wheels, change "L" to "R" in part number.
† If Option Code 47 Dimension Changes to 8°
* No longer available.
** See bracket section for more information.

XL-FW10081PM-en-US Rev D 2016-03-01 Amendments and errors reserved. © SAF-HOLLAND, Inc.

LEGACY FW PART NUMBER◊*	REPLACED BY ILS FW PART NUMBER◊*	SLIDE BRACKET TYPE	HEIGHT	SLIDE TRAVEL	SLIDE BASE LENGTH	A # OF HOLES	B	C	REPLACEMENT SLIDE BASE AND BRACKET**	REPLACEMENT SLIDE BASE**	REPLACEMENT BRACKETS**	FW WEIGHT LBS [KG]
FW83-8301T1L__	—	Air Release	8.1"	10.7" [272]	42.2" [1072]	16	15°	15°	XA-8311-T1	XA-07871-1L	XA-7301-1	497.00 [225.44]
FW83-8301T2L__	—			16.8" [427]	50.2" [1275]	18			XA-8311-T2	XA-07871-2L		519.00 [235.41]
FW83-8301T3L__	—			24.5" [622]	55.2" [1402]	20			XA-8311-T3	XA-07871-3L		545.00 [247.21]
FW83-8301T4L__	—			41.3" [1049]	74.2" [1885]	26			XA-8311-T4	XA-07871-4L		598.00 [271.25]
FW83-8012T1L__	FW83A812XL__	Manual Release	7.6"	12.2" [310]	34.2" [869]	12	12°	10°	—	XA-07871-1	XA-7012	443.00 [200.94]
FW83-8012T2L__	FW83A824XL__			18.4" [467]	42.2" [1072]	16			—	XA-07871-2		457.00 [207.29]
FW83-8012T3L__	FW83A824XL__			24.5" [622]	46.2" [1173]	16			—	XA-07871-3		488.00 [221.35]
FW83-8012T4L__	FW83A836XL__			36.7" [932]	58.2" [1478]	20			—	XA-07871-4		521.00 [236.32]
FW83-8012T5L__	FW83A848XL__			48.8"	70.2" [1783]	24			—	XA-07871-5		561.00 [254.47]

◊ For right-hand release fifth wheels, change "L" to "R" in part number.
† If Option Code 47 Dimension Changes to 8°
* No longer available.
** See bracket section for more information.

 Amendments and errors reserved. © SAF-HOLLAND, Inc.

FW83 Sliding Traditional Inboard for Angle Mount

Also Available With Angle Later In This Section.
Discontinued - Replacement Parts Only

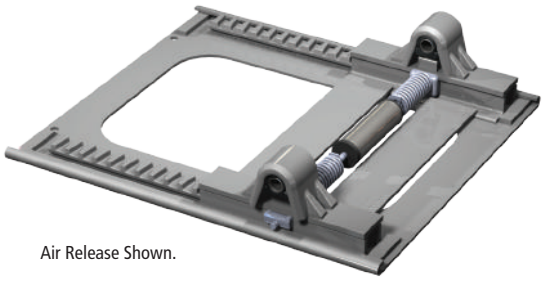

Air Release Shown.

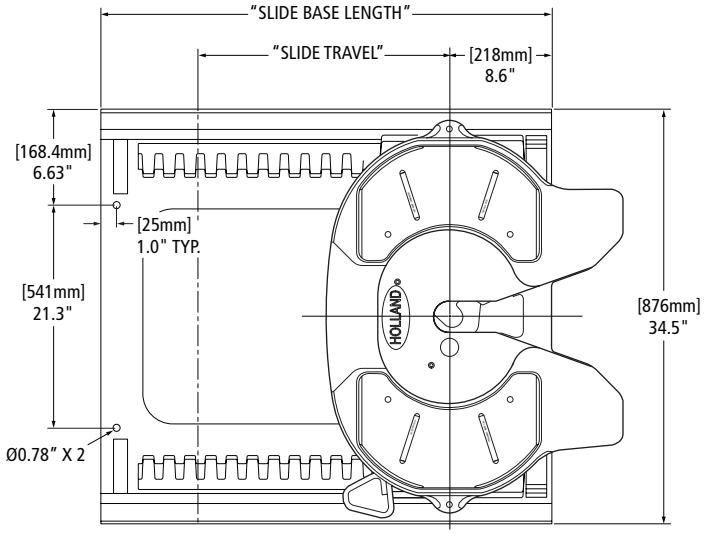

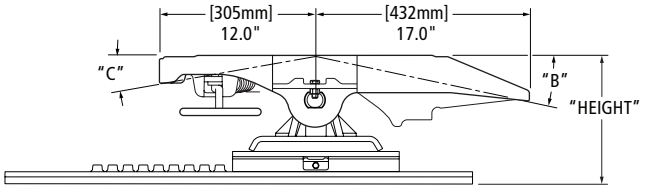

STANDARD OPTION CODES Replaces the Underscore (__) on the new and legacy part number.	
NUMBER CODE	**DESCRIPTION**
00 / Blank	Standard, No Other Options
02	Manual Secondary Lock
11	Weight Saver Cutout
80	Air Release, OEM Replacement, Left-Hand Only
86	Air Release, New Installations, Left-Hand Only
90	Air Release with Weight Saver Cutout
95	Air Release Aftermarket with Weight Saver Cutout

LEGACY FW PART NUMBER◊*	REPLACED BY ILS FW PART NUMBER◊*	SLIDE BRACKET TYPE	HEIGHT	SLIDE TRAVEL	SLIDE BASE LENGTH	B	C	REPLACEMENT SLIDE BASE AND BRACKET**	REPLACEMENT SLIDE BASE**	REPLACEMENT BRACKETS**	FW WEIGHT LBS [KG]
FW83-7003X1L__	FW83B712XL__	Air Release	6.6"	10.7" [272]	38.9" [988]	10°	10°	—	XA-0751-1	XA-7003-1	452.00 [205.02]
FW83-7003X2L__	FW83B724XL__			16.8" [427]	45.0" [1143]			—	XA-0751-2		466.00 [211.37]
FW83-7003X3L__	FW83B724XL__			24.5" [622]	52.6" [1336]			—	XA-0751-3A		486.00 [220.45]
FW83-7003X4L__	FW83B736XL__			41.3" [1049]	69.5" [1765]			—	XA-0751-4		517.00 [234.51]
FW83-7003X5L__	FW83B748XL__			53.6" [1361]	82.0" [2083]			—	XA-0751-5		577.00 [261.72]
FW83-7003X6L__	—			65.8" [1671]	94.0" [2388]			XA-7003-X6	XA-0751-6		633.00 [287.12]
FW83-7002X1L__	FW83B812XL__		7.6"	12.2" [310]	32.8" [833]	13°	10°	—	XA-0750-1	XA-7002	475.00 [215.46]
FW83-7002X2L__	FW83B824XL__			18.4" [467]	38.9" [988]			—	XA-0750-2		505.00 [229.06]
FW83-7002X3L__	FW83B824XL__			24.5" [622]	45.0" [1143]			—	XA-0750-3		527.00 [239.04]
FW83-7002X4L__	FW83B836XL__			36.7" [932]	57.2" [1453]			—	XA-0750-4		579.00 [262.63]
FW83-7002X5L__	FW83B848XL__			48.9" [1242]	69.5" [1765]			—	XA-0750-5		634.00 [287.58]
FW83-7002X6L__	—			61.2" [1554]	82.0" [2083]			XA-7002-X6	XA-0750-6		684.00 [310.26]

◊ For right-hand release fifth wheels, change "L" to "R" in part number.
* No longer available.
** See bracket section for more information.

XL-FW10081PM-en-US Rev D 2016-03-01 Amendments and errors reserved. © SAF-HOLLAND, Inc.

LEGACY FW PART NUMBER◊*	REPLACED BY ILS FW PART NUMBER◊*	SLIDE BRACKET TYPE	HEIGHT	SLIDE TRAVEL	SLIDE BASE LENGTH	B	C	REPLACEMENT SLIDE BASE AND BRACKET**	REPLACEMENT SLIDE BASE**	REPLACEMENT BRACKETS**	WEIGHT LBS [KG]
FW83-7001X1L__	FW83B912XL__	Air Release	8.6"	12.2" [310]	32.8" [833]	15°	15°	—	XA-0750-1	XA-7001	480.00 [217.72]
FW83-7001X2L__	FW83B924XL__			18.4" [467]	38.9" [988]			—	XA-0750-2		510.00 [231.33]
FW83-7001X3L__	FW83B924XL__			24.5" [622]	45.0" [1143]			—	XA-0750-3		532.00 [241.31]
FW83-7001X4L__	FW83B936XL__			36.7" [932]	57.2" [1453]			—	XA-0750-4		584.00 [264.90]
FW83-7001X5L__	FW83B948XL__			48.9" [1242]	69.5" [1765]			—	XA-0750-5		639.00 [289.85]
FW83-7001X6L__	—			61.2" [1554]	82.0" [2083]			XA-7001-X6	XA-0750-6		689.00 [312.53]
FW83-7301X1L__	—		8.1"	10.7" [272]	38.9" [988]	15°	15°	XA-7301-X1	XA-0751-1	XA-7301-1	453.00 [205.48]
FW83-7301X2L__	—			16.8" [427]	45.0" [1143]			XA-7301-X2	XA-0751-2		467.00 [211.83]
FW83-7301X3L__	—			24.5" [622]	52.6" [1336]			XA-7301-X3	XA-0751-3A		487.00 [220.90]
FW83-7301X4L__	—			41.3" [1049]	69.5" [1765]			XA-7301-X4	XA-0751-4		518.00 [234.96]
FW83-7301X5L__	—			53.6" [1361]	82.0" [2083]			XA-7301-X5	XA-0751-5		578.00 [262.18]
FW83-7301X6L__	—			65.8" [1671]	94.0" [2388]			XA-7301-X6	XA-0751-6		634.00 [287.58]
FW83-7013X1L__	FW83B712XL__	Manual Release	6.6"	10.7" [272]	38.9" [988]	10°	10°	—	XA-0751-1	XA-7013-1	444.00 [201.40]
FW83-7013X2L__	FW83B724XL__			16.8" [427]	45.0" [1143]			—	XA-0751-2		458.00 [207.75]
FW83-7013X3L__	FW83B724XL__			24.5" [622]	52.6" [1336]			—	XA-0751-3A		478.00 [216.82]
FW83-7013X4L__	FW83B736XL__			41.3" [1049]	69.5" [1765]			—	XA-0751-4		509.00 [230.88]
FW83-7013X5L__	FW83B748XL__			53.6" [1361]	82.0" [2083]			—	XA-0751-5		569.00 [258.09]
FW83-7013X6L__	—			65.8" [1671]	94.0" [2388]			XA-7013-X6	XA-0751-6		625.00 [283.50]
FW83-7012X1L__	FW83B812XL__		7.6"	12.2" [310]	32.8" [833]	13°	10°	—	XA-0750-1	XA-7012	461.00 [209.11]
FW83-7012X2L__	FW83B824XL__			18.4" [467]	38.9" [988]			—	XA-0750-2		491.00 [222.71]
FW83-7012X3L__	FW83B824XL__			24.5" [622]	45.0" [1143]			—	XA-0750-3		513.00 [232.69]
FW83-7012X4L__	FW83B836XL__			36.7" [932]	57.2" [1453]			—	XA-0750-4		565.00 [256.28]
FW83-7012X5L__	FW83B848XL__			48.9" [1242]	69.5" [1765]			—	XA-0750-5		620.00 [281.23]
FW83-7012X6L__	—			61.2" [1554]	82.0" [2083]			XA-7012-X6	XA-0750-6		670.00 [303.91]
FW83-7011X1L__	FW83B912XL__		8.6"	12.2" [310]	32.8" [833]	15°	15°	—	XA-0750-1	XA-7011	467.00 [211.83]
FW83-7011X2L__	FW83B924XL__			18.4" [467]	38.9" [988]			—	XA-0750-2		497.00 [225.44]
FW83-7011X3L__	FW83B924XL__			24.5" [622]	45.0" [1143]			—	XA-0750-3		519.00 [235.41]
FW83-7011X4L__	FW83B936XL__			36.7" [932]	57.2" [1453]			—	XA-0750-4		571.00 [259.00]
FW83-7011X5L__	FW83B948XL__			48.9" [1242]	69.5" [1765]			—	XA-0750-5		626.00 [283.95]
FW83-7011X6L__	—			61.2" [1554]	82.0" [2083]			XA-7011-X6	XA-0750-6		676.00 [306.63]
FW83-7311X1L__	—		8.1"	10.7" [272]	38.9" [988]	15°	15°	XA-7311-X1	XA-0751-1	XA-7311	453.00 [205.48]
FW83-7311X2L__	—			16.8" [427]	45.0" [1143]			XA-7311-X2	XA-0751-2		467.00 [211.83]
FW83-7311X3L__	—			24.5" [622]	52.6" [1336]			XA-7311-X3	XA-0751-3A		487.00 [220.90]
FW83-7311X4L__	—			41.3" [1049]	69.5" [1765]			XA-7311-X4	XA-0751-4		518.00 [234.96]
FW83-7311X5L__	—			53.6" [1361]	82.0" [2083]			XA-7311-X5	XA-0751-5		578.00 [262.18]
FW83-7311X6L__	—			65.8" [1671]	94.0" [2388]			XA-7311-X6	XA-0751-6		634.00 [287.58]

◊ For right-hand release fifth wheels, change "L" to "R" in part number.
* No longer available.
** See bracket section for more information.

 Amendments and errors reserved. © SAF-HOLLAND, Inc.

SAF-HOLLAND Group

FW83 Stationary Brackets with Angle Mount

Discontinued - Replacement Parts Only



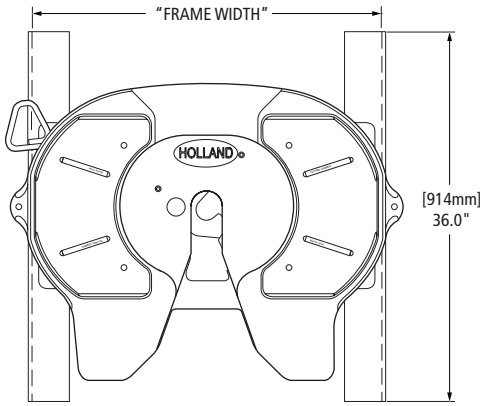

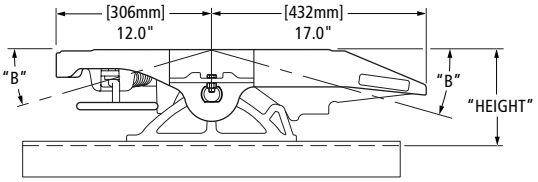

Frame width "A-G": .38" x 4" x 4" angle
"H-N": .38" x 4" x 6" angle
See option chart for other options.

STANDARD OPTION CODES Replaces the Underscore (__) on the new and legacy part number.	
NUMBER CODE	DESCRIPTION
00 / Blank	Standard, No Other Options
02	Manual Secondary Lock
21	.38" x 5" x 5" Angle
24	Drilled and Tapped for Auto Lube
51	.38" x 4" x 6" Angle
53	.38" x 4" x 4" x 44" Angle Centered
76	.38" x 5" x 5" x 44" Angle Centered
80	Air Release, OEM Replacement, Left-Hand Only
86	Air Release, New installations, Left-Hand Only
98	Manual Secondary Lock and .38" 5 x 5" x 44" Angle Centered

FW PART NUMBER CAST BRACKET◊*	FW PART NUMBER FABRICATED*◊	HEIGHT	B	REPLACEMENT BRACKETS**	FW WEIGHT LBS [KG]
FW83W600GL__	FW83-7814GL__	5.6"	8°	RK-W600-G	330.00 [149.69]
FW83W700GL__	FW83-7813GL__	6.6"	11°	RK-W700-G	338.00 [153.31]
FW83W800GL__	FW83-7812GL__	7.6"	14°	RK-W800-G	343.00 [155.58]
FW83W900GL__	FW83-7811GL__	8.6"	17°	RK-W900-G	347.00 [157.40]

◊ For right-hand release fifth wheels, change "L" to "R" in part number.
* No longer available.
** See bracket section for more information.

FRAME WIDTH CODE CHART					
CODE	FRAME WIDTH	CODE	FRAME WIDTH	CODE	FRAME WIDTH
A	33.25"	F	33.88"	L	34.50"
B	33.38"	**G†**	**34.00"**	M	34.62"
C	33.50"	H	34.12"	N	34.75"
D	33.62"	J	34.25"		
E	33.75"	K	34.38"		

† Standard

XL-FW10081PM-en-US Rev D 2016-03-01 Amendments and errors reserved. © SAF-HOLLAND, Inc.

FW83 Sliding ILS Inboard with Angle Mount

Discontinued - Replacement Parts Only

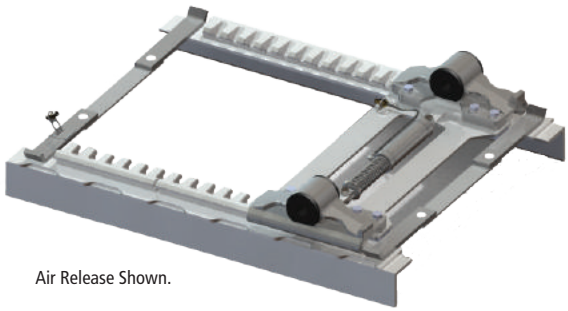

Air Release Shown.

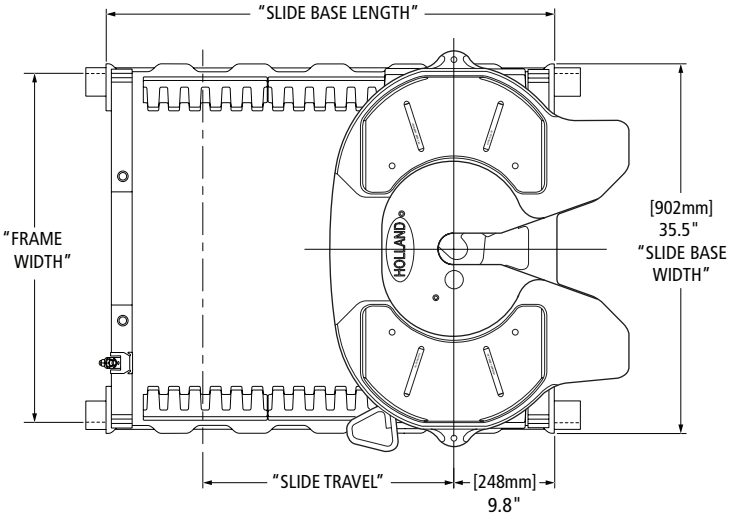

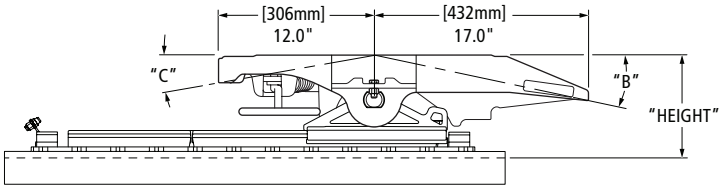

Frame width "A-C": .38" x 3" x 4" angle
"D-K": .38" x 3.5" x 4" angle
"K-Q": .38" x 4" x 4" angle

STANDARD OPTION CODES Replaces the Underscore (__) on the new and legacy part number.	
NUMBER CODE	DESCRIPTION
00 / Blank	Standard, No Other Option
02	Manual Secondary Lock
80	Air Release, OEM Replacement, Left-Hand Only

FRAME WIDTH CODE CHART					
CODE	FRAME WIDTH	CODE	FRAME WIDTH	CODE	FRAME WIDTH
A	33.25"	F	33.88"	L	34.50"
B	33.38"	**G†**	**34.00"**	M	34.62"
C	33.50"	H	34.12"	N	34.75"
D	33.62"	J	34.25"	P	34.88"
E	33.75"	K	34.38"	Q	35.00"

† Standard

FW PART NUMBER◊*	HEIGHT	SLIDE TRAVEL	SLIDE BASE LENGTH	B	C	REPLACEMENT SLIDE BASE AND BRACKET**	REPLACEMENT SLIDE BASE **	REPLACEMENT BRACKET**	FW WEIGHT LBS [KG]
FW83B712GL__	7.0"	12" [305]	31" [787]	8°	8°	XA-B712G	XA-B12G	RK-10689-1	453.00 [205.48]
FW83B724GL__		24" [610]	43" [1092]			XA-B724G	XA-B24G	RK-10689-1	499.00 [226.34]
FW83B736GL__		36" [914]	55" [1397]			XA-B736G	XA-B36G	RK-10689-1	546.00 [247.66]
FW83B748GL__		48" [1219]	67" [1702]			XA-B748G	XA-B48G	RK-10689-1	592.00 [268.53]
FW83B812GL__	8.0"	12" [305]	31" [787]	12°	10°	XA-B812G	XA-B12G	RK-10689-2	458.00 [207.75]
FW83B824GL__		24" [610]	43" [1092]			XA-B824G	XA-B24G	RK-10689-2	504.00 [228.61]
FW83B836GL__		36" [914]	55" [1397]			XA-B836G	XA-B36G	RK-10689-2	550.00 [249.48]
FW83B848GL__		48" [1219]	67" [1702]			XA-B848G	XA-B48G	RK-10689-2	596.00 [270.34]
FW83B912GL__	9.0"	12" [305]	31" [787]	15°	12°	XA-B912G	XA-B12G	RK-10689-3	462.00 [209.56]
FW83B924GL__		24" [610]	43" [1092]			XA-B924G	XA-B24G	RK-10689-3	508.00 [230.42]
FW83B936GL__		36" [914]	55" [1397]			XA-B936G	XA-B36G	RK-10689-3	554.00 [251.29]
FW83B948GL__		48" [1219]	67" [1702]			XA-B948G	XA-B48G	RK-10689-3	600.00 [272.16]

◊ For right-hand release fifth wheels, change "L" to "R" in part number.
* No longer available.
** See bracket section for more information.

 Amendments and errors reserved. © SAF-HOLLAND, Inc.

Discontinued - Replacement Parts Only

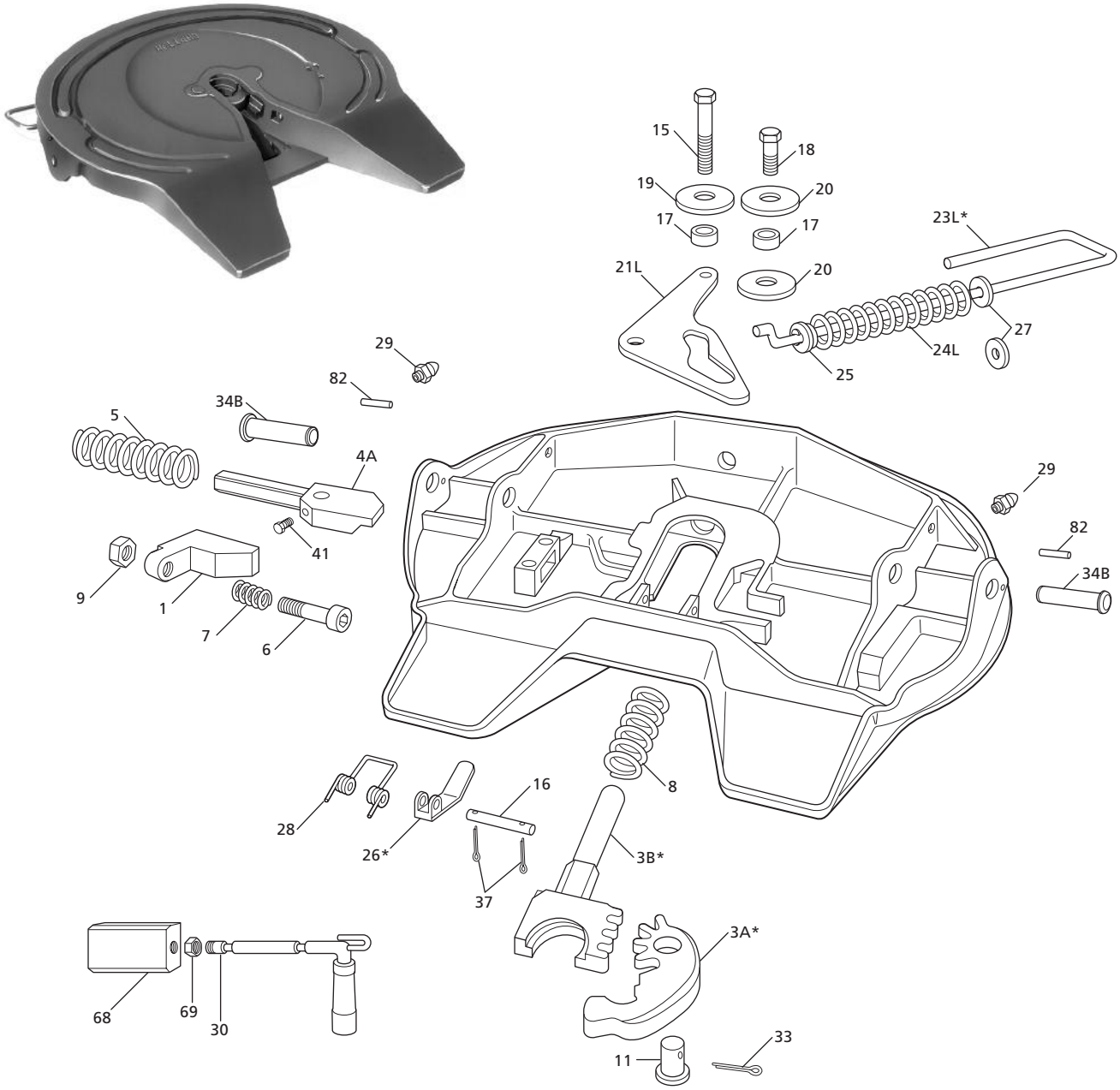

FOR RIGHT-HAND RELEASE MODELS

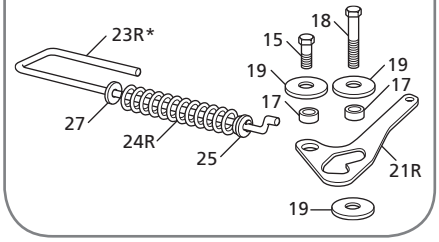

FOR MODELS WITH MANUAL SECONDARY LOCK

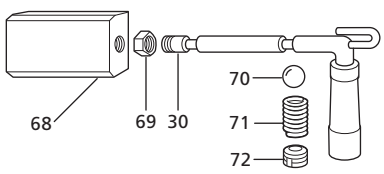

XL-FW10081PM-en-US Rev D 2016-03-01 Amendments and errors reserved. © SAF-HOLLAND, Inc.

FW2000 PARTS LIST				
ITEM	DESCRIPTION	PART NUMBER	QTY.	WEIGHT LBS [KG]
1	Wedge, Adjusting	XD-3123-1	1	1.18 [0.54]
3A*	Lock Jaw, Hinged, See RK-62004	XA-1102-A	1	N/A
3B*	Lock Jaw, Sliding, See RK-62004	XA-1103-B	1	N/A
4A	Plunger, Locking	XA-1119	1	3.75 [1.70]
5	Spring, Plunger	XB-1007	1	0.32 [0.15]
6	SHCS, .63"-11 x 4.00" Long	XB-09407	1	0.40 [0.18]
7	Spring, Manual Release	XB-403	1	0.07 [0.03]
8	Spring, Lock	XB-1006	1	0.21 [0.10]
9	Lock Nut, .63"-11	XB-09174	1	0.15 [0.07]
11	Pin, Lock	XA-1016	1	0.94 [0.43]
15	HHCS, .50"-20 x 1.75" Gr 5	XB-2083	1	0.13 [0.06]
16	Pin, .50" Dia. x 4.50" Long	XA-1055	1	0.24 [0.11]
17	Roller, .52" I.D. x 1" O.D. x .38" Long	XA-1029	2	0.06 [0.03]
18	HHCS, .50"-20 x 2.00"	XB-1031	1	0.10 [0.05]
19	Washer, .50" I.D. x 2.25" O.D., Left Hand Release	XB-1030	1	0.20 [0.09]
	Washer, .50" I.D. x 2.25" O.D., Right Hand Release		3	0.20 [0.09]
20	Washer, .50" I.D. x 2.63" O.D.	XB-02846	2	0.28 [0.13]
21L	Cam Plate, Left-Hand	XA-1118-2-L	1	2.60 [1.18]
21R	Cam Plate, Right-Hand	XA-1118-1	1	2.09 [0.95]
23L*	Release Handle, Left-Hand, See RK-1117-1-L	XA-1117-1-L	1	2.54 [1.15]
23R*	Release Handle, Left-Hand, See RK-1117-1	XA-1117-1	1	1.67 [0.76]
24L	Spring, Left-Hand, Manual Release	XB-03531	1	0.26 [0.12]
24R	Spring, Right-Hand, Manual Release	XB-1028	1	0.26 [0.12]
25	Washer, .53" I.D. x 1.06" O.D.	XB-PW-1732-1-116	1	0.02 [0.01]
26*	Lock Guard, See RK-05328	XA-1621	1	0.53 [0.24]
27	Washer, .56" I.D. x 1.38" O.D.	XB-T-49	2	0.04 [0.02]
28	Spring, Torsion	XB-1044	1	0.10 [0.05]
29	Fittings, Grease	XB-H-38	2	0.01 [0.005]
30	Release Arm, Manual Secondary Lock	XA-1674	1	2.73 [1.24]
33	Pin, Cotter, .25" Dia. x 2" Long	XB-5	1	0.05 [0.02]
34B	Pin, Bracket	XA-2016-P	2	2.00 [0.91]
37	Pin, Cotter, .13" Dia. x 1" Long	XB-16	2	0.01 [0.005]
41	Screw, Set, .38"-16 x .75" Long	XB-15	1	0.03 [0.01]
68	Safety Lock Block	XA-1668	1	5.60 [2.54]
69	Nut, Jam, .75"-16	XB-NRJ-34-F	1	0.09 [0.04]
70	Ball, .50" Dia. Steel	XB-V-919	1	0.02 [0.01]
71	Spring, Compression	XB-V-932	1	0.02 [0.01]
72	Screw, Set .63"-18	XB-V-1025	1	0.03 [0.01]
82	Pin, Spring, .38" Dia. x 1.75" Long	XB-21-S-375-1750	2	0.02 [0.01]

*Not sold individually - must be purchased in kit.

NOTE: See Accessories Section for No-Tilt Kits.

NOTE: Replacement top plates no longer available.

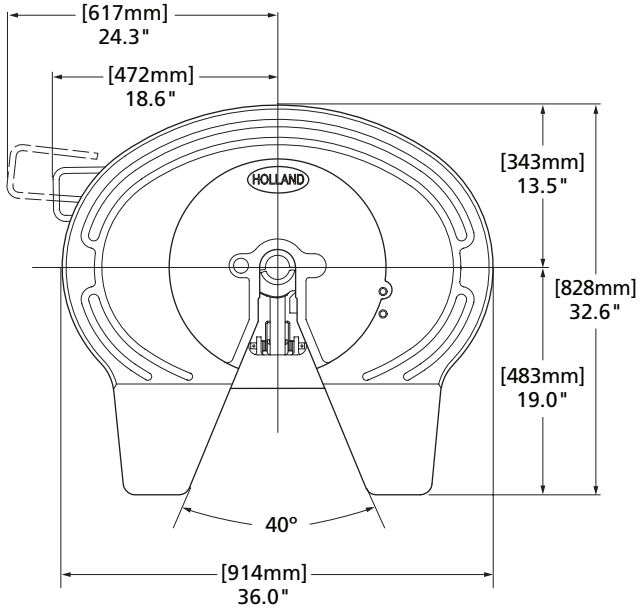

For XA-2009 fifth wheel rebuild procedures, see Holland publication XL-FW134-01 at www.safholland.us

 Amendments and errors reserved. © SAF-HOLLAND, Inc.

RK-05328
Lock Guard

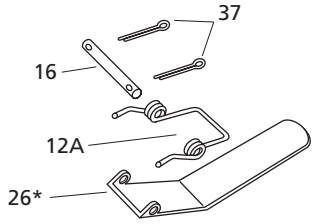

RK-62004
Lock

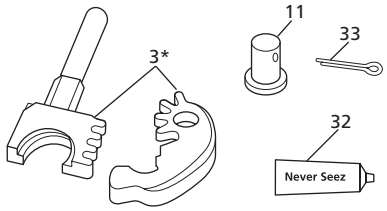

RK-1117-1-L
Handle Kit, Left-Hand

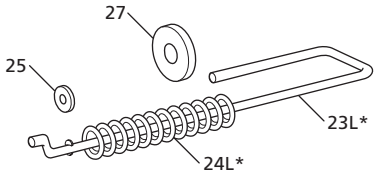

RK-1117-1
Handle Kit, Right-Hand

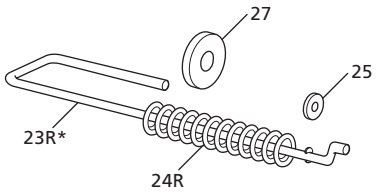

RK-04413
Bushing and Pin

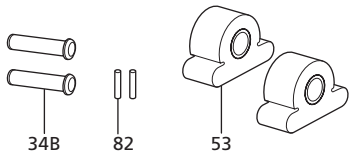

FW2000 KIT PARTS LIST

ITEM	DESCRIPTION	PART NUMBER	QTY.	WEIGHT LBS [KG]
3*	Set Lock	XA-1102	1	8.52 [3.86]
11	Pin, Lock	XA-1016	1	0.94 [0.43]
16	Pin, .50" Dia. x 4.50" Long	XA-1055	1	0.24 [0.11]
23L*	Release Handle, Left-Hand	XA-1117-1-L	1	2.54 [1.15]
23R*	Release Handle, Left-Hand	XA-1117-1	1	1.67 [0.76]
24L	Spring, Left-Hand, Manual Release	XB-03531	1	0.26 [0.12]
24R	Spring, Right-Hand, Manual Release	XB-1028	1	0.26 [0.12]
25	Washer, .53" I.D. x 1.06" O.D.	XB-PW-1732-1-116	1	0.02 [0.01]
26*	Lock Guard	XA-1621	1	0.53 [0.24]

FW2000 KIT PARTS LIST

ITEM	DESCRIPTION	PART NUMBER	QTY.	WEIGHT LBS [KG]
27	Washer, .56" I.D. x 1.38" O.D.	XB-T-49	1	0.04 [0.02]
28	Spring, Torsion	XB-1044	1	0.10 [0.05]
32	Never-Seez, 7.5g Tube	XB-02967	1	N/A
33	Pin, Cotter, .25" Dia. x 2" Long	XB-5	1	0.05 [0.02]
34B	Pin, Bracket	XA-2016-P	2	2.00 [0.91]
37	Pin, Cotter, .13" Dia. x 1" Long	XB-16	2	0.01 [0.005]
53	Cushion, Rubber	XB-0011-2	2	0.60 [0.27]
82	Pin, Spring, .38" Dia. x 1.75" Long	XB-21-S-375-1750	2	0.02 [0.01]

*Not sold individually - must be purchased in kit.

XL-FW10081PM-en-US Rev D 2016-03-01 Amendments and errors reserved. © SAF-HOLLAND, Inc.

RK-62001
Rebuild Kit, Left-Hand

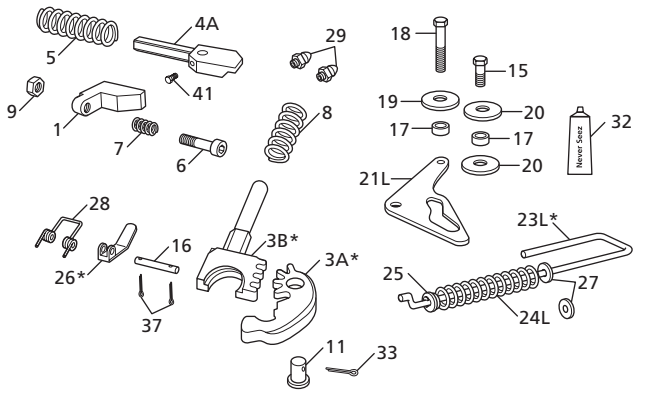

RK-62000
Rebuild Kit, Right-Hand

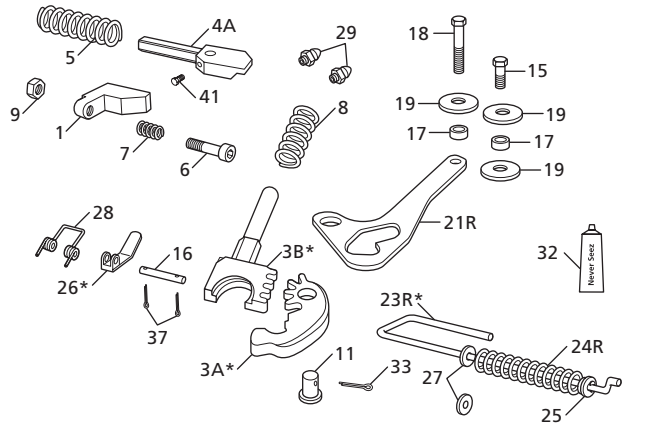

FW2000 KIT PARTS LIST

ITEM	DESCRIPTION	PART NUMBER	QTY.	WEIGHT LBS [KG]
1	Wedge, Adjusting	XD-3123-1	1	1.18 [0.54]
3A*	Lock Jaw Hinged, See RK-62004	XA-1102-A	1	N/A
3B*	Lock Jaw Sliding, See RK-62004	XA-1103-B	1	N/A
4A	Plunger, Locking	XA-1119	1	3.75 [1.70]
5	Spring, Plunger	XB-1007	1	0.32 [0.15]
6	SHCS, .63"-11 x 4.00" Long	XB-09407	1	0.40 [0.18]
7	Spring, Manual Release	XB-403	1	0.07 [0.03]
8	Spring, Lock	XB-1006	1	0.21 [0.10]
9	Nut, Lock, .63"-11	XB-09174	1	0.15 [0.07]
11	Pin, Lock	XA-1016	1	0.94 [0.43]
15	HHCS, .50"-20 x 1.75" Gr 5	XB-2083	1	0.13 [0.06]
16	Pin, .50" Dia. x 4.50" Long	XA-1055	1	0.24 [0.11]
17	Roller, .52" I.D. x 1" O.D. x .38" Long	XA-1029	2	0.06 [0.03]
18	HHCS, .50"-20 x 2.00" Long	XB-1031	1	0.10 [0.05]
19	Washer, .50" I.D. x 2.25" O.D.	XB-1030	1	0.20 [0.09]
20	Washer, .50" I.D. x 2.63" O.D.	XB-02846	2	0.28 [0.13]
21L	Cam Plate, Left-Hand	XA-1118-2-L	1	2.60 [1.18]

FW2000 KIT PARTS LIST

ITEM	DESCRIPTION	PART NUMBER	QTY.	WEIGHT LBS [KG]
21R	Cam Plate, Right-Hand	XA-1118-1	1	2.09 [0.95]
23L*	Release Handle, Left-Hand, See RK-1117-1-L	XA-1117-1-L	1	2.54 [1.15]
23R*	Release Handle, Left-Hand, See RK-1117-1	XA-1117-1	1	1.67 [0.76]
24L	Spring, Left Hand, Manual Release	XB-03531	1	0.26 [0.12]
24R	Spring, Right Hand Manual Release	XB-1028	1	0.26 [0.12]
25	Washer, .53" I.D. x 1.06" O.D.	XB-PW-1732-1-116	1	0.02 [0.01]
26*	Lock Guard, See RK-05328	XA-1621	1	0.53 [0.24]
27	Washer, .56" I.D. x 1.38" O.D.	XB-T-49	2	0.04 [0.02]
28	Spring, Torsion	XB-1044	1	0.10 [0.05]
29	Fittings, Grease	XB-H-38	2	0.01 [0.005]
32	Never-Seez, 7.5g Tube	XB-02967	1	N/A
33	Pin, Cotter, .25" Dia. x 2" Long	XB-5	1	0.05 [0.02]
37	Pin, Cotter, .13" Dia. x 1" Long	XB-16	2	0.01 [0.005]
41	Screw, Set, .38"-16 x .75" Long	XB-15	1	0.03 [0.01]

*Not sold individually - must be purchased in kit.

 Amendments and errors reserved. © SAF-HOLLAND, Inc.

RK-62013
Complete Rebuild, Left-Hand, Manual Secondary Lock

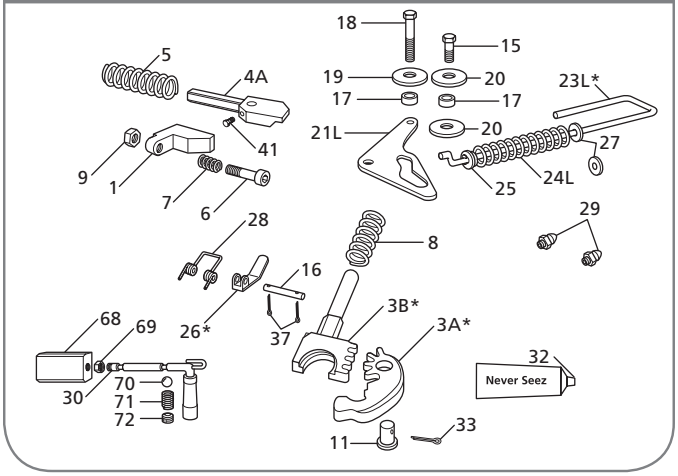

RK KIT COMPONENTS

ITEM	DESCRIPTION	PART NUMBER	QTY.	WEIGHT LBS [KG]
1	Wedge, Adjusting	XD-3123-1	1	1.18 [0.54]
3A*	Lock Jaw, Hinged, See RK-62004	XA-1102-A	1	N/A
3B*	Lock Jaw, Sliding, See RK-62004	XA-1103-B	1	N/A
4A	Plunger, Locking	XA-1119	1	3.75 [1.70]
5	Spring, Plunger	XB-1007	1	0.32 [0.15]
6	SHCS, .63"-11 x 4.00" Long	XB-09407	1	0.40 [0.18]
7	Spring, Manual Release	XB-403	1	0.07 [0.03]
8	Spring, Lock	XB-1006	1	0.21 [0.10]
9	Nut, Lock, .63"-11	XB-09174	1	0.15 [0.07]
11	Pin, Lock	XA-1016	1	0.94 [0.43]
15	HHCS, .50"-20 x 1.75" Gr 5	XB-2083	1	0.13 [0.06]
16	Pin, .50" Dia. x 4.50" Long	XA-1055	1	0.24 [0.11]
17	Roller, .52" I.D. x 1" O.D. x .38" Long	XA-1029	2	0.06 [0.03]
18	HHCS, .50"-20 x 2.00" Long	XB-1031	1	0.10 [0.05]
19	Washer, .50" I.D. x 2.25" O.D.	XB-1030	1	0.20 [0.09]
20	Washer, .50" I.D. x 2.63" O.D.	XB-02846	2	0.28 [0.13]
21L	Cam Plate, Left-Hand	XA-1118-2-L	1	2.60 [1.18]
23L*	Release Handle, Left-Hand, See RK-1117-1-L	XA-1117-1-L	1	2.54 [1.15]
24L	Spring, Left-Hand, Manual Release	XB-03531	1	0.26 [0.12]
25	Washer, .53" I.D. x 1.06" O.D.	XB-PW-1732-1-116	1	0.02 [0.01]
26*	Lock Guard, See RK-05328	XA-1621	1	0.53 [0.24]
27	Washer, .56" I.D. x 1.38" O.D.	XB-T-49	2	0.04 [0.02]
28	Spring, Torsion	XB-1044	1	0.10 [0.05]
29	Fittings, Grease	XB-H-38	2	0.01 [0.005]
30	Release Arm, Manual Secondary Lock	XA-1674	1	2.73 [1.24]
32	Never-Seez, 7.5g Tube	XB-02967	1	N/A
33	Pin, Cotter, .25" Dia. x 2" Long	XB-5	1	0.05 [0.02]

RK KIT COMPONENTS

ITEM	DESCRIPTION	PART NUMBER	QTY.	WEIGHT LBS [KG]
37	Pin, Cotter, .13" Dia. x 1" Long	XB-16	2	0.01 [0.005]
41	Screw, Set, .38"-16 x .75" Long	XB-15	1	0.03 [0.01]
68	Safety Lock Block	XA-1668	1	5.60 [2.54]
69	Nut, Jam, .75"-16	XB-NRJ-34-F	1	0.09 [0.04]
70	Ball, .50" Dia. Steel	XB-V-919	1	0.02 [0.01]
71	Spring, Compression	XB-V-932	1	0.02 [0.01]
72	Screw, Set .63"-18	XB-V-1025	1	0.03 [0.01]

*Not sold individually - must be purchased in kit.

XL-FW10081PM-en-US Rev D 2016-03-01 Amendments and errors reserved. © SAF-HOLLAND, Inc.

THIS PAGE INTENTIONALLY LEFT BLANK

 Amendments and errors reserved. © SAF-HOLLAND, Inc.

SAF-HOLLAND Group

Traditional Style Stationary Fifth Wheel Assembly Part Numbers

FRAME WIDTH			
LETTER	WIDTH	LETTER	WIDTH
X	No Angle	F	33.88"
A	33.25"	G	34.00"
B	33.38"	H	34.12"
C	33.50"	J	34.25"
D	33.62"	K	34.38"
E	33.75"	L	34.50"

RELEASE HANDLE	
NO.	DESCRIPTION
L	Left-hand (Road-side)
R	Right-hand (Curb-side)

General Holland prefix indicating complete fifth wheel assembly

SERIES	
2000	FW2000 Series

FW 2000 XXXX X X X XX

MOUNTING STYLE			
NO.	HEIGHT	NO.	HEIGHT
Foot Mount		*Bracket with Angle*	
7801	8.7"	7811	8.7"
7802	7.7"	7812	7.7"
7803	6.7"	7813	6.7"
7804	5.7"	7814	5.7"
Integrated Plate		*Bracket for Angle*	
7883	8.6"	7821	8.3"
8774	7.6"	7822	7.3"
7885	6.6"	7823	6.3"
7886	5.6"	7824	5.3"

SLIDE TRAVEL	
NO.	DESCRIPTION
1	12.2"
2	18.4"
3	24.5"
4	36.7"
5	48.9"

OPTION CODE*	
NO.	DESCRIPTION
BLANK	No option
02	Manual Secondary Lock
24	Drilled & Tapped for Auto Lube
Other Options Available	

Traditional Style Sliding Fifth Wheel Assembly Part Numbers

FRAME WIDTH			
LETTER	WIDTH	LETTER	WIDTH
X	No Angle	G	34.00"
A	33.25"	H	34.12"
B	33.38"	J	34.25"
C	33.50"	K	34.38"
D	33.62"	L	34.50"
E	33.75"	*Outboard*	
F	33.88"	T	Angles not Included

RELEASE HANDLE	
NO.	DESCRIPTION
L	Left-hand (Road-side)
R	Right-hand (Curb-side)

General Holland prefix indicating complete fifth wheel assembly

SERIES	
2000	FW2000 Series

FW 2000 XXXX X X X XX

MOUNTING STYLE			
NO.	HEIGHT	NO.	HEIGHT
Over the Frame		*Outboard*	
7001	8.63"	8001	8.63"
7002	7.63"	8002	7.63"
7003	6.63"	8003	6.63"

SLIDE TRAVEL	
NO.	DESCRIPTION
1	12.2"
2	18.4"
3	24.5"
4	36.7"
5	48.9"

OPTION CODE*	
NO.	DESCRIPTION
BLANK	No option
02	Manual Secondary Lock
24	Drilled & Tapped for Auto Lube
Other Options Available	

XL-FW10081PM-en-US Rev D 2016-03-01 Amendments and errors reserved. © SAF-HOLLAND, Inc.

FW2000 Stationary Foot Mount

Discontinued - Replacement Parts Only



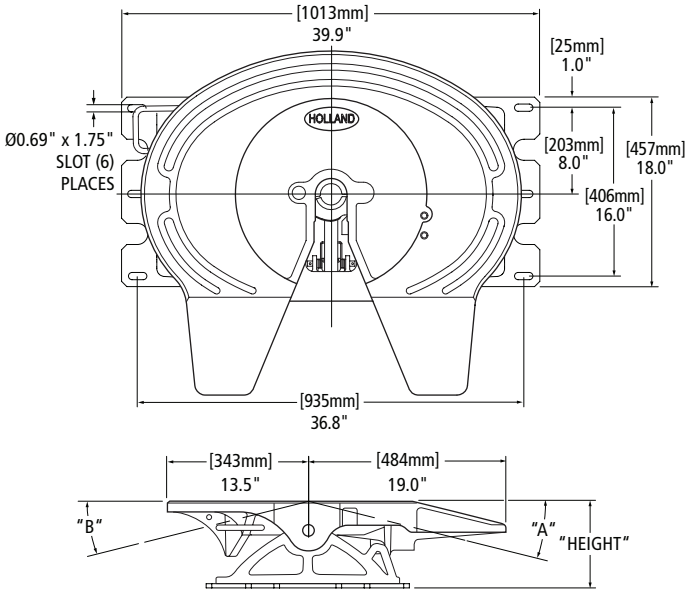

STANDARD OPTION CODES Replaces the Underscore (__) on the legacy part number.			
CODE	DESCRIPTION	CODE	DESCRIPTION
Blank	Standard, No Other Options.	02	Manual Secondary Lock
01	Mounting Plate*	04	Mounting Plate and Manual Seconday Release Lock

* Corrugated Plate Option adds 0.9" to height.

LEGACY FW PART NUMBER (FABRICATED BRACKET)*◊	HEIGHT	A	B	REPLACEMENT BRACKETS**	FW WEIGHT LBS [KG]
FW2000-7804XL__	5.6"	8°	8°	RK-Y600	300.00 [136.08]
FW2000-7803XL__	6.6"	11°	11°	RK-Y700	306.00 [138.80]
FW2000-7802XL__	7.6"	14°	14°	RK-Y800	310.00 [140.61]
FW2000-7801XL__	8.6"	17°	17°	RK-Y900	316.00 [143.34]

◊ For right-hand release fifth wheels, change "L" to "R" in part number.
*No Longer Available.
** See bracket section for more information.

NOTE: A flat or corrugated mounting plate is required for foot mount brackets.

FW2000 Stationary Integrated Plate Mount

Discontinued - Replacement Parts Only



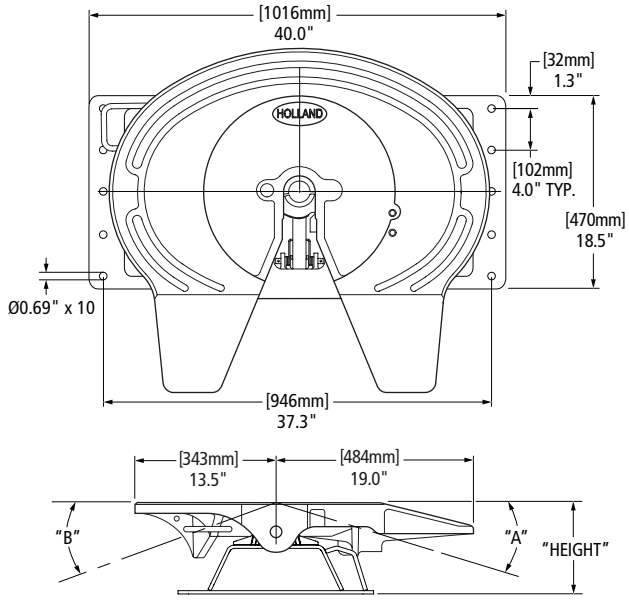

STANDARD OPTION CODES Replaces the Underscore (__) on the legacy part number.			
CODE	DESCRIPTION	CODE	DESCRIPTION
00 / Blank	Standard, No Other Options.	02	Manual Secondary Lock

LEGACY FW PART NUMBER (FABRICATED BRACKET)*◊	HEIGHT	A	B	REPLACEMENT BRACKETS**	FW WEIGHT LBS [KG]
FW2000-7886XL__	5.6"	8°	8°	RK-Z600	316.00 [143.34]
FW2000-7885XL__	6.6"	11°	11°	RK-Z700	324.00 [146.96]
FW2000-7884XL__	7.6"	14°	14°	RK-Z800	331.00 [150.14]
FW2000-7883XL__	8.6"	17°	17°	RK-Z900	327.00 [148.32]

◊ For right-hand release fifth wheels, change "L" to "R" in part number.
* No Longer Available
** See bracket section for more information.

 Amendments and errors reserved. © SAF-HOLLAND, Inc.

SAF-HOLLAND Group

FW2000 Stationary Brackets for Angle Mounting

Also Available With Angle Later In This Section.
Discontinued - Replacement Parts Only



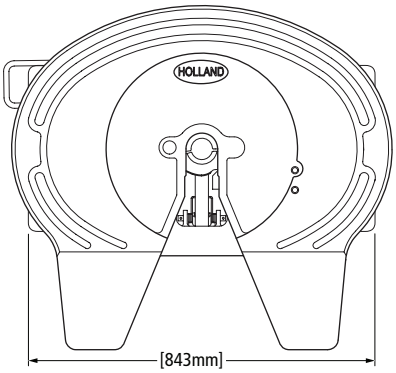

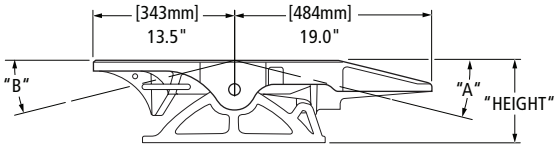

STANDARD OPTION CODES Replaces the Underscore (__) on the legacy part number.	
NUMBER CODE	DESCRIPTION
Blank	Standard, No Other Options.
02	Manual Secondary Lock

LEGACY FW PART NUMBER (FABRICATED BRACKET)*◊	HEIGHT	A	B	REPLACEMENT BRACKETS**	FW WEIGHT LBS [KG]
FW2000-7824XL__	5.6"	8°	8°	RK-X600	270.00 [122.47]
FW2000-7823XL__	6.6"	11°	11°	RK-X700	276.00 [125.19]
FW2000-7822XL__	7.6"	14°	14°	RK-X800	281.00 [127.46]
FW2000-7821XL__	8.6"	17°	17°	RK-X900	286.00 [129.73]

◊ For right-hand release fifth wheels, change "L" to "R" in part number.
*No Longer Available.
** See bracket section for more information.

FW2000 Stationary No Tilt Outboard for Angle Mount

Also Available With Angle Later In This Section.
Discontinued - Replacement Parts Only



Outboard

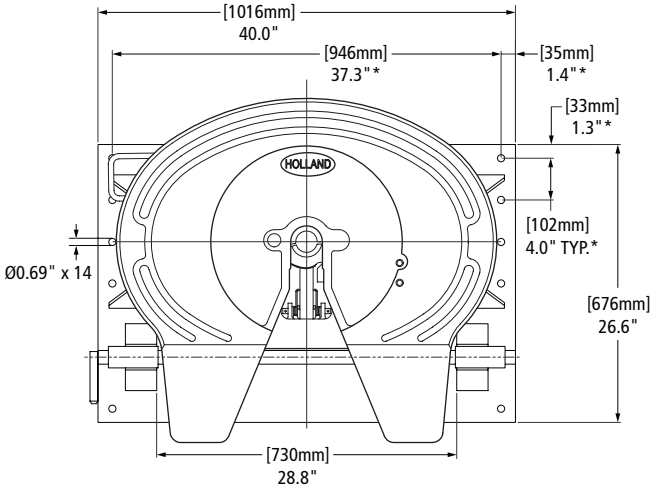

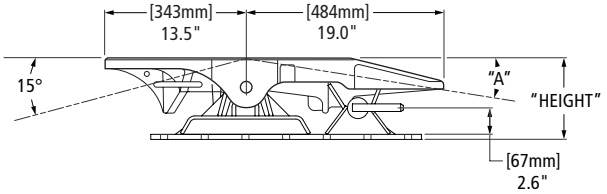

* Outboard only dimensions

STANDARD OPTION CODES Replaces the Underscore (__) on the legacy part number.	
NUMBER CODE	DESCRIPTION
06	No-Tilt
34	Manual Secondary Lock and No-Tilt

OUTBOARD FW PART NUMBER◊	HEIGHT	A	REPLACEMENT BRACKETS**	FW WEIGHT LBS [KG]
FW2000-8984XL__	7.8" [198]	9°	XA-8984	490.00 [222.26]
FW2000-8983XL__	8.8" [224]	14°	XA-8983	490.00 [222.26]

** See bracket section for more information.
◊ For right-hand release fifth wheels, change "L" to "R" in part number.

NOTE: See Accessories Section for No-Tilt Kits. Not included in Replacement Bracket part number.

XL-FW10081PM-en-US Rev D 2016-03-01 Amendments and errors reserved. © SAF-HOLLAND, Inc.

FW2000 Stationary No Tilt Inboard for Angle Mount

Also Available With Angle Later In This Section.
Discontinued - Replacement Parts Only



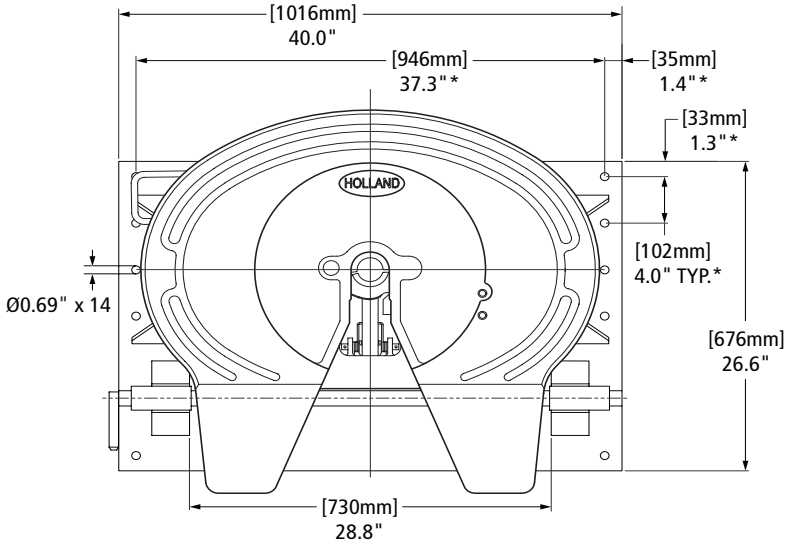

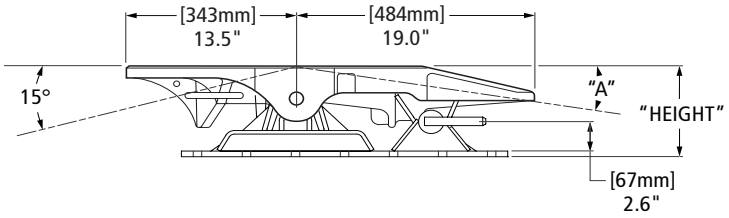

* Outboard only dimensions

STANDARD OPTION CODES Replaces the Underscore (__) on the legacy part number.	
NUMBER CODE	DESCRIPTION
06	No-Tilt
34	Manual Secondary Lock and No-Tilt

INBOARD FW PART NUMBER◊	HEIGHT	A	REPLACEMENT BRACKETS**	FW WEIGHT LBS [KG]
FW2000-8922XL06	7.7" [196]	9°	XA-8922	453.00 [205.48]

** See bracket section for more information.
◊ For right-hand release fifth wheels, change "L" to "R" in part number.

NOTE: See Accessories Section for No-Tilt Kits. Not included in Replacement Bracket part number.

 Amendments and errors reserved. © SAF-HOLLAND, Inc.

SAF-HOLLAND Group

FW2500 Sliding Traditional Outboard Mount

Discontinued - Replacement Parts Only

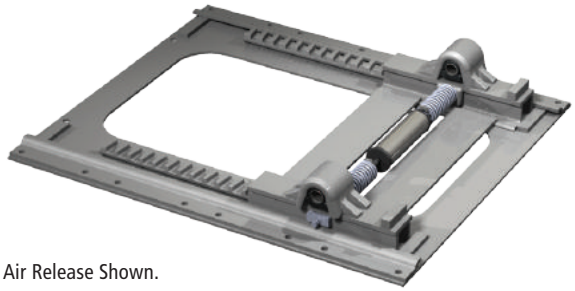

Air Release Shown.

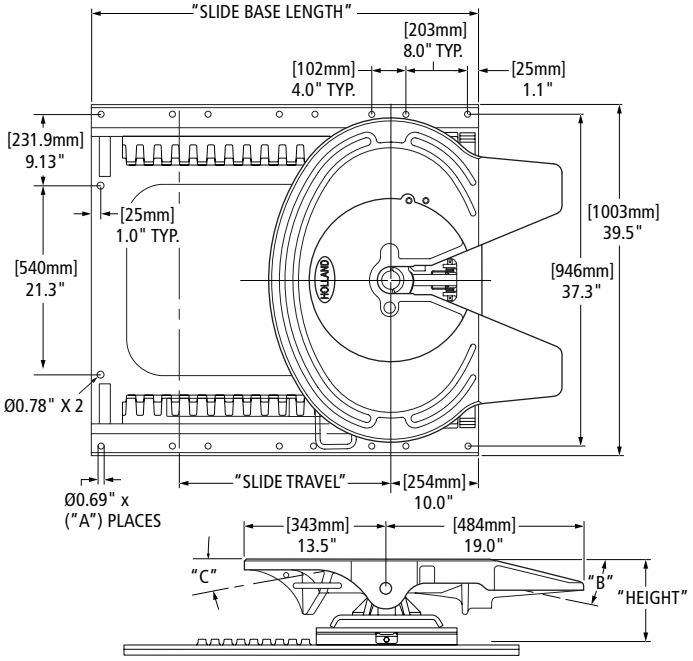

STANDARD OPTION CODES Replaces the Underscore (__) on the legacy part number.	
NUMBER CODE	**DESCRIPTION**
Blank	Standard, No Other Options
02	Manual Secondary Lock
47	Tilt Stops

LEGACY FW PART NUMBER*◊	SLIDE BRACKET TYPE	HEIGHT	SLIDE TRAVEL	SLIDE BASE LENGTH	A # OF HOLES	B	C	REPLACEMENT SLIDE BASE**	REPLACEMENT BRACKETS**	FW WEIGHT LBS [KG]
FW2500-8003T1L__	Air Release	6.7" [170]	10.7" [272]	42.2" [1072]	16	11°†	5°	XA-07871-1L	XA-7003	503.00 [228.16]
FW2500-8003T2L__			16.8" [427]	50.2" [1275]	18			XA-07871-2L		526.00 [238.59]
FW2500-8003T3L__			24.5" [622]	55.2" [1402]	20			XA-07871-3L		546.00 [247.66]
FW2500-8003T4L__			41.3" [1049]	74.2" [1885]	26			XA-07871-4L		606.00 [274.88]
FW2500-8002T1L__		7.7" [196]	12.2" [310]	34.2" [869]	12	11°	19°	XA-07871-1	XA-7002	452.00 [205.02]
FW2500-8002T2L__			18.4" [467]	42.2" [1072]	16			XA-07871-2		478.00 [216.82]
FW2500-8002T3L__			24.5" [622]	46.2" [1173]	16			XA-07871-3		492.00 [223.17]
FW2500-8002T4L__			36.7" [932]	58.2" [1478]	20			XA-07871-4		532.00 [241.31]
FW2500-8002T5L__			48.9" [1242]	70.2" [1783]	24			XA-07871-5		572.00 [259.45]

◊ For right-hand release fifth wheels, change "L" to "R" in part number.
† If Option Code 47 Dimension Changes to 8°
* No longer available.
** See bracket section for more information.

XL-FW10081PM-en-US Rev D 2016-03-01 Amendments and errors reserved. © SAF-HOLLAND, Inc.

LEGACY FW PART NUMBER *◊	SLIDE BRACKET TYPE	HEIGHT	SLIDE TRAVEL	SLIDE BASE LENGTH	A # OF HOLES	B	C	REPLACEMENT SLIDE BASE**	REPLACEMENT BRACKETS**	FW WEIGHT LBS [KG]
FW2500-8001T1L__	Air Release	8.7" [221]	12.2" [310]	34.2" [869]	12	17°	19°	XA-07871-1	XA-7001	457.00 [207.29]
FW2500-8001T2L__			18.4" [467]	42.2" [1072]	16			XA-07871-2		483.00 [219.09]
FW2500-8001T3L__			24.5" [622]	46.2" [1173]	16			XA-07871-3		497.00 [225.44]
FW2500-8001T4L__			36.7" [932]	58.2" [1478]	20			XA-07871-4		537.00 [243.58]
FW2500-8001T5L__			48.9" [1242]	70.2" [1783]	24			XA-07871-5		577.00 [261.72]
FW2500-8301T1L__		8.2" [208]	10.7" [272]	42.2" [1072]	16	16°	15°	XA-07871-1L	XA-7301	509.00 [230.88]
FW2500-8301T2L__			16.8" [427]	50.2" [1275]	18			XA-07871-2L		532.00 [241.31]
FW2500-8301T3L__			24.5" [622]	55.2" [1402]	20			XA-07871-3L		552.00 [250.38]
FW2500-8301T4L__			41.3" [1049]	74.2" [1885]	26			XA-07871-4L		612.00 [277.60]
FW2500-8009T2L__		10.2"	13.8" [351]	42.2" [1072]	16	21°	22°	XA-07871-2	XA-7009	515.00 [233.60]
FW2500-8009T3L__			19.9" [505]	46.2" [1173]	16			XA-07871-3		528.00 [239.50]
FW2500-8009T4L__			32.1" [815]	58.2" [1478]	20			XA-07871-4		568.00 [257.64]
FW2500-8009T5L__			44.4" [1128]	70.2" [1783]	24			XA-07871-5		609.00 [276.24]
FW2500-8013T1L__	Manual Release	6.7" [170]	10.7" [272]	42.2" [1072]	16	11°†	5°	XA-07871-1L	XA-7013	464.00 [210.47]
FW2500-8013T2L__			16.8" [427]	50.2" [1275]	18			XA-07871-2L		490.00 [222.26]
FW2500-8013T3L__			24.5" [622]	55.2" [1402]	20			XA-07871-3L		536.00 [243.13]
FW2500-8013T4L__			41.3" [1049]	74.2" [1885]	26			XA-07871-4L		544.00 [246.75]
FW2500-8012T1L__		7.7" [196]	12.2" [310]	34.2" [869]	12	11°	11°	XA-07871-1	XA-7012	451.00 [204.57]
FW2500-8012T2L__			18.4" [467]	42.2" [1072]	16			XA-07871-2		477.00 [216.36]
FW2500-8012T3L__			24.5" [622]	46.2" [1173]	16			XA-07871-3		491.00 [222.71]
FW2500-8012T4L__			58.2" [1478]	36.7" [932]	20			XA-07871-4		531.00 [240.86]
FW2500-8012T5L__			48.8"	70.2" [1783]	24			XA-07871-5		571.00 [259.00]
FW2500-8011T1L__		8.7" [221]	12.2" [310]	34.2" [869]	12	17°	19°	XA-07871-1	XA-7011	457.00 [207.29]
FW2500-8011T2L__			18.4" [467]	42.2" [1072]	16			XA-07871-2		483.00 [219.09]
FW2500-8011T3L__			46.2" [1173]	24.5" [622]	16			XA-07871-3		497.00 [225.44]
FW2500-8011T4L__			36.7" [932]	58.2" [1478]	20			XA-07871-4		537.00 [243.58]
FW2500-8011T5L__			48.9" [1242]	70.2" [1783]	24			XA-07871-5		577.00 [261.72]
FW2500-8311T1L__		8.2" [208]	10.7" [272]	42.2" [1072]	16	16°	13°	XA-07871-1L	XA-7311	502.00 [227.70]
FW2500-8311T2L__			16.8" [427]	50.2" [1275]	18			XA-07871-2L		524.00 [237.68]
FW2500-8311T3L__			24.5" [622]	55.2" [1402]	20			XA-07871-3L		544.00 [246.75]
FW2500-8311T4L__			41.3" [1049]	74.2" [1885]	26			XA-07871-4L		604.00 [273.97]
FW2500-8019T2L__		10.2"	13.8" [351]	42.2" [1072]	16	21°	21°	XA-07871-2	XA-7019	514.00 [233.15]
FW2500-8019T3L__			19.9" [505]	46.2" [1173]	16			XA-07871-3		528.00 [239.50]
FW2500-8019T4L__			32.1" [815]	58.2" [1478]	20			XA-07871-4		568.00 [257.64]
FW2500-8019T5L__			44.4" [1128]	70.2" [1783]	24			XA-07871-5		608.00 [275.78]

◊ For right-hand release fifth wheels, change "L" to "R" in part number.
† If Option Code 47 Dimension Changes to 8°
* No longer available.
** See bracket section for more information.

 Amendments and errors reserved. © SAF-HOLLAND, Inc.

FW2500 Sliding Traditional Inboard for Angle Mount

Also Available With Angle Later In This Section.
Discontinued - Replacement Parts Only

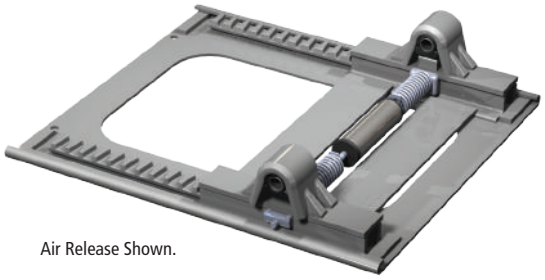

Air Release Shown.

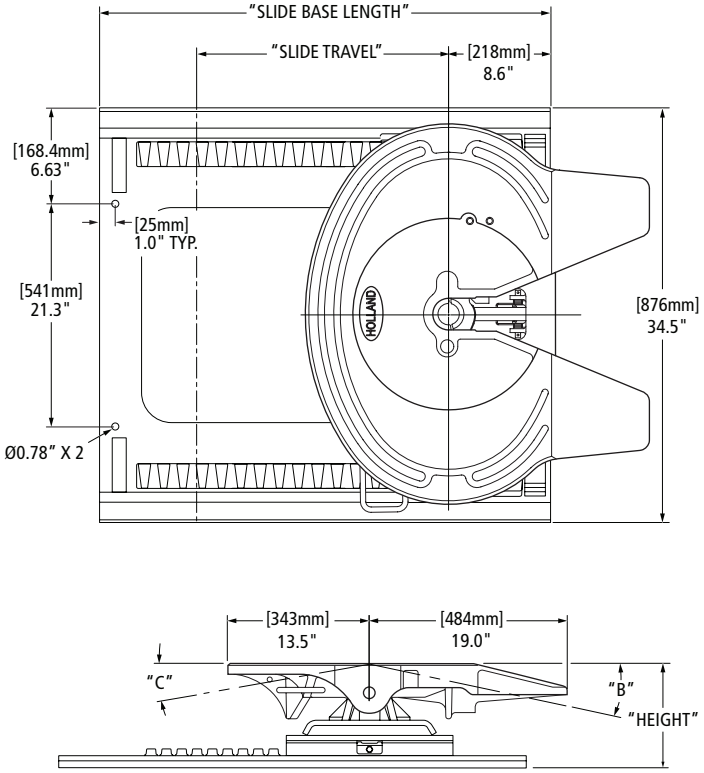

STANDARD OPTION CODES Replaces the Underscore (__) on the legacy part number.	
NUMBER CODE	**DESCRIPTION**
Blank	Standard, No Other Options
02	Manual Secondary Lock
11	Weight Saver Cutout
14	Grease Fittings in Top Plate, Four (4) Fittings
24	Drilled and Tapped for Auto Lube
28	Dolly Handle
30	Manual Secondary Lock and Weight Saver Cutout
55	Weight Saver Cutout and Drilled and Tapped for Auto Lube
80	Air Release, OEM Replacement, Left-Hand Only
86	Air Release, Aftermarket Installations, Air Control Modules Included, Left-Hand Only
88	Manual Secondary Release Lock, Weight Saver Cutout and Air Release, OEM Replacement, Left-Hand Only
90	Weight Saver Cutout and Air Release, OEM Replacement, Left-Hand Only
95	Weight Saver Cutout and Air Release, Aftermarket Installations, Air Control Modules Included, Left-Hand Only
96	Lincoln Lube System and Weight Saver Cutout
0C	Earless Top Plate

LEGACY FW PART NUMBER*◊	SLIDE BRACKET TYPE	HEIGHT	SLIDE TRAVEL	SLIDE BASE LENGTH	B	C	REPLACEMENT SLIDE BASE**	REPLACEMENT BRACKETS**	FW WEIGHT LBS [KG]
FW2500-7003X1L__	Air Release	6.7" [170]	10.7" [272]	38.9" [988]	11°	7°	XA-0751-1	XA-7003	464.00 [210.47]
FW2500-7003X2L__			16.8" [427]	45.0" [1143]			XA-0751-2		477.00 [216.36]
FW2500-7003X3L__			24.5" [622]	52.6" [1336]			XA-0751-3A		496.00 [224.98]
FW2500-7003X4L__			41.3" [1049]	69.5" [1765]			XA-0751-4		539.00 [244.49]
FW2500-7003X5L__			53.6" [1361]	82.0" [2083]			XA-0751-5		571.00 [259.00]
FW2500-7003X6L__			65.8" [1671]	94.0" [2388]			XA-0751-6		602.00 [273.06]
FW2500-7002X1L__		7.7" [196]	12.2" [310]	32.8" [833]	14°	19°	XA-0750-1	XA-7002	456.00 [206.84]
FW2500-7002X2L__			18.4" [467]	38.9" [988]			XA-0750-2		484.00 [219.54]
FW2500-7002X3L__			24.5" [622]	45.0" [1143]			XA-0750-3		509.00 [230.88]
FW2500-7002X4L__			36.7" [932]	57.2" [1453]			XA-0750-4		562.00 [254.92]
FW2500-7002X5L__			48.9" [1242]	69.5" [1765]			XA-0750-5		615.00 [278.96]
FW2500-7002X6L__			61.2" [1554]	82.0" [2083]			XA-0750-6		673.00 [305.27]
FW2500-7002X7L__			73.4"	94.0" [2388]			XA-0750-7		475.00 [215.46]

◊ For right-hand release fifth wheels, change "L" to "R" in part number.
* No longer available.
** See bracket section for more information.

XL-FW10081PM-en-US Rev D 2016-03-01 Amendments and errors reserved. © SAF-HOLLAND, Inc.

LEGACY FW PART NUMBER*◊	SLIDE BRACKET TYPE	HEIGHT	SLIDE TRAVEL	SLIDE BASE LENGTH	B	C	REPLACEMENT SLIDE BASE**	REPLACEMENT BRACKETS**	FW WEIGHT LBS [KG]
FW2500-7001X1L__	Air Release	8.7" [221]	12.2" [310]	32.8" [833]	16°	19°	XA-0750-1	XA-7001	471.00 [213.64]
FW2500-7001X2L__			18.4" [467]	38.9" [988]			XA-0750-2		499.00 [226.34]
FW2500-7001X3L__			24.5" [622]	45.0" [1143]			XA-0750-3		523.00 [237.23]
FW2500-7001X4L__			36.7" [932]	57.2" [1453]			XA-0750-4		576.00 [261.27]
FW2500-7001X5L__			48.9" [1242]	69.5" [1765]			XA-0750-5		629.00 [285.31]
FW2500-7001X6L__			61.2" [1554]	82.0" [2083]			XA-0750-6		688.00 [312.07]
FW2500-7301X1L__		8.2" [208]	10.7" [272]	38.9" [988]	16°	15°	XA-0751-1	XA-7301	471.00 [213.64]
FW2500-7301X2L__			16.8" [427]	45.0" [1143]			XA-0751-2		485.00 [219.99]
FW2500-7301X3L__			24.5" [622]	52.6" [1336]			XA-0751-3A		514.00 [233.15]
FW2500-7301X4L__			41.3" [1049]	69.5" [1765]			XA-0751-4		534.00 [242.22]
FW2500-7301X5L__			53.6" [1361]	82.0" [2083]			XA-0751-5		579.00 [262.63]
FW2500-7301X6L__			65.8" [1671]	94.0" [2388]			XA-0751-6		610.00 [276.69]
FW2500-7009X2L__		10.2"	13.8" [351]	38.9" [988]	21°	22°	XA-0750-2	XA-7009	510.00 [231.33]
FW2500-7009X3L__			19.9" [505]	45.0" [1143]			XA-0750-3		535.00 [242.67]
FW2500-7009X4L__			32.1" [815]	57.2" [1453]			XA-0750-4		587.00 [266.26]
FW2500-7009X5L__			44.4" [1128]	69.5" [1765]			XA-0750-5		641.00 [290.75]
FW2500-7009X6L__			56.6" [1438]	82.0" [2083]			XA-0750-6		727.00 [329.76]
FW2500-7013X1L__	Manual Release	6.7" [170]	10.7" [272]	38.9" [988]	11°	5°	XA-0751-1	XA-7013	455.00 [206.38]
FW2500-7013X2L__			16.8" [427]	45.0" [1143]			XA-0751-2		468.00 [212.28]
FW2500-7013X3L__			24.5" [622]	52.6" [1336]			XA-0751-3A		489.00 [221.81]
FW2500-7013X4L__			41.3" [1049]	69.5" [1765]			XA-0751-4		532.00 [241.31]
FW2500-7013X5L__			53.6" [1361]	82.0" [2083]			XA-0751-5		563.00 [255.37]
FW2500-7013X6L__			65.8" [1671]	94.0" [2388]			XA-0751-6		594.00 [269.43]
FW2500-7012X1L__		7.7" [196]	12.2" [310]	32.8" [833]	14°	11°	XA-0750-1	XA-7012	465.00 [210.92]
FW2500-7012X2L__			18.4" [467]	38.9" [988]			XA-0750-2		493.00 [223.62]
FW2500-7012X3L__			24.5" [622]	45.0" [1143]			XA-0750-3		518.00 [234.96]
FW2500-7012X4L__			36.7" [932]	57.2" [1453]			XA-0750-4		571.00 [259.00]
FW2500-7012X5L__			48.9" [1242]	69.5" [1765]			XA-0750-5		624.00 [283.04]
FW2500-7012X6L__			61.2" [1554]	82.0" [2083]			XA-0750-6		682.00 [309.35]
FW2500-7011X1L__		8.7" [221]	12.2" [310]	32.8" [833]	16°	19°	XA-0750-1	XA-7011	471.00 [213.64]
FW2500-7011X2L__			18.4" [467]	38.9" [988]			XA-0750-2		499.00 [226.34]
FW2500-7011X3L__			24.5" [622]	45.0" [1143]			XA-0750-3		524.00 [237.68]
FW2500-7011X4L__			36.7" [932]	57.2" [1453]			XA-0750-4		576.00 [261.27]
FW2500-7011X5L__			48.9" [1242]	69.5" [1765]			XA-0750-5		629.00 [285.31]
FW2500-7011X6L__			61.2" [1554]	82.0" [2083]			XA-0750-6		688.00 [312.07]
FW2500-7311X1L__		8.2" [208]	10.7" [272]	38.9" [988]	16°	13°	XA-0751-1	XA-7311	462.00 [209.56]
FW2500-7311X2L__			16.8" [427]	45.0" [1143]			XA-0751-2		476.00 [215.91]
FW2500-7311X3L__			24.5" [622]	52.6" [1336]			XA-0751-3A		494.00 [224.07]
FW2500-7311X4L__			41.3" [1049]	69.5" [1765]			XA-0751-4		525.00 [238.14]
FW2500-7311X5L__			53.6" [1361]	82.0" [2083]			XA-0751-5		570.00 [258.55]
FW2500-7311X6L__			65.8" [1671]	94.0" [2388]			XA-0751-6		601.00 [272.61]
FW2500-7019X2L__		10.2"	13.8" [351]	38.9" [988]	21°	21°	XA-0750-2	XA-7019	529.00 [239.95]
FW2500-7019X3L__			19.9" [505]	45.0" [1143]			XA-0750-3		554.00 [251.29]
FW2500-7019X4L__			32.1" [815]	57.2" [1453]			XA-0750-4		607.00 [275.33]
FW2500-7019X5L__			44.4" [1128]	69.5" [1765]			XA-0750-5		660.00 [299.37]
FW2500-7019X6L__			56.6" [1438]	82.0" [2083]			XA-0750-6		718.00 [325.68]

◊ For right-hand release fifth wheels, change "L" to "R" in part number.
* No longer available.
** See bracket section for more information.

 Amendments and errors reserved. © SAF-HOLLAND, Inc.

FW2500 Sliding Traditional
No Tilt Outboard Mount

Discontinued - Replacement Parts Only

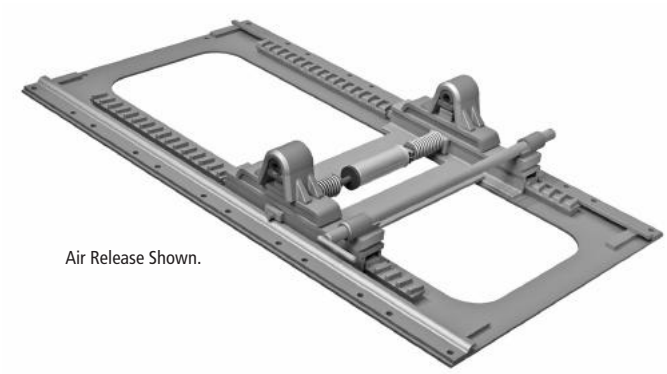

Air Release Shown.

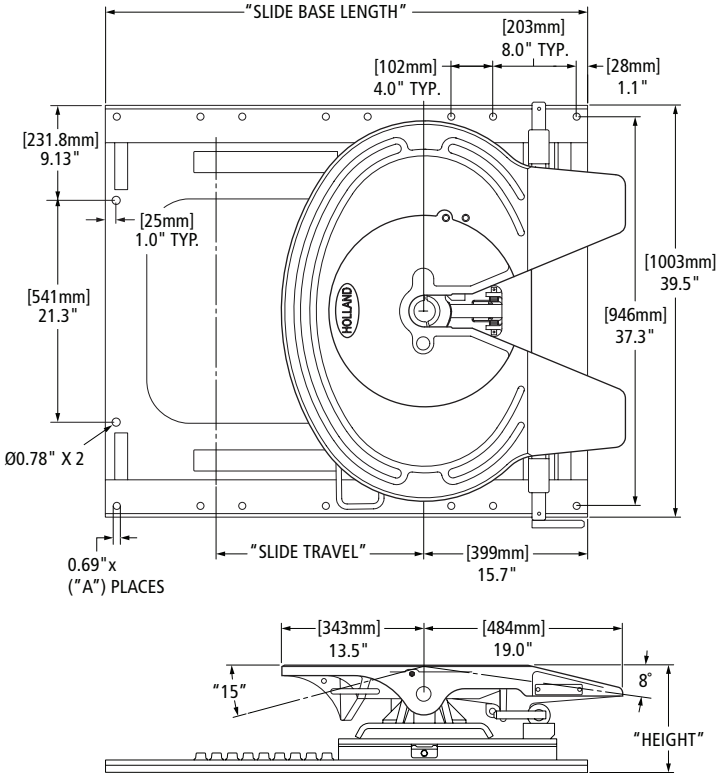

PART NUMBER*◊	SLIDE BRACKET TYPE	HEIGHT	SLIDE TRAVEL	SLIDE BASE LENGTH	A # OF HOLES	REPLACEMENT SLIDE BASE AND BRACKET**	REPLACEMENT SLIDE BASE**	REPLACEMENT BRACKET **	FW WEIGHT LBS [KG]
FW2500-8401T2L06	Air Release	8.6"	13.8" [351]	42.2" [1072]	16	XA-8401-T2	XA-07871-2	XA-7401	550.00 [249.48]
FW2500-8401T3L06			19.9" [505]	46.2" [1173]	16	XA-8401-T3	XA-07871-3		563.00 [255.37]
FW2500-8401T4L06			32.1" [815]	58.2" [1478]	20	XA-8401-T4	XA-07871-4		603.00 [273.52]
FW2500-8401T5L06			44.4" [1128]	70.2" [1783]	24	XA-8401-T5	XA-07871-5		643.00 [291.66]
FW2500-8409T2L06		10.1"	13.8" [351]	42.2" [1072]	16	XA-8409-T2	XA-07871-2	XA-7409	577.00 [261.72]
FW2500-8409T3L06			19.9" [505]	46.2" [1173]	16	XA-8409-T3	XA-07871-3		591.00 [268.07]
FW2500-8409T4L06			32.1" [815]	58.2" [1478]	20	XA-8409-T4	XA-07871-4		631.00 [286.22]
FW2500-8409T5L06			44.4" [1128]	70.2" [1783]	24	XA-8409-T5	XA-07871-5		671.00 [304.36]
FW2500-8411T2L06	Manual Release	8.6"	13.8" [351]	42.2" [1072]	16	XA-8411-T2	XA-07871-2	XA-7411	550.00 [249.48]
FW2500-8411T3L06			19.9" [505]	46.2" [1173]	16	XA-8411-T3	XA-07871-3		563.00 [255.37]
FW2500-8411T4L06			32.1" [815]	58.2" [1478]	20	XA-8411-T4	XA-07871-4		603.00 [273.52]
FW2500-8411T5L06			44.4" [1128]	70.2" [1783]	24	XA-8411-T5	XA-07871-5		643.00 [291.66]
FW2500-8419T2L06		10.1"	13.8" [351]	42.2" [1072]	16	XA-8419-T2	XA-07871-2	XA-7419	577.00 [261.72]
FW2500-8419T3L06			19.9" [505]	46.2" [1173]	16	XA-8419-T3	XA-07871-3		591.00 [268.07]
FW2500-8419T4L06			32.1" [815]	58.2" [1478]	20	XA-8419-T4	XA-07871-4		631.00 [286.22]
FW2500-8419T5L06			44.4" [1128]	70.2" [1783]	24	XA-8419-T5	XA-07871-5		671.00 [304.36]

◊ For right-hand release fifth wheels, change "L" to "R" in part number.
* No longer available.
** See bracket section for more information.

NOTE: See Accessories Section for No-Tilt Kits. Not included in Replacement Bracket part number.

XL-FW10081PM-en-US Rev D 2016-03-01 Amendments and errors reserved. © SAF-HOLLAND, Inc.

FW2500 Sliding Traditional No Tilt Inboard for Angle Mount

Also Available With Angle Later In This Section
Discontinued - Replacement Parts Only

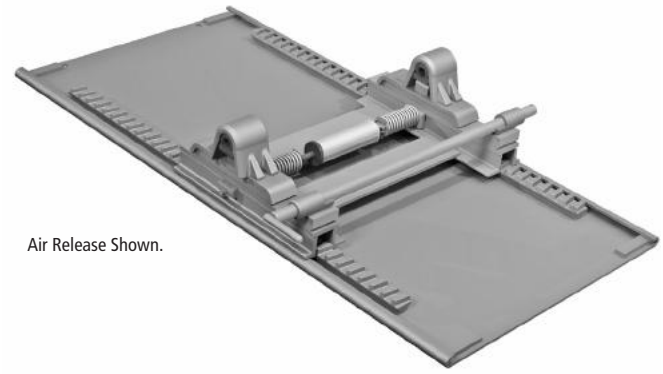

Air Release Shown.

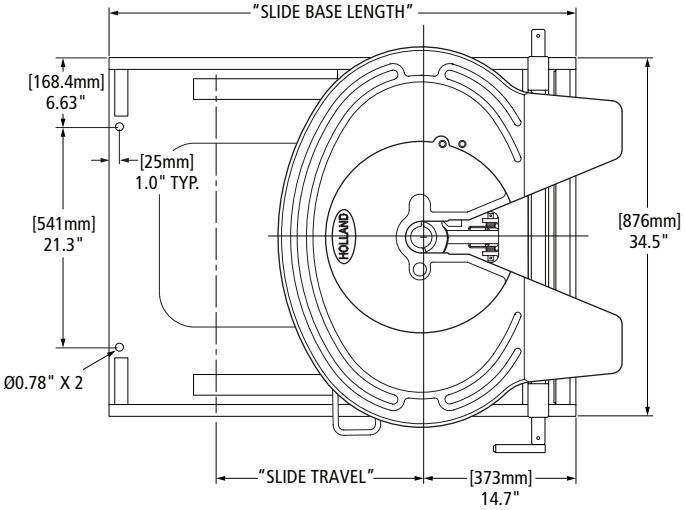

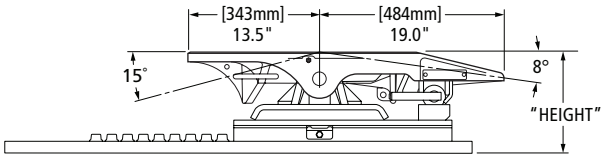

PART NUMBER*◊	SLIDE BRACKET TYPE	HEIGHT	SLIDE TRAVEL	SLIDE BASE LENGTH	REPLACEMENT SLIDE BASE**	REPLACEMENT BRACKET **	FW WEIGHT LBS [KG]
FW2500-7401X2L06	Air Release	8.6"	13.9"	38.9" [988]	XA-0751-2	XA-7401	509.00 [230.88]
FW2500-7401X3L06			20.0"	45.0" [1143]	XA-0751-3		524.00 [237.68]
FW2500-7401X4L06			32.2"	57.2" [1453]	XA-0751-4		496.00 [224.98]
FW2500-7401X5L06			44.4" [1128]	69.5" [1765]	XA-0751-5		524.00 [237.68]
FW2500-7401X6L06			56.7"	82.0" [2083]	XA-0751-6		499.00 [226.34]
FW2500-7409X2L06		10.1"	13.9"	38.9" [988]	XA-0751-2	XA-7409	586.00 [265.81]
FW2500-7409X3L06			20.0"	45.0" [1143]	XA-0751-3		604.00 [273.97]
FW2500-7409X4L06			32.2"	57.2" [1453]	XA-0751-4		645.00 [292.57]
FW2500-7409X5L06			44.4" [1128]	69.5" [1765]	XA-0751-5		701.00 [317.97]
FW2500-7409X6L06			56.7"	82.0" [2083]	XA-0751-6		751.00 [340.65]
FW2500-7411X2L06	Manual Release	8.6"	13.9"	38.9" [988]	XA-0751-2	XA-7411	509.00 [230.88]
FW2500-7411X3L06			20.0"	45.0" [1143]	XA-0751-3		524.00 [237.68]
FW2500-7411X4L06			32.2"	57.2" [1453]	XA-0751-4		496.00 [224.98]
FW2500-7411X5L06			44.4" [1128]	69.5" [1765]	XA-0751-5		524.00 [237.68]
FW2500-7411X6L06			56.7"	82.0" [2083]	XA-0751-6		499.00 [226.34]
FW2500-7419X2L06		10.1"	13.9"	38.9" [988]	XA-0751-2	XA-7419	586.00 [265.81]
FW2500-7419X3L06			20.0"	45.0" [1143]	XA-0751-3		604.00 [273.97]
FW2500-7419X4L06			32.2"	57.2" [1453]	XA-0751-4		645.00 [292.57]
FW2500-7419X5L06			44.4" [1128]	69.5" [1765]	XA-0751-5		701.00 [317.97]
FW2500-7419X6L06			56.7"	82.0" [2083]	XA-0751-6		751.00 [340.65]

◊ For right-hand release fifth wheels, change "L" to "R" in part number.
* No longer available.
** See bracket section for more information.

NOTE: See Accessories Section for No-Tilt Kits. Not included in Replacement Bracket part number.

 Amendments and errors reserved. © SAF-HOLLAND, Inc.

SAF-HOLLAND Group

FW2040 Stationary Kompensator Outboard Plate Mount

Discontinued - Replacement Parts Only



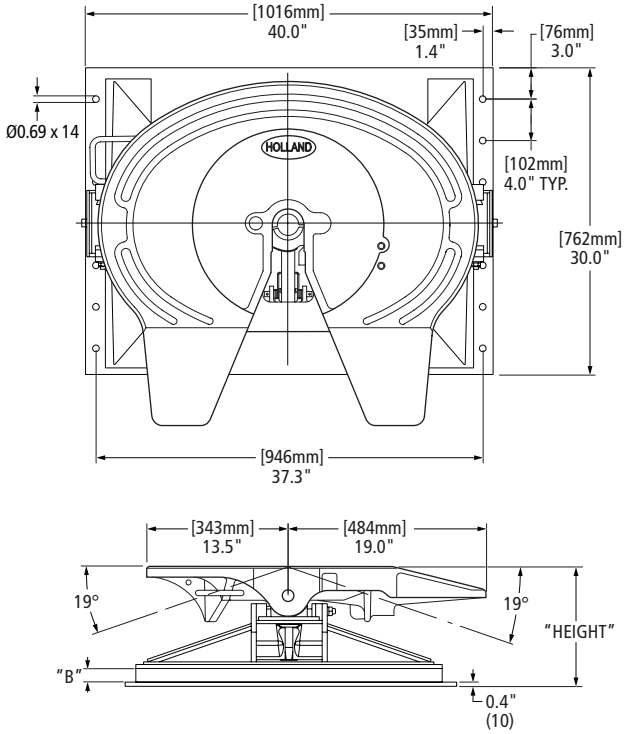

STANDARD OPTION CODES Replaces the Underscore (__) on the legacy part number.	
NUMBER CODE	DESCRIPTION
Blank	Standard, No Other Options
02	Manual Secondary Lock

PART NUMBER*◊	HEIGHT	B	REPLACEMENT BRACKET**	FW WEIGHT LBS [KG]
FW2040-7726XL__	12.9"	3.00"	XA-40-7726	649.00 [294.38]
FW2040-7727XL__	11.9"	2.0"	XA-40-7727	640.00 [290.30]
FW2040-7729XL__	9.9"	— +	XA-40-7729	575.00 [260.82]

◊ For right-hand release fifth wheels, change "L" to "R" in part number.
* No longer available.
+ Kompensator frame is mounted directly to plate, and extends 1.17" below bottom of plate.
** See bracket section for more information.

FW2040 Stationary Kompensator Inboard Plate Mount for Angle Mounting

Discontinued - Replacement Parts Only



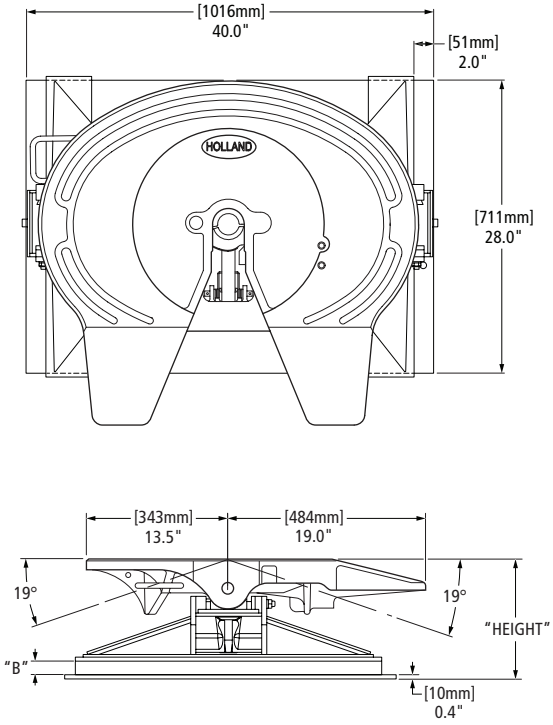

STANDARD OPTION CODES Replaces the Underscore (__) on the legacy part number.	
NUMBER CODE	DESCRIPTION
Blank	Standard, No Other Options
02	Manual Secondary Lock

PART NUMBER*◊	HEIGHT	B	REPLACEMENT BRACKET**	FW WEIGHT LBS [KG]
FW2040-7721XL__	12.9"	3.0"	XA-40-7724	643.00 [291.66]
FW2040-7722XL__	11.9"	2.0"	XA-40-7722	632.00 [286.67]
FW2040-7723XL__	9.9"	— +	XA-40-7723	657.00 [298.01]

◊ For right-hand release fifth wheels, change "L" to "R" in part number.
* No longer available.
+ Kompensator frame is mounted directly to plate, and extends 1.17" below bottom of plate.
** See bracket section for more information.

XL-FW10081PM-en-US Rev D 2016-03-01 Amendments and errors reserved. © SAF-HOLLAND, Inc.

FW2040 Stationary Kompensator Inboard for Angle Mount

Also Available With Angle Later In This Section
Discontinued - Replacement Parts Only



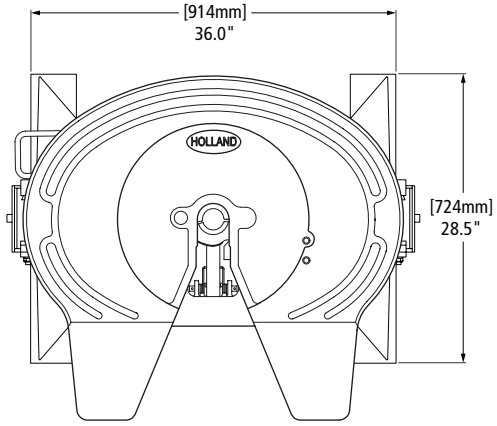

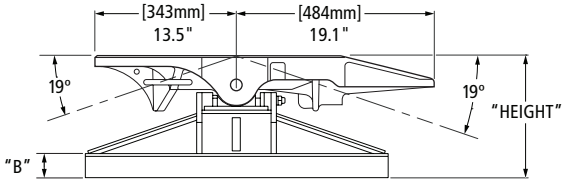

STANDARD OPTION CODES Replaces the Underscore (__) on the legacy part number.	
NUMBER CODE	DESCRIPTION
Blank	Standard, No Other Options
02	Manual Secondary Lock

PART NUMBER*◊	HEIGHT	B	REPLACEMENT BRACKET**	FW WEIGHT LBS [KG]
FW2040-7701XL__	12.5"	3.0"	XA-40-7701	523.00 [237.23]
FW2040-7702XL__	11.5"	2.0"	XA-40-7702	513.00 [232.69]
FW2040-7703XL__	9.5"	— *	XA-40-7703	469.00 [212.73]

◊ For right-hand release fifth wheels, change "L" to "R" in part number.
* No longer available.
+ Kompensator frame is mounted directly to plate, and extends 1.17" below bottom of plate.
** See bracket section for more information.

FW2090 Sliding Kompensator Inboard for Angle Mount

Discontinued - Replacement Parts Only



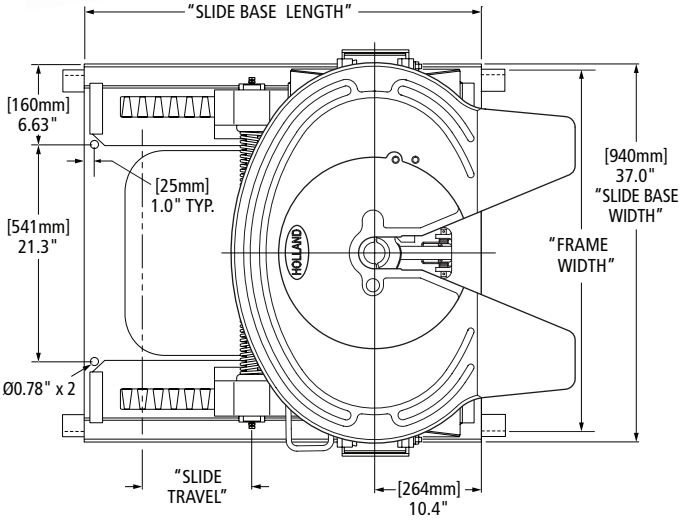

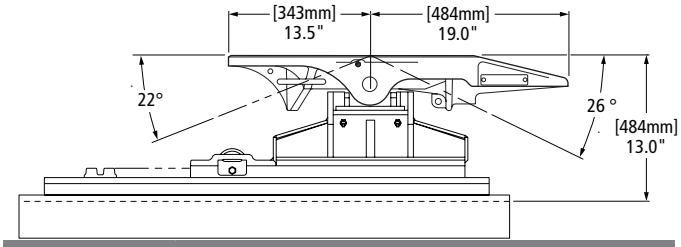

STANDARD OPTION CODES Replaces the Underscore (__) on the legacy part number.	
NUMBER CODE	DESCRIPTION
Blank	Standard, No Other Options
02	Manual Secondary Lock

PART NUMBER*◊	SLIDE TRAVEL	SLIDE BASE LENGTH	REPLACEMENT SLIDE BASE**	REPLACEMENT BRACKET**	FW WEIGHT LBS [KG]
FW2090-7201X1L__	10.7" [272]	38.9" [988]	XA-0284-1	XA-7201	752.00 [341.10]
FW2090-7201X2L__	16.8" [427]	45.0"[1143]	XA-0284-2		771.00 [349.72]
FW2090-7201X3L__	24.5" [622]	52.6" [1336]	XA-0284-3A		828.00 [375.57]
FW2090-7201X4L__	41.3" [1049]	69.5" [1765]	XA-0284-4		912.00 [413.68]
FW2090-7201X5L__	53.6" [1361]	82.0" [2083]	XA-0284-5		986.00 [447.24]
FW2090-7201X6L__	65.8" [1671]	94.0" [2388]	XA-0284-6		1051.00 [476.73]

◊ For right-hand release fifth wheels, change "L" to "R" in part number.
* No longer available.
** See bracket section for more information.

 Amendments and errors reserved. © SAF-HOLLAND, Inc.

FW2000 Stationary Brackets with Angle Mount

Discontinued - Replacement Parts Only



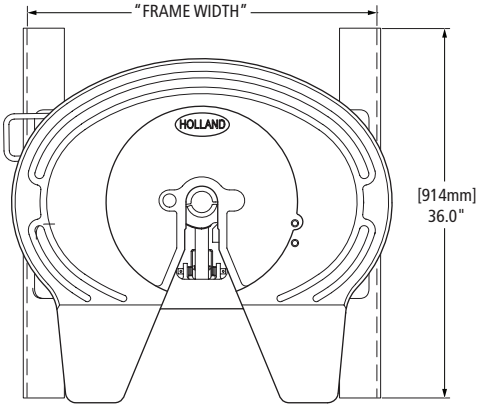

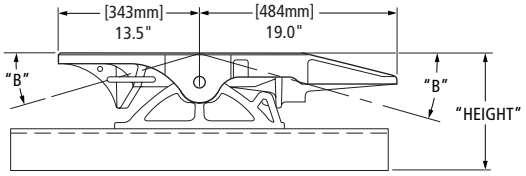

Frame width "A-G": .38" x 4" x 4" angle
"H-N": .38" x 4" x 6" angle

STANDARD OPTION CODES Replaces the Underscore (__) on the legacy part number.	
NUMBER CODE	DESCRIPTION
Blank	Standard, No Other Options
02	Manual Secondary Lock

FW PART NUMBER FABRICATED*◊	HEIGHT	B	REPLACEMENT BRACKETS**	FW WEIGHT LBS [KG]
FW2000-7814GL__	5.6"	8°	RK-W600-G	329.00 [149.23]
FW2000-7813GL__	6.6"	11°	RK-W700-G	334.00 [151.50]
FW2000-7812GL__	7.6"	14°	RK-W800-G	339.00 [153.77]
FW2000-7811GL__	8.6"	17°	RK-W900-G	344.00 [156.04]
FW2000-7553GL__	10.5"	15°	XA-7553-G	339.00 [153.77]
FW2000-7552GL__	10.5"	15°	XA-7552-G	375.00 [170.10]
FW2000-7551GL__	12.5"	15°	XA-7551-G	382.00 [173.27]

◊ For right-hand release fifth wheels, change "L" to "R" in part number.
* No longer available.
** See bracket section for more information.

FRAME WIDTH CODE CHART					
CODE	FRAME WIDTH	CODE	FRAME WIDTH	CODE	FRAME WIDTH
A	33.25"	F	33.88"	L	34.50"
B	33.38"	G†	34.00"	M	34.62"
C	33.50"	H	34.12"	N	34.75"
D	33.62"	J	34.25"		
E	33.75"	K	34.38"		

† Standard

XL-FW10081PM-en-US Rev D 2016-03-01 Amendments and errors reserved. © SAF-HOLLAND, Inc.

FW2000 Stationary No Tilt Inboard with Angle Mount

Discontinued - Replacement Parts Only

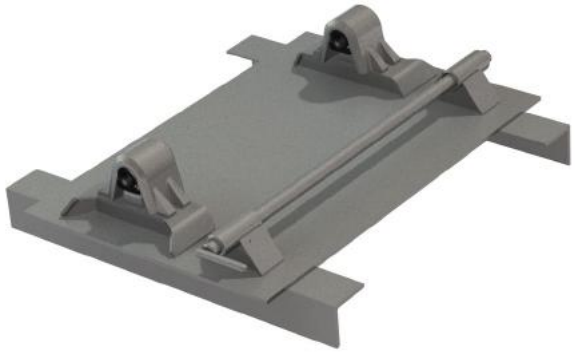

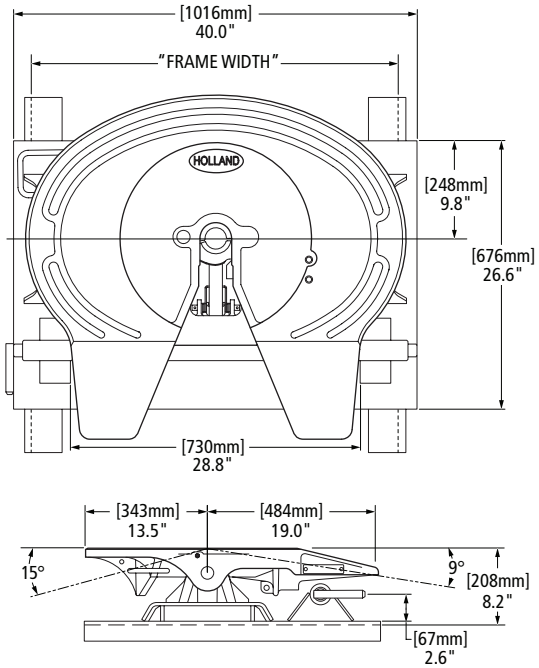

"Angle size" see chart.

FW PART NUMBER*◊	FRAME WIDTH	ANGLE SIZE	REPLACEMENT BRACKET**	FW WEIGHT LBS [KG]
FW2000-8922AL06	33.25"	4" x 4" x .31"	XA-08408-A	506.00 [229.52]
FW2000-8922BL06	33.38"		XA-08408-B	507.00 [229.97]
FW2000-8922CL06	33.50"		XA-08408-C	507.00 [229.97]
FW2000-8922DL06	33.62"		XA-08408-D	508.00 [230.42]
FW2000-8922EL06	33.75"		XA-08408-E	508.00 [230.42]
FW2000-8922FL06	33.88"		XA-08408-F	509.00 [230.88]
FW2000-8922GL06	34.00"		XA-08408-G	509.00 [230.88]
FW2000-8922HL06	34.12"		XA-08408-H	510.00 [231.33]
FW2000-8922JL06	34.25"		XA-08408-J	510.00 [231.33]
FW2000-8922KL06	34.38"		XA-08408-K	511.00 [231.79]
FW2000-8922LL06	34.50"		XA-08408-L	512.00 [232.24]

FW PART NUMBER*◊	FRAME WIDTH	ANGLE SIZE	REPLACEMENT BRACKET**	FW WEIGHT LBS [KG]
FW2000-8922AL65	33.25"	4" x 4" x .38"	XA-08408-A-65	495.00 [224.53]
FW2000-8922BL65	33.38"		XA-08408-B-65	496.00 [224.98]
FW2000-8922CL65	33.50"		XA-08408-C-65	496.00 [224.98]
FW2000-8922DL65	33.62"		XA-08408-D-65	497.00 [225.44]
FW2000-8922EL65	33.75"		XA-08408-E-65	497.00 [225.44]
FW2000-8922FL65	33.88"		XA-08408-F-65	498.00 [225.89]
FW2000-8922GL65	34.00"		XA-08408-G-65	498.00 [225.89]
FW2000-8922HL65	34.12"		XA-08408-H-65	499.00 [226.34]
FW2000-8922JL65	34.25"		XA-08408-J-65	499.00 [226.34]
FW2000-8922KL65	34.38"		XA-08408-K-65	500.00 [226.80]
FW2000-8922LL65	34.50"		XA-08408-L-65	500.00 [226.80]

◊ For right-hand release fifth wheels, change "L" to "R" in part number.
* No longer available.
** See bracket section for more information.

NOTE: See Accessories Section for No-Tilt Kits. Not included in Replacement Bracket part number.

 Amendments and errors reserved. © SAF-HOLLAND, Inc.

SAF-HOLLAND Group

FW2500 Sliding Traditional No Tilt Inboard with Angle Mount

Discontinued - Replacement Parts Only



Air Release Shown.

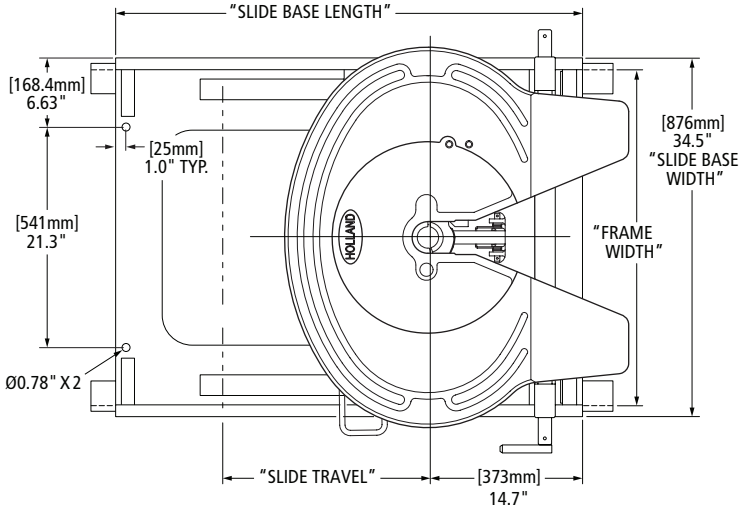

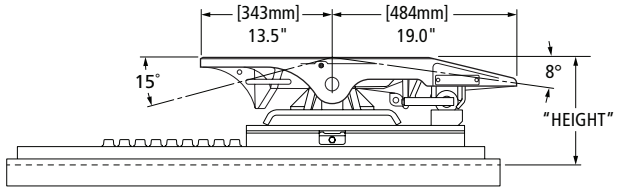

Frame width "A-Q": .38" x 4" x 4" angle

FRAME WIDTH CODE CHART					
CODE	FRAME WIDTH	CODE	FRAME WIDTH	CODE	FRAME WIDTH
A	33.25"	F	33.88"	M	34.62"
B	33.38"	G†	34.00"	N	34.75"
C	33.50"	H	34.12"	P	34.88"
D	33.62"	K	34.38"	Q	35.00"
E	33.75"	L	34.50"		

† Standard

PART NUMBER*◊	SLIDE BRACKET TYPE	HEIGHT	SLIDE TRAVEL	SLIDE BASE LENGTH	REPLACEMENT SLIDE BASE AND BRACKET**	REPLACEMENT SLIDE BASE**	REPLACEMENT BRACKET **	FW WEIGHT LBS [KG]
FW2500-7401G2L06	AIR RELEASE	9.0"	13.9"	38.9" [988]	XA-7401-G2-__	XA-0752-G2-__	XA-7401	620.00 [281.23]
FW2500-7401G3L06			20.0"	45.0" [1143]	XA-7401-G3-__	XA-0752-G3-__		658.00 [298.46]
FW2500-7401G4L06			32.2"	57.2" [1453]	XA-7401-G4-__	XA-0752-G4-__		730.00 [331.12]
FW2500-7401G5L06			44.4" [1128]	69.5" [1765]	XA-7401-G5-__	XA-0752-G5-__		795.00 [360.61]
FW2500-7401G6L06			56.7"	82.0" [2083]	XA-7401-G6-__	XA-0752-G6-__		866.00 [392.81]
FW2500-7409G2L06		10.9"	13.9"	38.9" [988]	XA-7409-G2-__	XA-0752-G2-__	XA-7409	628.00 [284.86]
FW2500-7409G3L06			20.0"	45.0" [1143]	XA-7409-G3-__	XA-0752-G3-__		666.00 [302.09]
FW2500-7409G4L06			32.2"	57.2" [1453]	XA-7409-G4-__	XA-0752-G4-__		738.00 [334.75]
FW2500-7409G5L06			44.4" [1128]	69.5" [1765]	XA-7409-G5-__	XA-0752-G5-__		803.00 [364.23]
FW2500-7409G6L06			56.7"	82.0" [2083]	XA-7409-G6-__	XA-0752-G6-__		874.00 [396.44]
FW2500-7411G2L06	MANUAL RELEASE	9.0"	13.9"	38.9" [988]	XA-7411-G2-__	XA-0752-G2-__	XA-7411	625.00 [283.50]
FW2500-7411G3L06			20.0"	45.0" [1143]	XA-7411-G3-__	XA-0752-G3-__		663.00 [300.73]
FW2500-7411G4L06			32.2"	57.2" [1453]	XA-7411-G4-__	XA-0752-G4-__		735.00 [333.39]
FW2500-7411G5L06			44.4" [1128]	69.5" [1765]	XA-7411-G5-__	XA-0752-G5-__		800.00 [362.87]
FW2500-7411G6L06			56.7"	82.0" [2083]	XA-7411-G6-__	XA-0752-G6-__		871.00 [395.08]
FW2500-7419G2L06		10.9"	13.9"	38.9" [988]	XA-7419-G2-__	XA-0752-G2-__	XA-7419	633.00 [287.12]
FW2500-7419G3L06			20.0"	45.0" [1143]	XA-7419-G3-__	XA-0752-G3-__		671.00 [304.36]
FW2500-7419G4L06			32.2"	57.2" [1453]	XA-7419-G4-__	XA-0752-G4-__		743.00 [337.02]
FW2500-7419G5L06			44.4" [1128]	69.5" [1765]	XA-7419-G5-__	XA-0752-G5-__		808.00 [366.50]
FW2500-7419G6L06			56.7"	82.0" [2083]	XA-7419-G6-__	XA-0752-G6-__		879.00 [398.71]

◊ For right-hand release fifth wheels, change "L" to "R" in part number.
* No longer available.
** See bracket section for more information.

XL-FW10081PM-en-US Rev D 2016-03-01 Amendments and errors reserved. © SAF-HOLLAND, Inc.

THIS PAGE INTENTIONALLY LEFT BLANK

 Amendments and errors reserved. © SAF-HOLLAND, Inc.

SAF-HOLLAND Group

FW2500 Sliding Traditional Inboard with Angle Mount

Discontinued - Replacement Parts Only

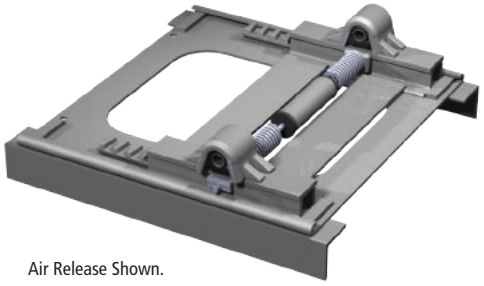

Air Release Shown.

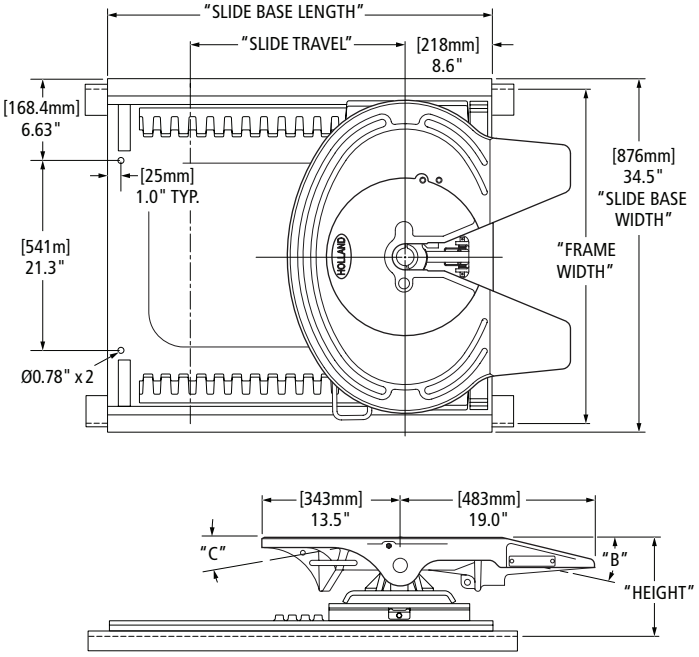

Frame Width "A-L": .38" x 4" x 4" Angle
"M-Q": .38" x 5" x 5" Angle (Option Code 21)
See option codes for other options.

FRAME WIDTH CODE CHART					
CODE	FRAME WIDTH	CODE	FRAME WIDTH	CODE	FRAME WIDTH
A	33.25"	F	33.88"	M	34.62"
B	33.38"	G†	**34.00"**	N	34.75"
C	33.50"	H	34.12"	P	34.88"
D	33.62"	K	34.38"	Q	35.00"
E	33.75"	L	34.50"		

† Standard

STANDARD OPTION CODES Replaces the Underscore (__) on the legacy part number.	
NUMBER CODE	DESCRIPTION
Blank	Standard, No Other Options
02	Manual Secondary Lock

LEGACY FW PART NUMBER*◊	SLIDE BRACKET TYPE	HEIGHT	SLIDE TRAVEL	SLIDE BASE LENGTH	B	C	REPLACEMENT SLIDE BASE**	REPLACEMENT BRACKET**	FW WEIGHT LBS [KG]
FW2500-7003G1L__	AIR RELEASE	7.1"	10.7" [272]	38.9" [988]	11°	7°	XA-0753-G1-__	XA-7003	531.00 [240.86]
FW2500-7003G2L__			16.8" [427]	45.0" [1143]			XA-0753-G2-__		555.00 [251.74]
FW2500-7003G3L__			24.5" [622]	52.6" [1336]			XA-0753-G3-__		588.00 [266.71]
FW2500-7003G4L__			41.3" [1049]	69.5" [1765]			XA-0753-G4-__		646.00 [293.02]
FW2500-7003G5L__			53.6" [1361]	82.0" [2083]			XA-0753-G5-__		727.00 [329.76]
FW2500-7003G6L__			65.8" [1671]	94.0" [2388]			XA-0753-G6-__		802.00 [363.78]
FW2500-7002G1L__		8.1"	12.2" [310]	32.8" [833]	14°	19°	XA-0753-G1-__	XA-7002	524.00 [237.68]
FW2500-7002G2L__			18.4" [467]	38.9" [988]			XA-0753-G2-__		573.00 [259.91]
FW2500-7002G3L__			24.5" [622]	45.0" [1143]			XA-0753-G3-__		595.00 [269.89]

◊ For right-hand release fifth wheels, change "L" to "R" in part number.
* No longer available if cast version exists.
** See bracket section for more information.

XL-FW10081PM-en-US Rev D 2016-03-01 Amendments and errors reserved. © SAF-HOLLAND, Inc.

LEGACY FW PART NUMBER*◊	SLIDE BRACKET TYPE	HEIGHT	SLIDE TRAVEL	SLIDE BASE LENGTH	B	C	REPLACEMENT SLIDE BASE**	REPLACEMENT BRACKET**	FW WEIGHT LBS [KG]
FW2500-7002G4L__	AIR RELEASE	8.1"	36.7" [932]	57.2" [1453]	14°	19°	XA-0753-G4-__	XA-7002	667.00 [302.55]
FW2500-7002G5L__			48.9" [1242]	69.5" [1765]			XA-0753-G5-__		742.00 [336.57]
FW2500-7002G6L__			61.2" [1554]	82.0" [2083]			XA-0753-G6-__		813.00 [368.77]
FW2500-7001G1L__		9.1"	12.2" [310]	32.8" [833]	16°	19°	XA-0753-G1-__	XA-7001	529.00 [239.95]
FW2500-7001G2L__			18.4" [467]	38.9" [988]			XA-0753-G2-__		578.00 [262.18]
FW2500-7001G3L__			24.5" [622]	45.0" [1143]			XA-0753-G3-__		600.00 [272.16]
FW2500-7001G4L__			36.7" [932]	57.2" [1453]			XA-0753-G4-__		672.00 [304.81]
FW2500-7001G5L__			48.9" [1242]	69.5" [1765]			XA-0753-G5-__		747.00 [338.83]
FW2500-7001G6L__			61.2" [1554]	82.0" [2083]			XA-0753-G6-__		818.00 [371.04]
FW2500-7301G1L__		8.6"	10.7" [272]	38.9" [988]	16°	15°	XA-0753-G1-__	XA-7301	539.00 [244.49]
FW2500-7301G2L__			16.8" [427]	45.0" [1143]			XA-0753-G2-__		563.00 [255.37]
FW2500-7301G3L__			24.5" [622]	52.6" [1336]			XA-0753-G3-__		596.00 [270.34]
FW2500-7301G4L__			41.3" [1049]	69.5" [1765]			XA-0753-G4-__		645.00 [292.57]
FW2500-7301G5L__			53.6" [1361]	82.0" [2083]			XA-0753-G5-__		735.00 [333.39]
FW2500-7301G6L__			65.8" [1671]	94.0" [2388]			XA-0753-G6-__		810.00 [367.41]
FW2500-7009G2L__		10.6"	13.8" [351]	38.9" [988]	21°	22°	XA-0752-G2-__	XA-7009	611.00 [277.14]
FW2500-7009G3L__			19.9" [505]	45.0" [1143]			XA-0752-G3-__		673.00 [305.27]
FW2500-7009G4L__			32.1" [815]	57.2" [1453]			XA-0752-G4-__		705.00 [319.78]
FW2500-7009G5L__			44.4" [1128]	69.5" [1765]			XA-0752-G5-__		780.00 [353.80]
FW2500-7009G6L__			56.6" [1438]	82.0" [2083]			XA-0752-G6-__		851.00 [386.01]
FW2500-7009G7L__			68.8" [1748]	94.0" [2388]			XA-0752-G7-__		935.00 [424.11]
FW2500-7013G1L__	MANUAL RELEASE	7.1"	10.7" [272]	38.9" [988]	11°	7°	XA-0753-G1-__	XA-7013	521.00 [236.32]
FW2500-7013G2L__			16.8" [427]	45.0" [1143]			XA-0753-G2-__		545.00 [247.21]
FW2500-7013G3L__			24.5" [622]	52.6" [1336]			XA-0753-G3-__		578.00 [262.18]
FW2500-7013G4L__			41.3" [1049]	69.5" [1765]			XA-0753-G4-__		636.00 [288.48]
FW2500-7013G5L__			53.6" [1361]	82.0" [2083]			XA-0753-G5-__		717.00 [325.23]
FW2500-7013G6L__			65.8" [1671]	94.0" [2388]			XA-0753-G6-__		792.00 [359.25]
FW2500-7012G1L__		8.1"	12.2" [310]	32.8" [833]	14°	19°	XA-0753-G1-__	XA-7012	523.00 [237.23]
FW2500-7012G2L__			18.4" [467]	38.9" [988]			XA-0753-G2-__		572.00 [259.45]
FW2500-7012G3L__			24.5" [622]	45.0" [1143]			XA-0753-G3-__		594.00 [269.43]
FW2500-7012G4L__			36.7" [932]	57.2" [1453]			XA-0753-G4-__		666.00 [302.09]
FW2500-7012G5L__			48.9" [1242]	69.5" [1765]			XA-0753-G5-__		741.00 [336.11]
FW2500-7012G6L__			61.2" [1554]	82.0" [2083]			XA-0753-G6-__		812.00 [368.32]
FW2500-7011G1L__		9.1"	12.2" [310]	32.8" [833]	16°	19°	XA-0753-G1-__	XA-7011	528.00 [239.50]
FW2500-7011G2L__			18.4" [467]	38.9" [988]			XA-0753-G2-__		577.00 [261.72]
FW2500-7011G3L__			24.5" [622]	45.0" [1143]			XA-0753-G3-__		599.00 [271.70]
FW2500-7011G4L__			36.7" [932]	57.2" [1453]			XA-0753-G4-__		671.00 [304.36]
FW2500-7011G5L__			48.9" [1242]	69.5" [1765]			XA-0753-G5-__		746.00 [338.38]
FW2500-7011G6L__			61.2" [1554]	82.0" [2083]			XA-0753-G6-__		817.00 [370.58]
FW2500-7311G1L__		8.6"	10.7" [272]	38.9" [988]	16°	15°	XA-0753-G1-__	XA-7311	530.00 [240.40]
FW2500-7311G2L__			16.8" [427]	45.0" [1143]			XA-0753-G2-__		554.00 [251.29]
FW2500-7311G3L__			24.5" [622]	52.6" [1336]			XA-0753-G3-__		587.00 [266.26]
FW2500-7311G4L__			41.3" [1049]	69.5" [1765]			XA-0753-G4-__		645.00 [292.57]
FW2500-7311G5L__			53.6" [1361]	82.0" [2083]			XA-0753-G5-__		726.00 [329.31]
FW2500-7311G6L__			65.8" [1671]	94.0" [2388]			XA-0753-G6-__		801.00 [363.33]
FW2500-7019G2L__		10.6"	13.8" [351]	38.9" [988]	21°	22°	XA-0752-G2-__	XA-7019	611.00 [277.14]
FW2500-7019G3L__			19.9" [505]	45.0" [1143]			XA-0752-G3-__		633.00 [287.12]
FW2500-7019G4L__			32.1" [815]	57.2" [1453]			XA-0752-G4-__		705.00 [319.78]
FW2500-7019G5L__			44.4" [1128]	69.5" [1765]			XA-0752-G5-__		780.00 [353.80]
FW2500-7019G6L__			56.6" [1438]	82.0" [2083]			XA-0752-G6-__		851.00 [386.01]
FW2500-7019G7L__			68.8" [1748]	94.0" [2388]			XA-0752-G7-__		935.00 [424.11]

◊ For right-hand release fifth wheels, change "L" to "R" in part number.
* No longer available if cast version exists.
** See bracket section for more information.

 Amendments and errors reserved. © SAF-HOLLAND, Inc.

SAF-HOLLAND Group

FW2040 Stationary Kompensator Inboard with Angle Mount

Discontinued - Replacement Parts Only



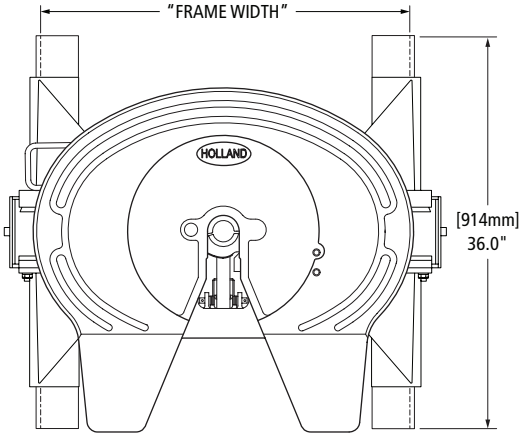

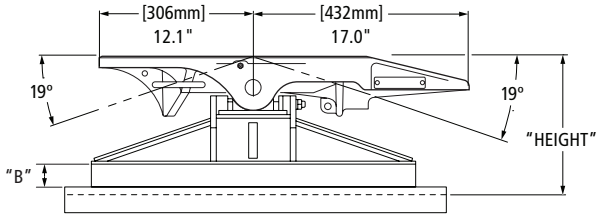

Frame width "A-L": .38" x 4" x 4" angle
"M-Q": .38" x 5" x 5" angle (option code 21)
See option codes for other options.

STANDARD OPTION CODES Replaces the Underscore (__) on the legacy part number.	
NUMBER CODE	DESCRIPTION
Blank	Standard, No Other Options
02	Manual Secondary Lock

PART NUMBER*◊	HEIGHT	B	REPLACEMENT BRACKET**	FW WEIGHT LBS [KG]
FW2040-7711GL__	12.9"	3.00"	XA-40-7711-G	582.00 [263.99]
FW2040-7712GL__	11.9"	2.00"	XA-40-7712-G	581.00 [263.54]
FW2040-7713GL__	9.9"	--- +	XA-40-7713-G	527.00 [239.04]

◊ For right-hand release fifth wheels, change "L" to "R" in part number.
* No longer available.
+ Kompensator frame bracket extends 1.2" below bottom side of angle.
** See bracket section for more information.

FRAME WIDTH CODE CHART					
CODE	FRAME WIDTH	CODE	FRAME WIDTH	CODE	FRAME WIDTH
A	33.25"	F	33.88"	M	34.62"
B	33.38"	G†	34.00"	N	34.75"
C	33.50"	H	34.12"	P	34.88"
D	33.62"	K	34.38"	Q	35.00"
E	33.75"	L	34.50"		

† Standard

XL-FW10081PM-en-US Rev D 2016-03-01 Amendments and errors reserved. © SAF-HOLLAND, Inc.

FW2090 Sliding Kompensator Inboard with Angle Mount

Discontinued - Replacement Parts Only



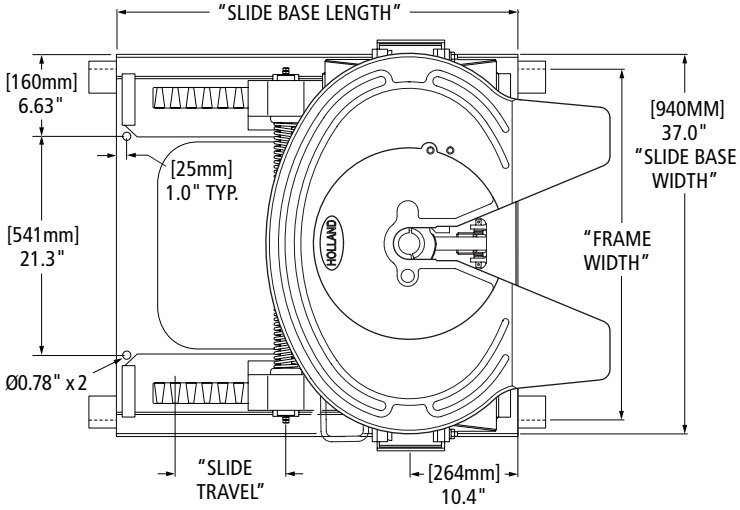

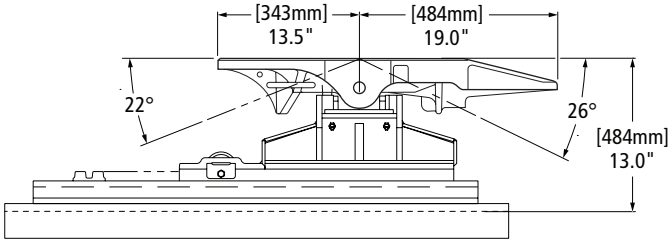

Frame width "A"-"K": .50" x 4" x 4" angle
See option codes for other angle sizes.

PART NUMBER*◊	SLIDE TRAVEL	SLIDE BASE LENGTH	REPLACEMENT SLIDE BASE**	REPLACEMENT BRACKET**	FW WEIGHT LBS [KG]
FW2090-7201G1L	10.7" [272]	38.9" [988]	XA-02136-G1	XA-7201	841.00 [381.47]
FW2090-7201G2L	16.8" [427]	45.0" [1143]	XA-02136-G2		878.00 [398.25]
FW2090-7201G3L	24.5" [622]	52.6" [1336]	XA-02136-G3A		948.00 [430.01]
FW2090-7201G4L	41.3" [1049]	69.5" [1765]	XA-02136-G4		1009.00 [457.67]
FW2090-7201G5L	53.6" [1361]	82.0" [2083]	XA-02136-G5		1153.00 [522.99]
FW2090-7201G6L	65.8" [1671]	94.0" [2388]	XA-02136-G6		1253.00 [568.35]

◊ For right-hand release fifth wheels, change "L" to "R" in part number.
* No longer available.
** See bracket section for more information.

FRAME WIDTH CODE CHART					
CODE	FRAME WIDTH	CODE	FRAME WIDTH	CODE	FRAME WIDTH
A	33.25"	E	33.75"	L	34.50"
B	33.38"	F	33.88"	J	34.25"
C	33.50"	G†	34.00"	K	34.38"
D	33.62"	H	34.12"		

† Standard

 Amendments and errors reserved. © SAF-HOLLAND, Inc.

Discontinued - Replacement Parts Only

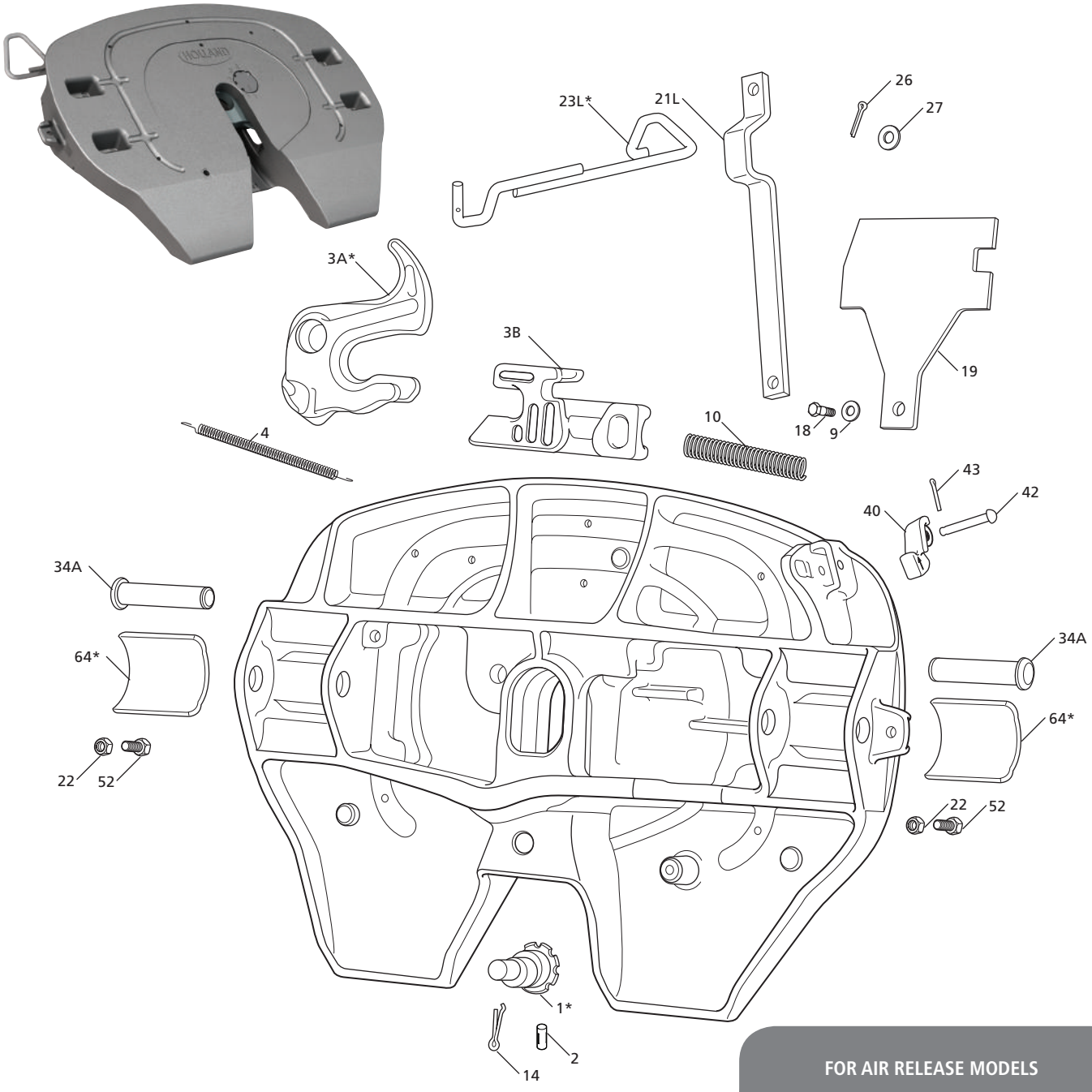

FOR AIR RELEASE MODELS

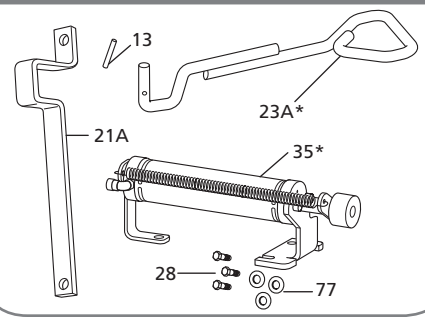

XL-FW10081PM-en-US Rev D 2016-03-01 Amendments and errors reserved. © SAF-HOLLAND, Inc

FWS1 PARTS LIST

ITEM	DESCRIPTION	PART NUMBER	QTY.	WEIGHT LBS [KG]
1*	Pin, Eccentric Jaw	XA-10971	1	1.87 [0.85]
2	Pin, Grooved	XB-11025	1	0.03 [0.01]
3A*	Lock Jaw, See RK-4109939	XA-4109939	1	8.48 [3.85]
3B	Lock	4109931	1	6.58 [2.98]
4	Spring, Jaw Return	1200101	1	0.10 [0.05]
9	Washer, .66" I.D. x 1.31" O.D.	XB-T-199	1	0.03 [0.01]
10	Spring, Lock	1200706	1	0.63 [0.29]
13	Pin, Spring, .19" Dia. x 1.15" Long	9900181	1	0.01 [0.005]
14	Pin, Cotter, .19" x 1.25" Long	9900170	1	0.01 [0.005]
18	HHSB, .50"-13 x 1.88" GR 5	XB-11127	1	0.16 [0.07]
19	Cover Plate	XA-10969	1	4.03 [1.83]
21A	Lever Bar, Air Release	XA-11113-P	1	2.63 [1.19]
21L	Lever Bar, Left-Hand	4100373	1	2.69 [1.22]
22	Lock Nut, .50"-20 GR C	XB-T-69-A	2	0.04 [0.02]
23A*	Release Handle, Air Release, See RK-11112	XA-11112	1	1.80 [0.82]
23L*	Release Handle, Left-Hand, See RK-10990	XA-10990	1	1.75 [0.79]
26	Pin, Cotter, .19" x 1.25" Long	XB-11091	1	0.01 [0.005]
27	Washer, .56" I.D. x 1.38" O.D.	XB-T-49	1	0.04 [0.02]
28	HHCS, .3"-16 x .63" GR 5	XB-11089	3	0.04 [0.02]
34A	Pin, Bracket	XE-06356-P	2	1.98 [0.90]
35*	Air Cylinder	XA-10999	1	6.98 [3.17]
40	Lock Indicator	XD-11121	1	0.71 [0.32]
42	Pin, Indicator	XB-10996	1	0.10 [0.04]
43	Pin, Cotter, .13" x 1.25" Long	84261	1	0.01 [0.005]
52	HHCS, .50"-20 x 1.25" GR 5	XB-C-95	2	0.11 [0.05]
64*	Pocket Insert, See RK-PKT-2	XD-08908	2	1.72 [0.78]
77	Washer, .41" I.D. x .81" O.D.	XB-PWM-38-78	3	0.01 [0.005]

*Not sold individually - must be purchased in kit.

NOTE: See Accessories Section for Air Release Kits.

REPLACEMENT TOP PLATE PART NUMBERS

PART NUMBER	DESCRIPTION
XA-S1-A-L-P	Left-Hand Release with Pins
XA-S1-A-80-L-P	Air Release with Pins
XA-S1-A-14-L-P	Left-Hand Release with Grease Fittings and Pins

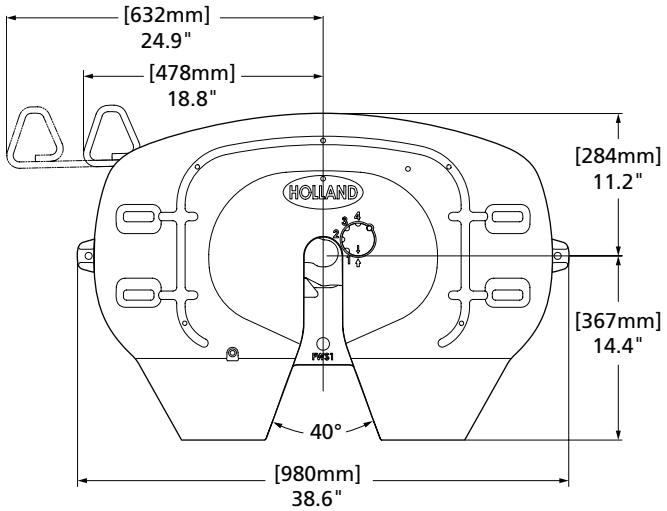

For XA-S1 fifth wheel rebuild procedures, see Holland publication XL-FW546 at www.safholland.us

 Amendments and errors reserved. © SAF-HOLLAND, Inc.

RK-PKT-2
Pocket Inserts

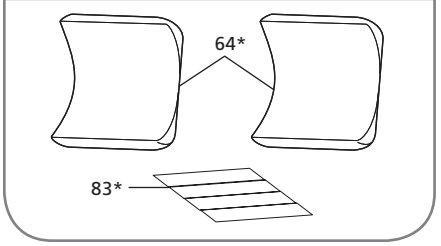

RK-10999
Air Cylinder

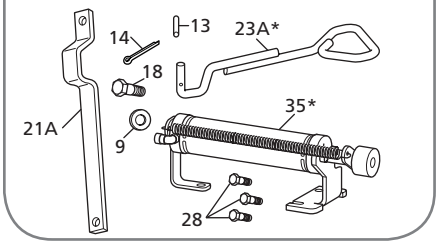

RK-4109939
Lock, Standard

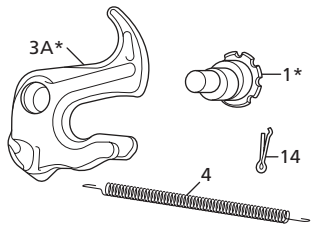

RK-10990
Release Handle, Left-Hand

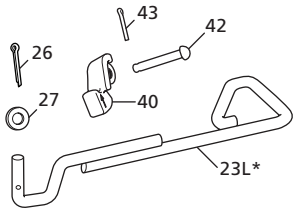

RK-11112
Release Handle, Air Release

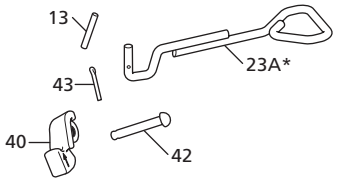

RK-06973-1
Bracket Pins and Cushions

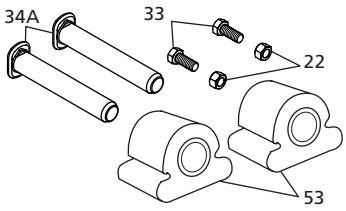

RK-10605
Bracket Pins and Bushings, ILS

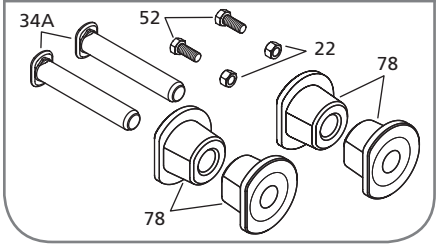

FWS1 KIT PARTS LIST

ITEM	DESCRIPTION	PART NUMBER	QTY.	WEIGHT LBS [KG]
1*	Pin, Eccentric Jaw	XA-10971	1	1.87 [0.85]
3A*	Lock Jaw	XA-4109939	1	8.48 [3.85]
4	Spring, Jaw Return	1200101	1	0.10 [0.05]
9	Washer, .66" I.D. x 1.31" O.D.	XB-T-199	1	0.03 [0.01]
13	Pin, Spring, .19" Dia. x 1.15" Long	9900181	1	0.01 [0.005]
14	Pin, Cotter, .19" Dia. x 1.25" Long	9900170	1	0.01 [0.005]
18	HHSB, .50"-13 x 1.88" GR 5	XB-11127	1	0.16 [0.07]
21A	Lever Bar, Air Release	XA-11113-P	1	2.63 [1.19]
22	Lock Nut, .50"-20	XB-T-69-A	2	0.04 [0.02]
23A*	Release Handle, Air Release	XA-11112	1	1.80 [0.82]
23L*	Release Handle, Left-Hand	XA-10990	1	1.75 [0.79]
26	Pin, Cotter, .19" Dia. x 1.25" Long	XB-11091	1	0.01 [0.005]
27	Washer, .56" I.D. x 1.38" O.D.	XB-T-49	1	0.04 [0.02]
28	HHCS, .38"-16 x .63" GR 5	XB-11089	3	0.04 [0.02]

FWS1 KIT PARTS LIST

ITEM	DESCRIPTION	PART NUMBER	QTY.	WEIGHT LBS [KG]
33	HHCS, .50"-20 x 1.25"	XB-C-95	2	0.11 [0.05]
34A	Pin, Bracket	XE-06356-P	2	1.98 [0.90]
35*	Air Cylinder	XA-10999	1	6.98 [3.17]
40	Lock Indicator	XD-11121	1	0.71 [0.32]
42	Pin, Indicator	XB-10996	1	0.10 [0.04]
43	Pin, Cotter, .13" Dia. x 1.25" Long	84261	1	0.01 [0.005]
53	Cushion, Rubber	XB-0011-2	2	0.60 [0.27]
64*	Pocket Insert	XD-08908	2	1.72 [0.78]
83*	Tape, Double Face	XB-09422	4	0.01 [0.005]
78	Cushions, Rubber, ILS	XB-10605	4	0.39 [0.18]

*Not sold individually - must be purchased in kit.

XL-FW10081PM-en-US Rev D 2016-03-01 Amendments and errors reserved. © SAF-HOLLAND, Inc.

RK-FWS-A-L
Complete Rebuild, Left-Hand Release

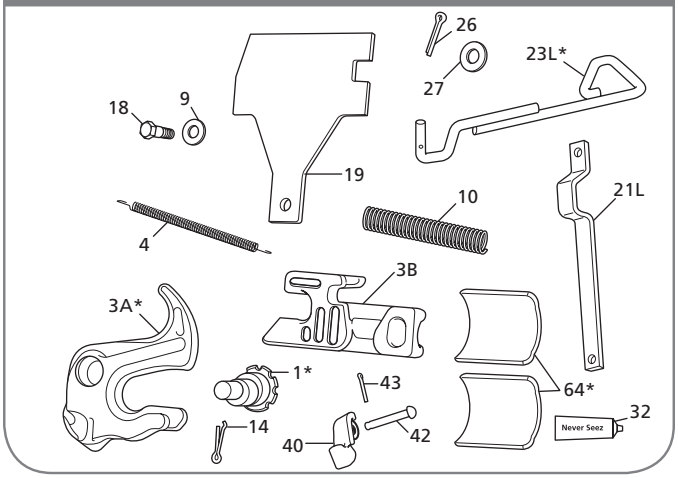

RK-FWS-A-80-L
Complete Rebuild, Air Release

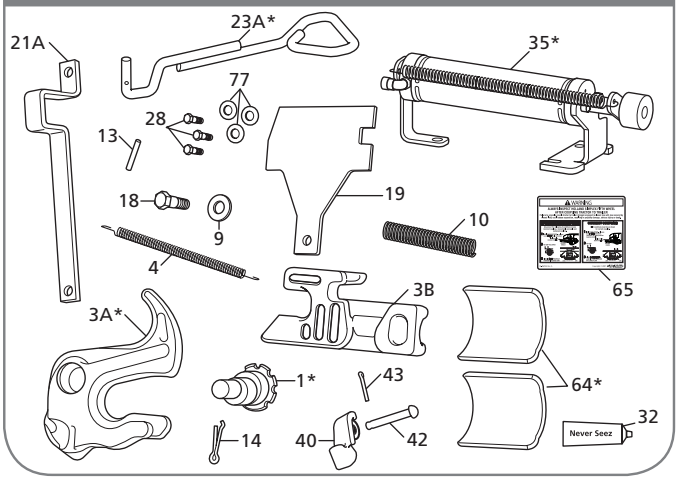

FWS1 KIT PARTS LIST

ITEM	DESCRIPTION	PART NUMBER	QTY.	WEIGHT LBS [KG]
1*	Pin, Eccentric Jaw	XA-10971	1	1.87 [0.85]
3A*	Lock Jaw, See RK-4109939	XA-4109939	1	8.48 [3.85]
3B	Lock	4109931	1	6.58 [2.98]
4	Spring, Jaw Return	1200101	1	0.10 [0.05]
9	Washer, .66" I.D. x 1.31" O.D.	XB-T-199	1	0.03 [0.01]
10	Spring, Lock	1200706	1	0.63 [0.29]
13	Pin, Spring .19" Dia. x 1.15" Long	9900181	1	0.01 [0.005]
14	Pin, Cotter .19" Dia. x 1.25" Long	9900170	1	0.01 [0.005]
18	HHSB, .50"-13 x 1.88" GR 5	XB-11127	1	0.16 [0.07]
19	Cover Plate	XA-10969	1	4.03 [1.83]
21A	Lever Bar, Air Release	XA-11113-P	1	2.63 [1.19]
21L	Lever Bar, Left-Hand	4100373	1	2.69 [1.22]
23A*	Release Handle, Air Release, See RK-11112	XA-11112	1	1.80 [0.82]

FWS1 KIT PARTS LIST

ITEM	DESCRIPTION	PART NUMBER	QTY.	WEIGHT LBS [KG]
23L*	Release Handle, Left-Hand, See RK-10990	XA-10990	1	1.75 [0.79]
26	Pin, Cotter, Dia. .19" x 1.25" Long	XB-11091	1	0.01 [0.005]
27	Washer, .56" I.D. x 1.38" O.D.	XB-T-49	1	0.04 [0.02]
28	HHCS, .38"-16 x .63" GR 5	XB-11089	3	0.04 [0.02]
32	Never-Seez, 7.5g Tube		1	N/A
35	Air Cylinder	XA-10999	1	6.98 [3.17]
40	Lock Indicator	XD-11121	1	0.71 [0.32]
42	Pin, Indicator	XB-10996	1	0.10 [0.04]
43	Pin, Cotter, .13" x 1.25" Long	84261	1	0.01 [0.005]
64*	Pocket Insert, See RK-PKT-2	XD-08908	2	1.72 [0.78]
65	Tag, Warning, Coupling	XL-FW534	1	N/A
77	Washer, .41" I.D. x .81" O.D.	XB-PWM-38-78	3	0.01 [0.005]

*Not sold individually - must be purchased in kit.

 Amendments and errors reserved. © SAF-HOLLAND, Inc.

SAF-HOLLAND Group

RK-FWS-A-14-L
Complete Rebuild with Grease Fittings, Left-Hand Release

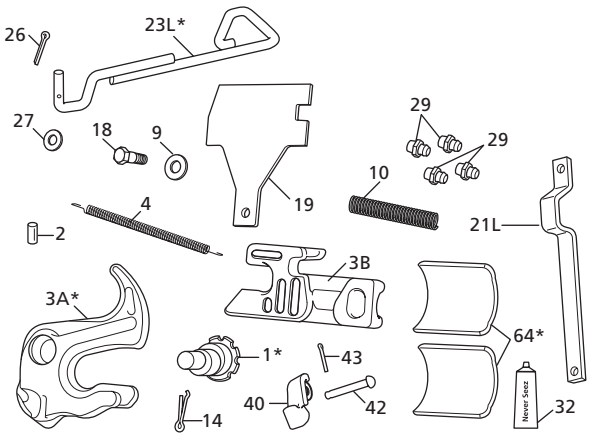

FWS1 KIT PARTS LIST

ITEM	DESCRIPTION	PART NUMBER	QTY.	WEIGHT LBS [KG]
1*	Pin, Eccentric Jaw	XA-10971	1	1.87 [0.85]
2	Pin, Grooved	XB-11025	1	0.03 [0.01]
3A*	Lock Jaw, See RK-4109939	XA-4109939	1	8.48 [3.85]
3B	Lock	4109931	1	6.58 [2.98]
4	Spring, Jaw Return	1200101	1	0.10 [0.05]
9	Washer, .66" I.D. x 1.31" O.D.	XB-T-199	1	0.03 [0.01]
10	Spring, Lock	1200706	1	0.63 [0.29]
14	Pin, Cotter, Dia. .19" x 1.25" Long	9900170	1	0.01 [0.005]
18	HHSB, .50"-13 x 1.88" GR 5	XB-11127	1	0.16 [0.07]
19	Plate, Cover	XA-10969	1	4.03 [1.83]
21L	Lever Bar, Left-Hand	4100373	1	2.69 [1.22]
23L*	Release Handle, Left-Hand, See RK-10990	XA-10990	1	1.75 [0.79]
26	Pin, Cotter, .19" Dia. x 1.25" Long	XB-11091	1	0.01 [0.005]
27	Washer, .56" I.D. x 1.38" O.D.	XB-T-49	1	0.04 [0.02]
29	Grease Zerk	XB-H-38	4	0.01 [0.005]
32	Never-Seez, 7.5g Tube	XB-02967	1	N/A
40	Lock Indicator	XD-11121	1	0.71 [0.32]
42	Pin, Indicator	XB-10996	1	0.10 [0.04]
43	Pin, Cotter, .13" Dia. x 1.25" Long	84261	1	0.01 [0.005]
64*	Pocket Insert, See RK-PKT-2	XD-08908	2	1.72 [0.78]

*Not sold individually - must be purchased in kit.

XL-FW10081PM-en-US Rev D 2016-03-01 Amendments and errors reserved. © SAF-HOLLAND, Inc.

THIS PAGE INTENTIONALLY LEFT BLANK

 Amendments and errors reserved. © SAF-HOLLAND, Inc.

SAF-HOLLAND Group

ILS Style Fifth Wheel Assembly Part Numbers

General Holland prefix indicating complete fifth wheel assembly

SERIES	
S1	FWS1 Series

MOUNTING STYLE	
NO.	DESCRIPTION
Standard Duty Sliders	
A	Outboard (1 pc tie-bar)
B	Inboard (Serrated 3 pc tie-bar)
C	Inboard (Straight 3 pc tie-bar) (DTNA Air Fitting)
F	Outboard (1 pc tie-bar)
H	Inboard (1 pc tie-bar for PACCAR)
J	Outboard (1 pc tie-bar for PACCAR)
Standard Duty Stationaries	
Z	Integrated Plate Mount
Y	Foot Mount
X	Bracket Castings Only (No Angle or Base Plate)
W	Brackets w/4" Vert. Leg Angle
Specialty Mounting Systems	
K	Kompensator
N	No-Tilt

HEIGHT (approx.)	
NO.	DESCRIPTION
6	6" (Stationary only)
7	7"
8	8"
9	9"
0	10"
1	11" (Komp only)
2	12.0" [305] (Komp only)
3	13" (Komp only)

FW S1 X X XX X X XX

TRAVEL	
NO.	DESCRIPTION
00	Stationary
ILS Travel	
12	12"
18	18" (Only H & J) Mounting Style
24	24"
36	36"
48	48"
No-Tilt ILS Travel	
06	6"
18	18"
30	30"
42	42"
Kompensator Travel	
11	11"
17	17"
24	24"
41	41"
54	54"
66	66"

ANGLES	
NO.	DESCRIPTION
No Angle Mounting Systems	
W	Aftermarket Inboard No-Tilt & Komp (Serrated Edge)
X	Outboard Slider ***or*** Inboard Slider w/o Angles ***or*** Stationary w/o Angles
Y	Outboard No-Tilt & Komp
Z	OEM Inboard No-Tilt & Komp (straight edge)
Frame Width for Standard Duty Mounting Angles	
A	33.25"
B	33.38"
C	33.50"
D	33.62"
E	33.75
F	33.88"
G	34.00"
H	34.12"
J	34.25"
K	34.38"
L	34.50"

RELEASE HANDLE	
NO.	DESCRIPTION
L	Left-hand (Road-side)
R	Right-hand (Curb-side)

OPTION CODE*	
NO.	DESCRIPTION
00	No option
02	Manual Secondary Lock
24	Drilled & Tapped for Auto Lube
28	Dolly Release Handle
80	Air Release Top Plate
EL	Electronic Lock Indicator (ELI)
EA	ELI w/ Air Release Top Plate
8E	ELI w/Air Release Top Plate (PACCAR only)

NOTE: There are no "dashes" used for the complete fifthwheel assembly new part number

* Please note that not all options are are available on every top plate. Multiple option combinations are available.

XL-FW10081PM-en-US Rev D 2016-03-01 Amendments and errors reserved. © SAF-HOLLAND, Inc.

FWS1 Stationary Foot Mount

Discontinued - Replacement Parts Only



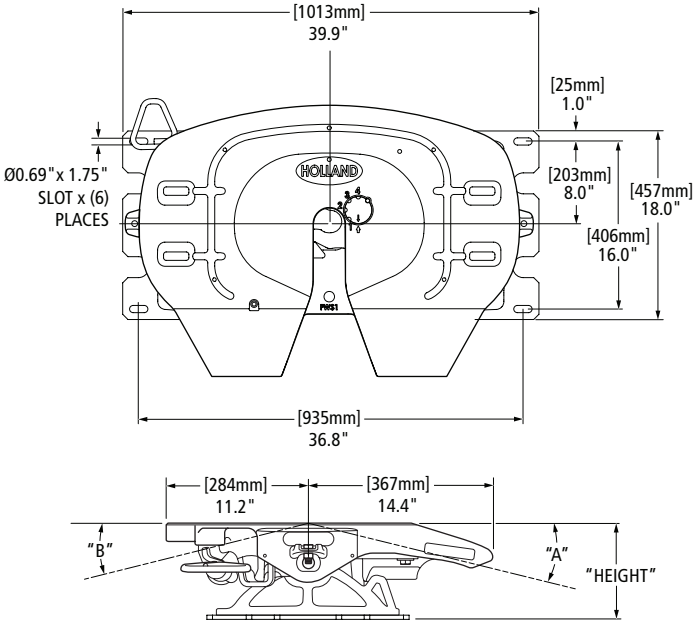

STANDARD OPTION CODES Replaces the Underscore (__) on the part number.			
CODE	DESCRIPTION	CODE	DESCRIPTION
00 / Blank	Standard, No Other Options.	80	Air Release, OEM Replacement, Left-Hand Only
14	Grease Fitting in Top Plate, Four (4) Fittings	86	Air Release, Aftermarket Installations, Left-Hand Only

FW PART NUMBER (CAST BRACKET)◊	HEIGHT IN [MM]	A	B	REPLACEMENT BRACKETS**	FW WEIGHT LBS [KG]
FWS1Y600XL__	6.1" [155]	11°	7°	RK-Y600	292.00 [132.45]
FWS1Y700XL__	7.1" [180]	14°	15°	RK-Y700	298.00 [135.17]
FWS1Y800XL__	8.1" [206]	17°	20°	RK-Y800	303.00 [137.44]
FWS1Y900XL__	9.1" [231]	20°	24°	RK-Y900	308.00 [139.71]

◊ For right-hand release fifth wheels, change "L" to "R" in part number.
** See bracket section for more information.

NOTE: A flat or corrugated mounting plate is required for foot mount brackets.

FWS1 Stationary Integrated Plate Mount

Discontinued - Replacement Parts Only



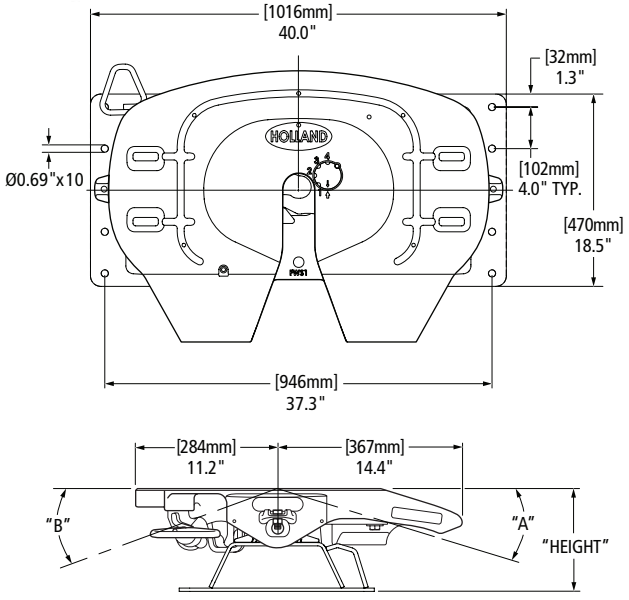

STANDARD OPTION CODES Replaces the Underscore (__) on the part number.			
CODE	DESCRIPTION	CODE	DESCRIPTION
00 / Blank	Standard, No Other Options.	80	Air Release, OEM Replacement, Left-Hand Only
14	Grease Fitting in Top Plate, Four (4) Fittings	86	Air Release, Aftermarket Installations, Left-Hand Only

FW PART NUMBER (CAST BRACKET)◊	HEIGHT IN [MM]	A	B	REPLACEMENT BRACKETS**	FW WEIGHT LBS [KG]
FWS1Z600XL__	6.1" [155]	11°	7°	RK-Z600	309.00 [140.16]
FWS1Z700XL__	7.1" [180]	14°	15°	RK-Z700	317.00 [143.79]
FWS1Z800XL__	8.1" [206]	17°	20°	RK-Z800	324.00 [146.96]
FWS1Z900XL__	9.1" [231]	20°	24°	RK-Z900	320.00 [145.15]

◊ For right-hand release fifth wheels, change "L" to "R" in part number.
** See bracket section for more information.

 Amendments and errors reserved. © SAF-HOLLAND, Inc.

FWS1 Stationary Brackets for Angle Mounting

Also Available With Angle Later In This Section.
Discontinued - Replacement Parts Only



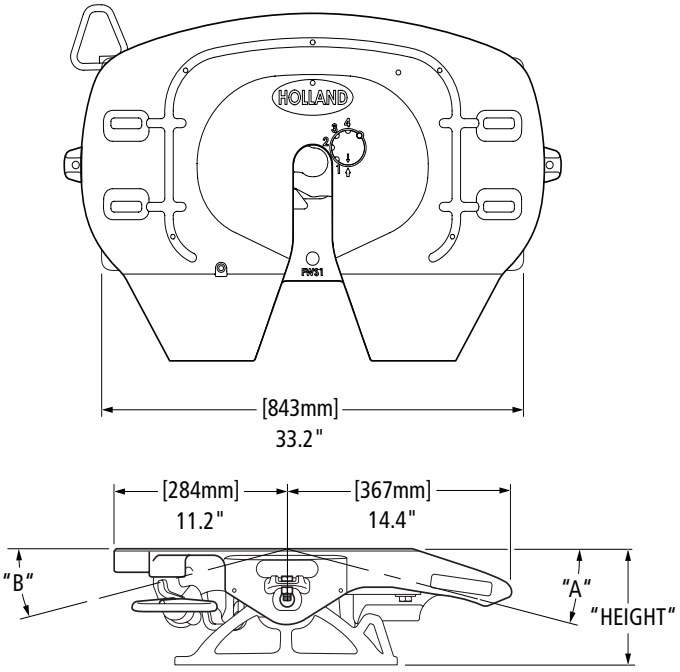

FW PART NUMBER (CAST BRACKET)◊	HEIGHT IN [MM]	A	B	REPLACEMENT BRACKETS**	FW WEIGHT LBS [KG]
FWS1X600XL__	5.8" [147]	11°	7°	RK-X600	263.00 [119.29]
FWS1X700XL__	6.8" [173]	14°	15°	RK-X700	269.00 [122.02]
FWS1X800XL__	7.8" [198]	17°	20°	RK-X800	274.00 [124.28]
FWS1X900XL__	8.8" [224]	20°	24°	RK-X900	279.00 [126.55]

◊ For right-hand release fifth wheels, change "L" to "R" in part number.
** See bracket section for more information.

STANDARD OPTION CODES Replaces the Underscore (__) on the part number.	
NUMBER CODE	DESCRIPTION
00 / Blank	Standard, No Other Options.
14	Grease Fittings in Top Plate, Four (4) Fittings
80	Air Release, OEM Replacement, Left-Hand Only
86	Air Release, New Installations, Left-Hand Only

XL-FW10081PM-en-US Rev D 2016-03-01 Amendments and errors reserved. © SAF-HOLLAND, Inc.

FWS1 Sliding ILS Outboard Mount

Discontinued - Replacement Parts Only



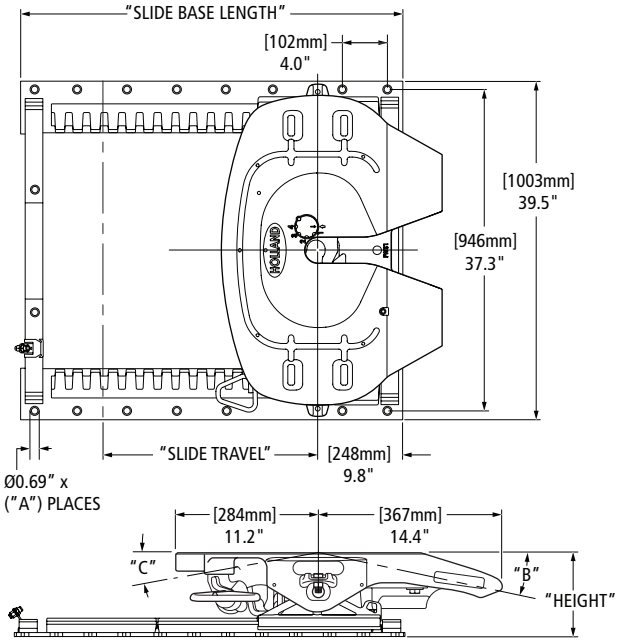

STANDARD OPTION CODES Replaces the Underscore (__) on the part number.	
NUMBER CODE	**DESCRIPTION**
00 / Blank	Standard, No Other Options
80	Air Release, OEM Replacement, Left-Hand Only
86	Air Release, New Installations, Left-Hand Only

ILS FW PART NUMBER◊	HEIGHT IN [MM]	SLIDE TRAVEL IN [MM]	SLIDE BASE LENGTH IN [MM]	A # OF HOLES	B	C	REPLACEMENT SLIDE BASE AND BRACKET**	REPLACEMENT SLIDE BASE**	REPLACEMENT BRACKET**	FW WEIGHT LBS [KG]
FWS1A712XL__	7.1" [180]	12.0" [305]	31.0" [787]	16	11°	6°	XA-A712	XA-A12	RK-10689-1	412.00 [186.88]
FWS1A724XL__		24.0" [610]	43.0" [1092]	22			XA-A724	XA-A24		446.00 [202.30]
FWS1A736XL__		36.0" [914]	55.0" [1397]	28			XA-A736	XA-A36		479.00 [217.27]
FWS1A748XL__		48.0" [1219]	67.0" [1702]	34			XA-A748	XA-A48		513.00 [232.69]
FWS1A812XL__	8.1" [206]	12.0" [305]	31.0" [787]	16	15°	12°	XA-A812	XA-A12	RK-10689-2	415.00 [188.24]
FWS1A824XL__		24.0" [610]	43.0" [1092]	22			XA-A824	XA-A24		448.00 [203.21]
FWS1A836XL__		36.0" [914]	55.0" [1397]	28			XA-A836	XA-A36		482.00 [218.63]
FWS1A848XL__		48.0" [1219]	67.0" [1702]	34			XA-A848	XA-A48		515.00 [233.60]
FWS1A912XL__	9.1" [231]	12.0" [305]	31.0" [787]	16	18°	19°	XA-A912	XA-A12	RK-10689-3	419.00 [190.06]
FWS1A924XL__		24.0" [610	43.0" [1092	22			XA-A924	XA-A24		452.00 [205.02]
FWS1A936XL__		36.0" [914]	55.0" [1397	28			XA-A936	XA-A36		486.00 [220.45]
FWS1A948XL__		48.0" [1219]	67.0" [1702]	34			XA-A948	XA-A48		519.00 [235.41]

◊ For right-hand release fifth wheels, change "L" to "R" in part number.
** See bracket section for more information.

 Amendments and errors reserved. © SAF-HOLLAND, Inc.

FWS1 Sliding ILS Inboard Mount for Angle

Also Available With Angle Later In This Section.

Discontinued - Replacement Parts Only



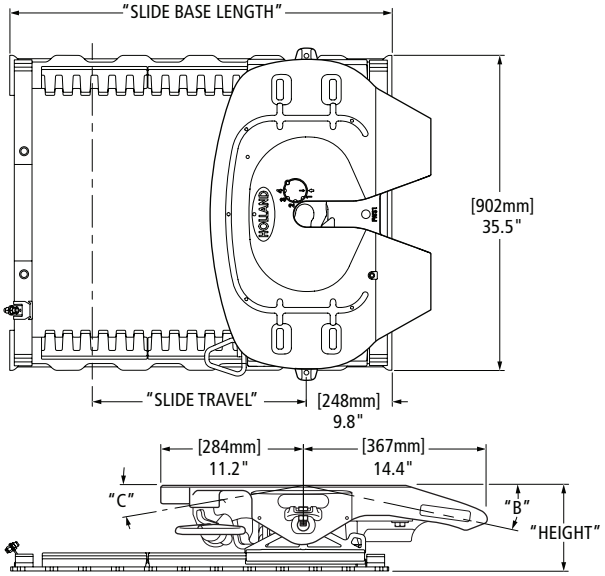

STANDARD OPTION CODES Replaces the Underscore (__) on the part number.	
NUMBER CODE	**DESCRIPTION**
00 / Blank	Standard, No Other Options
14	Grease Fittings in Top Plate, Four (4) Fittings
80	Air Release, OEM Replacement, Left-Hand Only
86	Air Release, New Installations, Left-Hand Only

ILS FW PART NUMBER◊	HEIGHT IN [MM]	SLIDE TRAVEL IN [MM]	SLIDE BASE LENGTH IN [MM]	B	C	REPLACEMENT SLIDE BASE AND BRACKET**	REPLACEMENT SLIDE BASE**	REPLACEMENT BRACKETS**	FW WEIGHT LBS [KG]
FWS1B712XL__	7.1"[180]	12.0" [305]	31.0" [787]	11°	6°	XA-B712	XA-B12	RK-10689-1	396.00 [179.62]
FWS1B724XL__		24.0" [610]	43.0" [1092]			XB-B724	XA-B24		424.00 [192.32]
FWS1B736XL__		36.0" [914]	55.0" [1397]			XA-B736	XA-B36		452.00 [205.02]
FWS1B748XL__		48.0" [1219]	67.0" [1702]			XA-B748	XA-B48		480.00 [217.72]
FWS1B812XL__	8.1"[206]	12.0" [305]	31.0" [787]	15°	12°	XA-B812	XA-B12	RK-10689-2	400.00 [181.44]
FWS1B824XL__		24.0" [610]	43.0" [1092]			XA-B824	XA-B24		428.00 [194.14]
FWS1B836XL__		36.0" [914]	55.0" [1397]			XA-B836	XA-B36		456.00 [206.84]
FWS1B848XL__		48.0" [1219]	67.0" [1702]			XA-B848	XA-B48		484.00 [219.54]
FWS1B912XL__	9.1" [231]	12.0" [305]	31.0" [787]	18°	19°	XA-B912	XA-B12	RK-10689-3	404.00 [183.25]
FWS1B924XL__		24.0" [610]	43.0" [1092]			XA-B924	XA-B24		432.00 [195.95]
FWS1B936XL__		36.0" [914]	55.0" [1397]			XA-B936	XA-B36		460.00 [208.65]
FWS1B948XL__		48.0" [1219]	67.0" [1702]			XA-B948	XA-B48		488.00 [221.35]

XL-FW10081PM-en-US Rev D 2016-03-01 Amendments and errors reserved. © SAF-HOLLAND, Inc.

FWS1 Stationary Brackets with Angle Mount

Discontinued - Replacement Parts Only



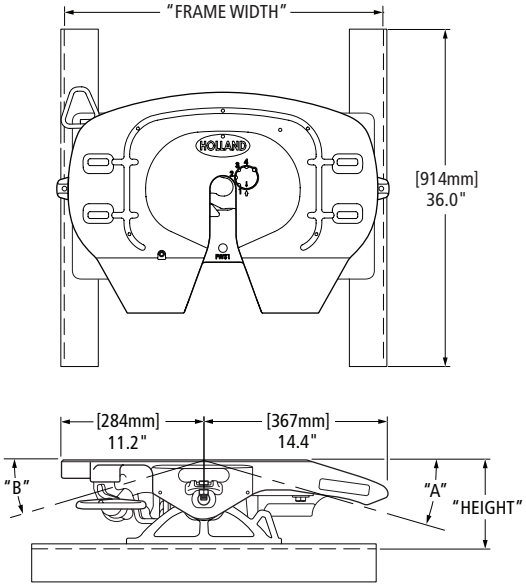

Frame width "A-G": .38" x 4" x 4" angle
"H-N": .38" x 4" x 6" angle
See option chart for other options.

STANDARD OPTION CODES Replaces the Underscore (__) on the part number.	
NUMBER CODE	DESCRIPTION
00 / Blank	Standard, No Other Options
14	Grease Fittings in Top Plate, Four (4) Fittings
80	Air Release, OEM Replacement, Left-Hand Only
86	Air Release, New installations, Left-Hand Only
21	.38" x 5" x 5" Angle
51	.38" x 4" x 6" Angle

FRAME WIDTH CODE CHART					
CODE	FRAME WIDTH IN [MM]	CODE	FRAME WIDTH IN [MM]	CODE	FRAME WIDTH IN [MM]
A	33.25" [845]	F	33.88" [861]	L	34.50" [876]
B	33.38" [848]	**G†**	**34.00" [864]**	M	34.62" [879]
C	33.50" [851]	H	34.12" [867]	N	34.75" [883]
D	33.62" [854]	J	34.25" [870]		
E	33.75" [857]	K	34.38" [873]		

† Standard

FW PART NUMBER CAST BRACKET◊	HEIGHT IN [MM]	A	B	REPLACEMENT BRACKETS**	FW WEIGHT LBS [KG]
FWS1W600GL__	6.1"[155]	11°	7°	RK-W600-G	329.00 [149.23]
FWS1W700GL__	7.1"[180]	14°	15°	RK-W700-G	334.00 [151.50]
FWS1W800GL__	8.1"[206]	17°	20°	RK-W800-G	339.00 [153.77]
FWS1W900GL__	9.1"[231]	20°	24°	RK-W900-G	344.00 [156.04]

◊ For right-hand release fifth wheels, change "L" to "R" in part number.
** See bracket section for more information.

 Amendments and errors reserved. © SAF-HOLLAND, Inc.

FWS1 Sliding ILS Inboard with Angle Mount

Discontinued - Replacement Parts Only

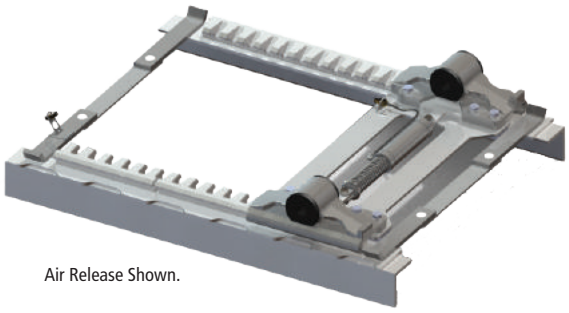

Air Release Shown.

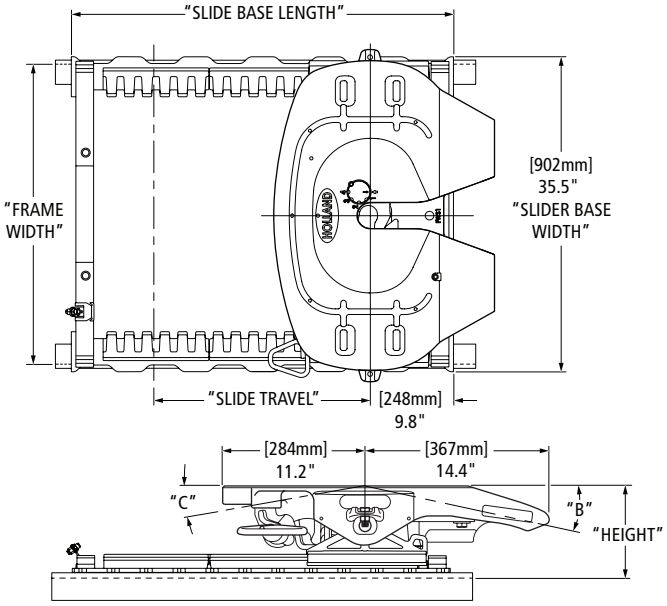

Frame width "A-C": .38" x 3" x 4" angle
"D-K": .38" x 3.5" x 4" angle
"K-Q": .38" x 4" x 4" angle
See option codes for other options.

FRAME WIDTH CODE CHART					
CODE	FRAME WIDTH IN [MM]	CODE	FRAME WIDTH IN [MM]	CODE	FRAME WIDTH IN [MM]
A	33.25" [845]	F	33.88" [861]	L	34.50" [876]
B	33.38" [848]	G†	**34.00" [864]**	M	34.62" [879]
C	33.50" [851]	H	34.12" [867]	N	34.75" [883]
D	33.62" [854]	J	34.25" [870]	P	34.88" [886]
E	33.75" [857]	K	34.38" [873]	Q	35.00" [889]

STANDARD OPTION CODES Replaces the Underscore (__) on the part number.	
NUMBER CODE	DESCRIPTION
00 / Blank	Standard, No Other Option
14	Grease Fittings in Top Plate, Four (4) Fittings
21	.38" x 5" x 5" Angle
51	.38" x 4" x 6" Angle
65	.31" x 4" x 4" x Angle
80	Air Release, OEM Replacement, Left-Hand Only
86	Air Release, Aftermarket Installations, Air Control Modules Included, Left-Hand Only

FW PART NUMBER◊	HEIGHT IN [MM]	SLIDE TRAVEL IN [MM]	SLIDE BASE LENGTH	B	C	REPLACEMENT SLIDE BASE AND BRACKET**	REPLACEMENT SLIDE BASE **	REPLACEMENT BRACKET**	FW WEIGHT LBS [KG]
FWS1B712GL__	7.5" [191]	12.0" [305]	31.0" [787]	11°	6°	XA-B712G	XA-B12G	RK-10689-1	448.00 [203.21]
FWS1B724GL__		24.0" [610]	43.0" [1092]			XA-B724G	XA-B24G	RK-10689-1	494.00 [224.07]
FWS1B736GL__		36.0" [914]	55.0" [1397]			XA-B736G	XA-B36G	RK-10689-1	540.00 [244.94]
FWS1B748GL__		48.0" [1219]	67.0" [1702]			XA-B748G	XA-B48G	RK-10689-1	586.00 [265.81]
FWS1B812GL__	8.5" [216]	12.0" [305]	31.0" [787]	15°	12°	XA-B812G	XA-B12G	RK-10689-2	453.00 [205.48]
FWS1B824GL__		24.0" [610]	43.0" [1092]			XA-B824G	XA-B24G	RK-10689-2	499.00 [226.34]
FWS1B836GL__		36.0" [914]	55.0" [1397]			XA-B836G	XA-B36G	RK-10689-2	545.00 [247.21]
FWS1B848GL__		48.0" [1219]	67.0" [1702]			XA-B848G	XA-B48G	RK-10689-2	591.00 [268.07]
FWS1B912GL__	9.5" [241]	12.0" [305]	31.0" [787]	18°	19°	XA-B912G	XA-B12G	RK-10689-3	457.00 [207.29]
FWS1B924GL__		24.0" [610]	43.0" [1092]			XA-B924G	XA-B24G	RK-10689-3	503.00 [228.16]
FWS1B936GL__		36.0" [914]	55.0" [1397]			XA-B936G	XA-B36G	RK-10689-3	549.00 [249.02]
FWS1B948GL__		48.0" [1219]	67.0" [1702]			XA-B948G	XA-B48G	RK-10689-3	595.00 [269.89]

◊ For right-hand release fifth wheels, change "L" to "R" in part number.
** See bracket section for more information.

XL-FW10081PM-en-US Rev D 2016-03-01 Amendments and errors reserved. © SAF-HOLLAND, Inc.

THIS PAGE INTENTIONALLY LEFT BLANK

 Amendments and errors reserved. © SAF-HOLLAND, Inc.

Discontinued - Replacement Parts Only

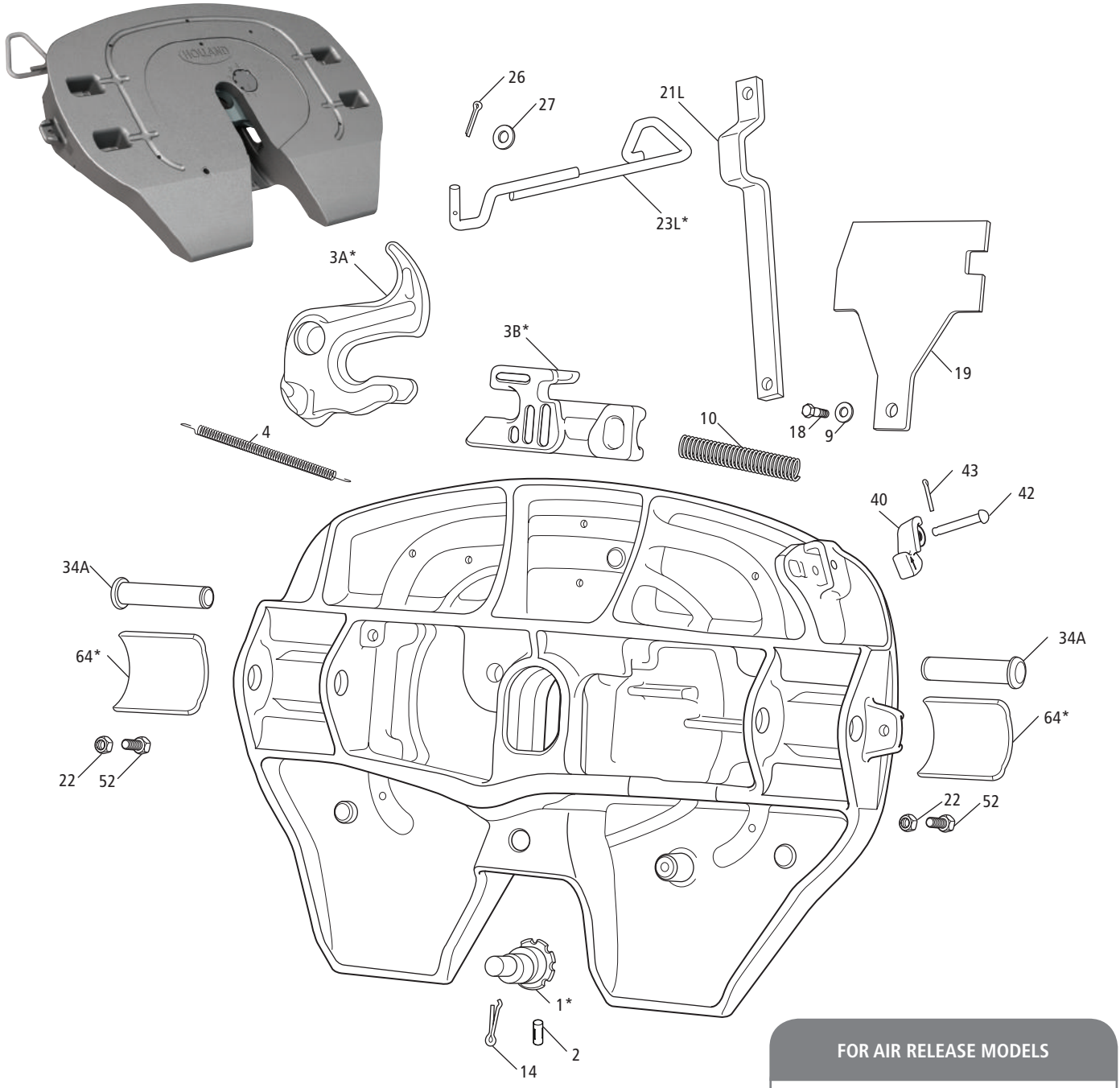

FOR AIR RELEASE MODELS

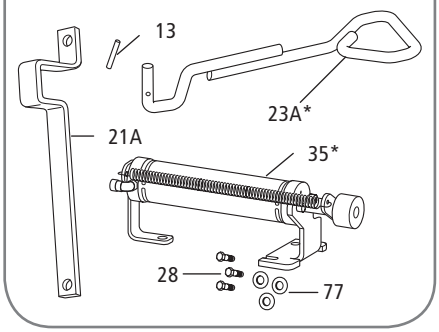

XL-FW10081PM-en-US Rev D 2016-03-01 Amendments and errors reserved. © SAF-HOLLAND, Inc.

FWS2 PARTS LIST

ITEM	DESCRIPTION	PART NUMBER	QTY.	WEIGHT LBS [KG]
1*	Eccentric Jaw Pin, See RK-4109939	XA-10971	1	1.87 [0.85]
2	Pin, Grooved	XB-11025	1	0.03 [0.01]
3A*	Lock Jaw, Left-Hand See RK-4109939	XA-4109939	1	8.48 [3.85]
3B*	Lock, Left Hand	4109931	1	6.58 [2.98]
4	Spring, Jaw Return	1200101	1	0.10 [0.05]
9	Washer, .66" I.D. x 1.31" O.D.	XB-T-199	1	0.03 [0.01]
10	Spring, Lock	1200706	1	0.63 [0.29]
13	Pin, Spring, .19" Dia. x 1.15" Long	9900181	1	0.01 [0.005]
14	Pin, Cotter, .19" Dia. x 1.25" Long	9900170	1	0.01 [0.005]
18	HHSB, .50"-13 x 1.88" GR 5"	XB-11127	1	0.16 [0.07]
19	Plate, Cover	XA-10969	1	4.03 [1.83]
21A	Lever Bar, Air Release	XA-11113-P	1	2.63 [1.19]
21L	Lever Bar, Left-Hand	4100373	1	2.69 [1.22]
22	Lock Nut, .50"-20 GR C	XB-T-69-A	2	0.04 [0.02]
23A*	Release Handle, Air Release, See RK-11112	XA-11112	1	1.80 [0.82]
23L*	Release Handle, Left-Hand, See RK-10990	XA-10990	1	1.75 [0.79]
26	Pin, Cotter, .19" Dia. x 1.25"Long	XB-11091	1	0.01 [0.005]
27	Washer, .56" I.D. x 1.38" O.D.	XB-T-49	1	0.04 [0.02]
28	HHCS, .38"-16 x .63" GR 5"	XB-11089	3	0.04 [0.02]
34A	Pin, Bracket	XE-06356-P	2	1.98 [0.90]
35*	Cylinder Assembly, Air, See RK-10999	XA-10999	1	6.98 [3.17]
40	Lock Indicator	XD-11121	1	0.71 [0.32]
42	Pin, Indicator	XB-10996	1	0.10 [0.04]
43	Pin, Cotter, .13" Dia.x 1.25" Long	84261	1	0.01 [0.005]
52	HHCS, .50"-20 x 1.25" GR 5	XB-C-95	2	0.11 [0.05]
64*	Pocket Insert, See RK-PKT-2	XD-08908	2	1.72 [0.78]
77	Washer, .41" I.D. x .81" O.D.	XB-PWM-38-78	3	0.01 [0.005]

*Not sold individually - must be purchased in kit.

NOTE: See Accessories Section for Air Release Kits.

REPLACEMENT TOP PLATE PART NUMBERS

PART NUMBER	DESCRIPTION
XA-S2-A-L-P	Left-Hand Release with Pins
XA-S2-A-80-L-P	Air Release with Pins
XA-S2-A-14-L-P	Left-Hand Release with Grease Fittings and Pins

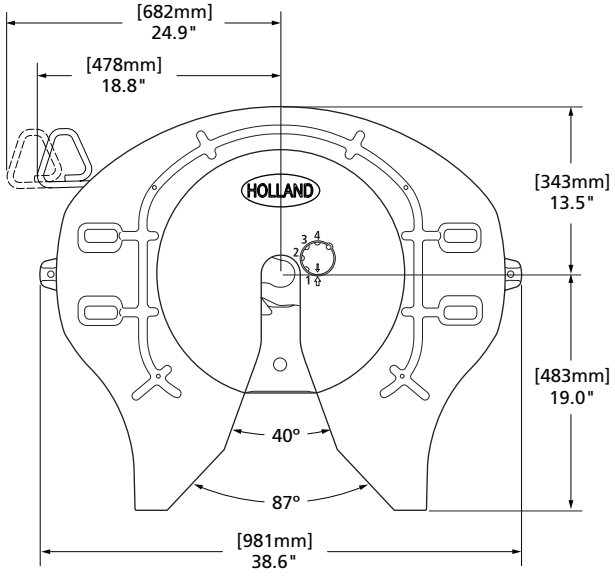

For XA-S2 fifth wheel rebuild procedures, see Holland publication XL-FW546 at www.safholland.us

 Amendments and errors reserved. © SAF-HOLLAND, Inc.

FWS2 Replacement Kits

SAF-HOLLAND Group

RK-PKT-2
Pocket Inserts

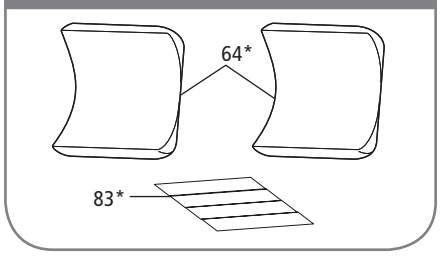

RK-10999
Air Cylinder

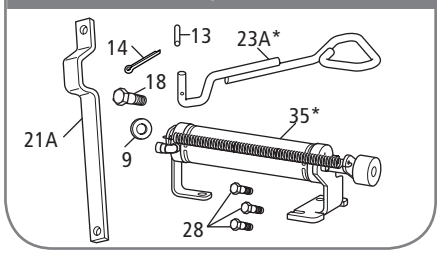

RK-4109939
Lock, Standard

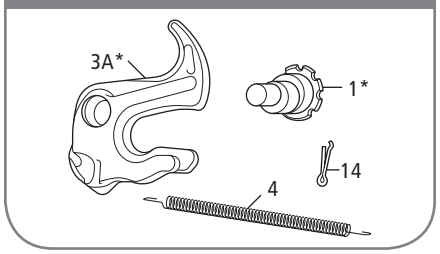

RK-10990
Release Handle, Left-Hand

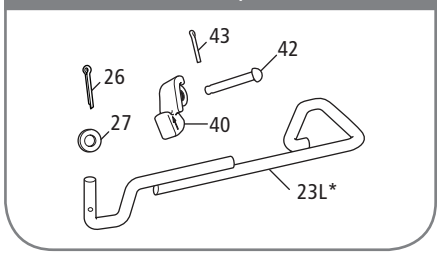

RK-11112
Release Handle, Air Release

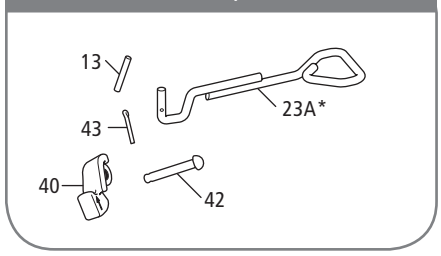

RK-06973-1
Bracket Pins and Cushions

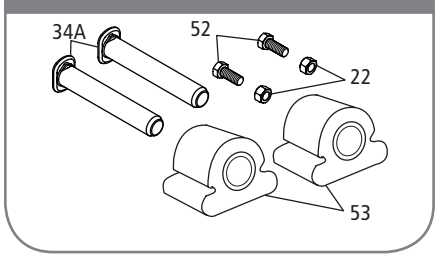

RK-10605
Bracket Pins and Bushings, ILS

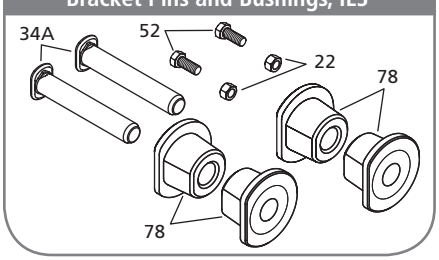

FWS2 KIT PARTS LIST

ITEM	DESCRIPTION	PART NUMBER	QTY.	WEIGHT LBS [KG]
1*	Pin, Eccentric Jaw	XA-10971	1	1.87 [0.85]
3A*	Lock Jaw	XA-4109939	1	8.48 [3.85]
4	Spring, Jaw Return	1200101	1	0.10 [0.05]
9	Washer, .66" I.D. x 1.31" O.D.	XB-T-199	1	0.03 [0.01]
13	Pin, Spring, .19" Dia. x 1.15" Long	9900181	1	0.01 [0.005]
14	Pin, Cotter, .19" Dia. x 1.25" Long	9900170	1	0.01 [0.005]
18	HHSB, .50"-13 x 1.88" GR 5	XB-11127	1	0.16 [0.07]
21A	Lever Bar, Air Release	XA-11113-P	1	2.63 [1.19]
22	Lock Nut, .50"-20	XB-T-69-A	2	0.04 [0.02]
23A*	Release Handle, Air Release	XA-11112	1	1.80 [0.82]
23L*	Release Handle, Left-Hand	XA-10990	1	1.75 [0.79]
26	Pin, Cotter, .19" Dia. x 1.25" Long	XB-11091	1	0.01 [0.005]

FWS2 KIT PARTS LIST

ITEM	DESCRIPTION	PART NUMBER	QTY.	WEIGHT LBS [KG]
27	Washer, .56" I.D. x 1.38" O.D.	XB-T-49	1	0.04 [0.02]
28	HHCS, .38"-16 x .63" GR 5	XB-11089	3	0.04 [0.02]
34A	Pin, Bracket	XE-06356-P	2	1.98 [0.90]
35*	Air Cylinder	XA-10999	1	6.98 [3.17]
40	Lock Indicator	XD-11121	1	0.71 [0.32]
42	Pin, Indicator	XB-10996	1	0.10 [0.04]
43	Pin, Cotter, .13" Dia. x 1.25" Long	84261	1	0.01 [0.005]
52	HHCS, .50"-20 x 1.25"	XB-C-95	2	0.11 [0.05]
53	Cushion, Rubber	XB-0011-2	2	0.60 [0.27]
64*	Pocket Insert	XD-08908	2	1.72 [0.78]
78	Cushions, Rubber, ILS	XB-10605	4	0.39 [0.18]
83*	Tape, Double Face	XB-09422	4	0.01 [0.005]

*Not sold individually - must be purchased in kit.

XL-FW100081PM-en-US Rev D 2016-03-01 Amendments and errors reserved. © SAF-HOLLAND, Inc.

RK-FWS-A-L
Complete Rebuild, Left-Hand Release

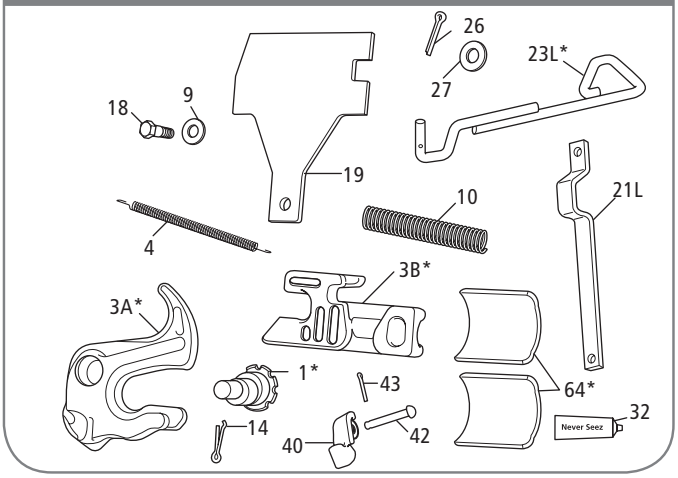

RK-FWS-A-80-L
Complete Rebuild, Air Release

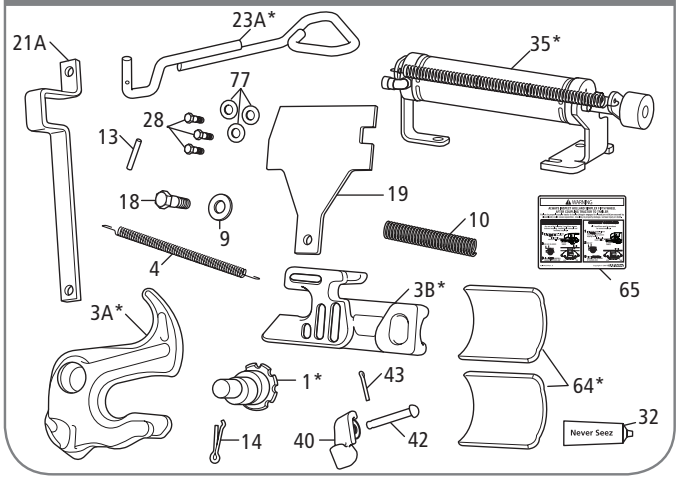

FWS2 KIT PARTS LIST

ITEM	DESCRIPTION	PART NUMBER	QTY.	WEIGHT LBS [KG]
1*	Pin, Eccentric Jaw	XA-10971	1	1.87 [0.85]
3A*	Lock Jaw, See RK-4109939	XA-4109939	1	8.48 [3.85]
3B*	Lock, See RK-4109931	4109931	1	6.58 [2.98]
4	Spring, Jaw Return	1200101	1	0.10 [0.05]
9	Washer, .66" I.D. x 1.31" O.D.	XB-T-199	1	0.03 [0.01]
10	Spring, Lock	1200706	1	0.63 [0.29]
13	Pin, Spring .19" Dia. x 1.15" Long	9900181	1	0.01 [0.005]
14	Pin, Cotter .19" Dia. x 1.25" Long	9900170	1	0.01 [0.005]
18	HHSB, .50"-13 x 1.88" GR 5	XB-11127	1	0.16 [0.07]
19	Cover Plate	XA-10969	1	4.03 [1.83]
21A	Lever Bar, Air Release	XA-11113-P	1	2.63 [1.19]
21L	Lever Bar, Left-Hand	4100373	1	2.69 [1.22]
23A*	Release Handle, Air Release, See RK-11112	XA-11112	1	1.80 [0.82]

FWS2 KIT PARTS LIST

ITEM	DESCRIPTION	PART NUMBER	QTY.	WEIGHT LBS [KG]
23L*	Release Handle, Left-Hand, See RK-10990	XA-10990	1	1.75 [0.79]
26	Pin, Cotter, Dia. .19" x 1.25" Long	XB-11091	1	0.01 [0.005]
27	Washer, .56" I.D. x 1.38" O.D.	XB-T-49	1	0.04 [0.02]
28	HHCS, .38"-16 x .63" GR 5	XB-11089	3	0.04 [0.02]
32	Never-Seez, 7.5g Tube	XB-02967	1	N/A
35*	Air Cylinder	XA-10999	1	6.98 [3.17]
40	Lock Indicator	XD-11121	1	0.71 [0.32]
42	Pin, Indicator	XB-10996	1	0.10 [0.04]
43	Pin, Cotter, .13" x 1.25" Long	84261	1	0.01 [0.005]
64*	Pocket Insert, See RK-PKT-2	XD-08908	2	1.72 [0.78]
65	Tag, Warning, Coupling	XL-FW534	1	N/A
77	Washer, .41" I.D. x .81" O.D.	XB-PWM-38-78	3	0.01 [0.005]

*Not sold individually - must be purchased in kit.

 Amendments and errors reserved. © SAF-HOLLAND, Inc.

SAF-HOLLAND Group

RK-FWS-A-14-L
Complete Rebuild with Grease Fittings, Left-Hand Release

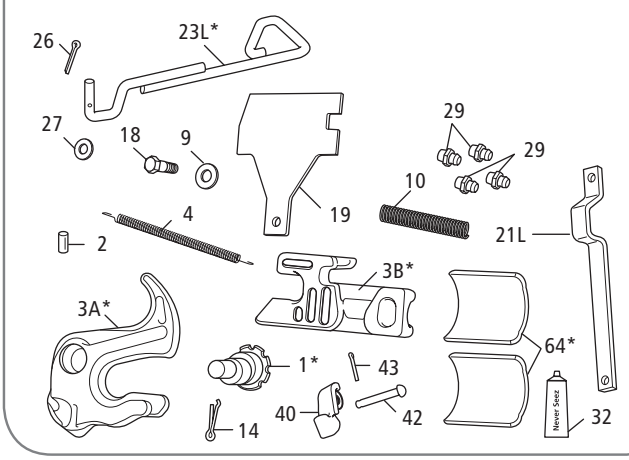

FWS2 KIT PARTS LIST

ITEM	DESCRIPTION	PART NUMBER	QTY.	WEIGHT LBS [KG]
1*	Pin, Eccentric Jaw	XA-10971	1	1.87 [0.85]
2	Pin, Grooved	XB-11025	1	0.03 [0.01]
3A*	Lock Jaw, See RK-4109939	XA-4109939	1	8.48 [3.85]
3B*	Lock, See RK-4109931	4109931	1	6.58 [2.98]
4	Spring, Jaw Return	1200101	1	0.10 [0.05]
9	Washer, .66" I.D. x 1.31" O.D.	XB-T-199	1	0.03 [0.01]
10	Spring, Lock	1200706	1	0.63 [0.29]
14	Pin, Cotter, Dia. .19" x 1.25" Long	9900170	1	0.01 [0.005]
18	HHSB, .50"-13 x 1.88" GR 5	XB-11127	1	0.16 [0.07]
19	Plate, Cover	XA-10969	1	4.03 [1.83]
21L	Lever Bar, Left-Hand	4100373	1	2.69 [1.22]
23L*	Release Handle, Left-Hand, See RK-10990	XA-10990	1	1.75 [0.79]
26	Pin, Cotter, .19" Dia. x 1.25" Long	XB-11091	1	0.01 [0.005]
27	Washer, .56" I.D. x 1.38" O.D.	XB-T-49	1	0.04 [0.02]
29	Grease Zerk	XB-H-38	4	0.01 [0.005]
32	Never-Seez, 7.5g Tube	XB-02967	1	N/A
40	Lock Indicator	XD-11121	1	0.71 [0.32]
42	Pin, Indicator	XB-10996	1	0.10 [0.04]
43	Pin, Cotter, .13" Dia. x 1.25" Long	84261	1	0.01 [0.005]
64*	Pocket Insert, See RK-PKT-2	XD-08908	2	1.72 [0.78]

*Not sold individually - must be purchased in kit.

XL-FW10081PM-en-US Rev D 2016-03-01 Amendments and errors reserved. © SAF-HOLLAND, Inc.

THIS PAGE INTENTIONALLY LEFT BLANK

 Amendments and errors reserved. © SAF-HOLLAND, Inc.

SAF-HOLLAND Group

ILS Style Fifth Wheel Assembly Part Numbers

General Holland prefix indicating complete fifth wheel assembly

SERIES	
S2	FWS2 Series

MOUNTING STYLE	
NO.	DESCRIPTION
Standard Duty Sliders	
A	Outboard (1 pc tie-bar)
B	Inboard (Serrated 3 pc tie-bar)
C	Inboard (Straight 3 pc tie-bar) (DTNA Air Fitting)
F	Outboard (1 pc tie-bar)
H	Inboard (1 pc tie-bar for PACCAR)
J	Outboard (1 pc tie-bar for PACCAR)
Standard Duty Stationaries	
Z	Integrated Plate Mount
Y	Foot Mount
X	Bracket Castings Only (No Angle or Base Plate)
W	Brackets w/4" Vert. Leg Angle
Specialty Mounting Systems	
K	Kompensator
N	No-Tilt

HEIGHT (approx.)	
NO.	DESCRIPTION
6	6" (Stationary only)
7	7"
8	8"
9	9"
0	10"
1	11" (Komp only)
2	12.0" [305] (Komp only)
3	13" (Komp only)

FW S2 X X X X X X X X

TRAVEL	
NO.	DESCRIPTION
00	Stationary
ILS Travel	
12	12"
18	18" (Only H & J) Mounting Style
24	24"
36	36"
48	48"
No-Tilt ILS Travel	
06	6"
18	18"
30	30"
42	42"
Kompensator Travel	
11	11"
17	17"
24	24"
41	41"
54	54"
66	66"

ANGLES	
NO.	DESCRIPTION
No Angle Mounting Systems	
W	Aftermarket Inboard No-Tilt & Komp (Serrated Edge)
X	Outboard Slider ***or*** Inboard Slider w/o Angles ***or*** Stationary w/o Angles
Y	Outboard No-Tilt & Komp
Z	OEM Inboard No-Tilt & Komp (straight edge)
Frame Width for Standard Duty Mounting Angles	
A	33.25"
B	33.38"
C	33.50"
D	33.62"
E	33.75
F	33.88"
G	34.00"
H	34.12"
J	34.25"
K	34.38"
L	34.50"

RELEASE HANDLE	
NO.	DESCRIPTION
L	Left-hand (Road-side)
R	Right-hand (Curb-side)

OPTION CODE*	
NO.	DESCRIPTION
00	No option
02	Manual Secondary Lock
24	Drilled & Tapped for Auto Lube
28	Dolly Release Handle
80	Air Release Top Plate
EL	Electronic Lock Indicator (ELI)
EA	ELI w/ Air Release Top Plate
8E	ELI w/Air Release Top Plate (PACCAR only)

NOTE: There are no "dashes" used for the complete fifthwheel assembly new part number

* Please note that not all options are are available on every top plate. Multiple option combinations are available.

XL-FW10081PM-en-US Rev D 2016-03-01 Amendments and errors reserved. © SAF-HOLLAND, Inc.

FWS2 Stationary Foot Mount

Discontinued - Replacement Parts Only



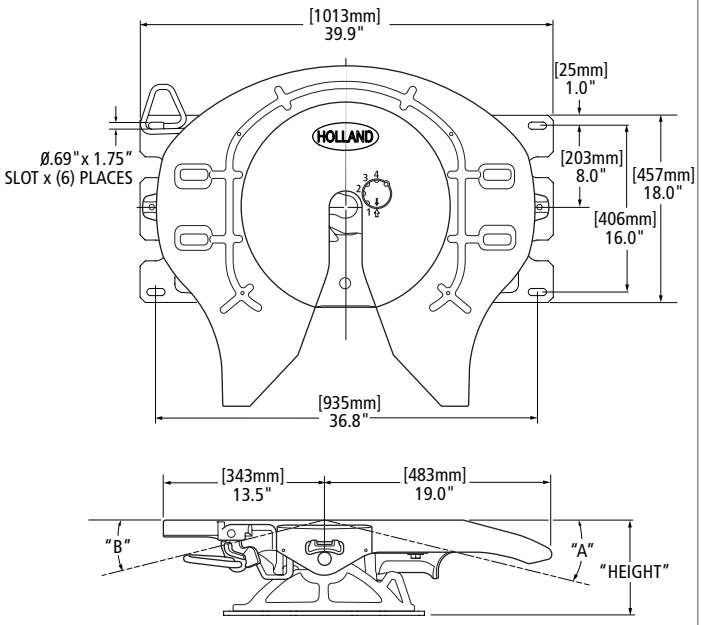

STANDARD OPTION CODES REPLACES THE UNDERSCORE (__) ON THE PART NUMBER.			
CODE	DESCRIPTION	CODE	DESCRIPTION
00 / Blank	Standard, No Other Options.	80	Air Release, OEM Replacement, Left-Hand Only
14	Grease Fitting in Top Plate, Four (4) Fittings	86	Air Release, Aftermarket Installations, Left-Hand Only

FW PART NUMBER (CAST BRACKET)◊*	HEIGHT IN [MM]	A	B	REPLACEMENT BRACKETS**	FIFTH WHEEL WEIGHT LBS [KG]
FWS2Y600XL__	6.1"[155]	8°	10°	RK-Y600	314.00 [142.43]
FWS2Y700XL__	7.1"[180]	11°	15°	RK-Y700	320.00 [145.15]
FWS2Y800XL__	8.1"[206]	14°	19°	RK-Y800	325.00 [147.42]
FWS2Y900XL__	9.1"[231]	17°	24°	RK-Y900	330.00 [149.69]

◊ For right-hand release fifth wheels, change "L" to "R" in part number.
* No longer available
** See bracket section for more information.

NOTE: A flat or corrugated mounting plate is required for foot mount brackets.

FWS2 Stationary Integrated Plate Mount

Discontinued - Replacement Parts Only



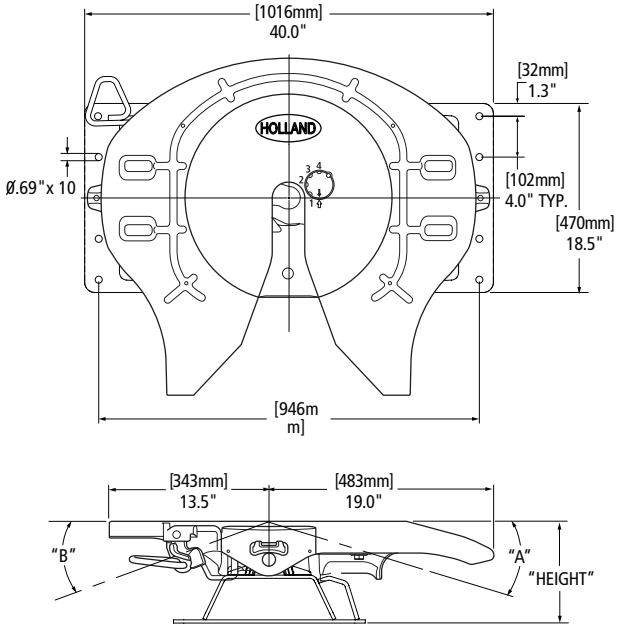

STANDARD OPTION CODES REPLACES THE UNDERSCORE (__) ON THE PART NUMBER.			
CODE	DESCRIPTION	CODE	DESCRIPTION
00 / Blank	Standard, No Other Options.	80	Air Release, OEM Replacement, Left-Hand Only
14	Grease Fitting in Top Plate, Four (4) Fittings	86	Air Release, Aftermarket Installations, Left-Hand Only

FW PART NUMBER (CAST BRACKET)◊*	HEIGHT IN [MM]	A	B	REPLACEMENT BRACKETS**	FIFTH WHEEL WEIGHT LBS [KG]
FWS2Z600XL__	6.1"[155]	8°	10°	RK-Z600	324.00 [146.96]
FWS2Z700XL__	7.1"[180]	11°	15°	RK-Z700	332.00 [150.59]
FWS2Z800XL__	8.1"[206]	14°	19°	RK-Z800	339.00 [153.77]
FWS2Z900XL__	9.1"[231]	17°	24°	RK-Z900	335.00 [151.95]

◊ For right-hand release fifth wheels, change "L" to "R" in part number.
* No longer available
** See bracket section for more information.

 Amendments and errors reserved. © SAF-HOLLAND, Inc.

FWS2 Stationary Brackets for Angle Mounting

Also Available With Angle Later In This Section.
Discontinued - Replacement Parts Only



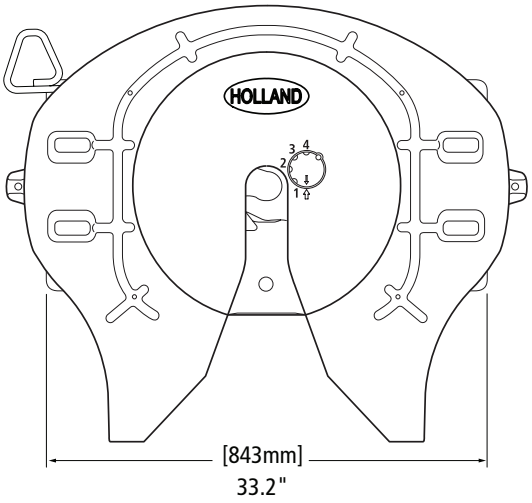

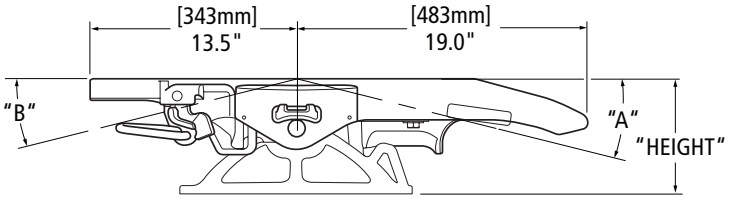

FW PART NUMBER (CAST BRACKET)◊*	HEIGHT IN [MM]	A	B	REPLACEMENT BRACKETS**	FIFTH WHEEL WEIGHT LBS [KG]
FWS2X600XL__	5.8" [147]	8°	10°	RK-X600	285.00 [129.27]
FWS2X700XL__	6.8" [173]	11°	15°	RK-X700	291.00 [132.00]
FWS2X800XL__	7.8" [198]	14°	19°	RK-X800	296.00 [134.26]
FWS2X900XL__	8.8" [224]	17°	24°	RK-X900	301.00 [136.53]

◊ For right-hand release fifth wheels, change "L" to "R" in part number.
* No longer available.
** See bracket section for more information.

STANDARD OPTION CODES REPLACES THE UNDERSCORE (__) ON THE PART NUMBER.	
NUMBER CODE	DESCRIPTION
00 / Blank	Standard, No Other Options.
14	Grease Fittings in Top Plate, Four (4) Fittings
80	Air Release, OEM Replacement, Left-Hand Only
86	Air Release, New Installations, Left-Hand Only

XL-FW10081PM-en-US Rev D 2016-03-01 Amendments and errors reserved. © SAF-HOLLAND, Inc.

FWS2 Sliding ILS Outboard Mount

Discontinued - Replacement Parts Only



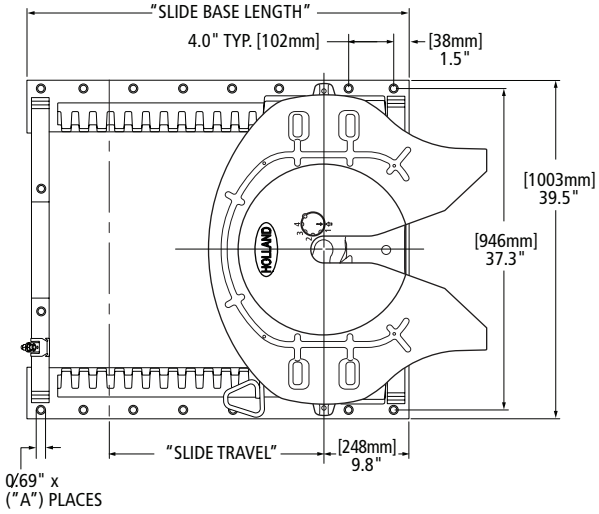

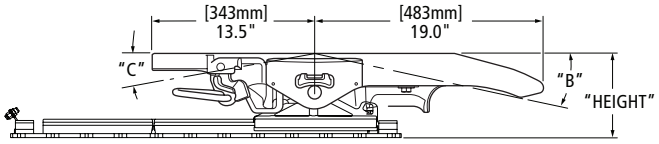

STANDARD OPTION CODES REPLACES THE UNDERSCORE (__) ON THE PART NUMBER.	
NUMBER CODE	**DESCRIPTION**
00 / Blank	Standard, No Other Options
14	Grease Fittings in Top Plate, Four (4) Fittings
80	Air Release, OEM Replacement, Left-Hand Only
86	Air Release, New Installations, Left-Hand Only

ILS FW PART NUMBER◊*	HEIGHT IN [MM]	SLIDE TRAVEL IN [MM]	SLIDE BASE LENGTH IN [MM]	A # OF HOLES	B	C	REPLACEMENT SLIDE BASE AND BRACKET**	REPLACEMENT SLIDE BASE**	REPLACEMENT BRACKET**	FIFTH WHEEL WEIGHT LBS [KG}
FWS2A712XL__	7.1"[180]	12.0" [305]	31.0" [787]	16	8°	6°	XA-A712	XA-A12	RK-10689-1	425.00 [192.78]
FWS2A724XL__		24.0" [610]	43.0" [1092]	22			XA-A724	XA-A24		459.00 [208.20]
FWS2A736XL__		36.0" [914]	55.0" [1397]	28			XA-A736	XA-A36		492.00 [223.17]
FWS2A748XL__		48.0" [1219]	67.0" [1702]	34			XA-A748	XA-A48		526.00 [238.59]
FWS2A812XL__	8.1"[206]	12.0" [305]	31.0" [787]	16	12°	12°	XA-A812	XA-A12	RK-10689-2	432.00 [195.95]
FWS2A824XL__		24.0" [610]	43.0" [1092]	22			XA-A824	XA-A24		466.00 [211.37]
FWS2A836XL__		36.0" [914]	55.0" [1397]	28			XA-A836	XA-A36		499.00 [226.34]
FWS2A848XL__		48.0" [1219]	67.0" [1702]	34			XA-A848	XA-A48		533.00 [241.76]
FWS2A912XL__	9.1" [231]	12.0" [305]	31.0" [787]	16	15°	19°	XA-A912	XA-A12	RK-10689-3	436.00 [197.77]
FWS2A924XL__		24.0" [610]	43.0" [1092]	22			XA-A924	XA-A24		470.00 [213.19]
FWS2A936XL__		36.0" [914]	55.0" [1397]	28			XA-A936	XA-A36		503.00 [228.16]
FWS2A948XL__		48.0" [1219]	67.0" [1702]	34			XA-A948	XA-A48		537.00 [243.58]

◊ For right-hand release fifth wheels, change "L" to "R" in part number.
* No longer available.
** See bracket section for more information.

 Amendments and errors reserved. © SAF-HOLLAND, Inc.

SAF-HOLLAND Group

FWS2 Sliding ILS Inboard Mount for Angle

Also Available With Angle Later In This Section.
Discontinued - Replacement Parts Only



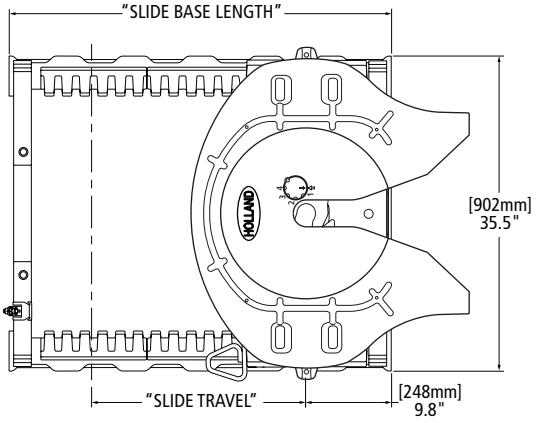

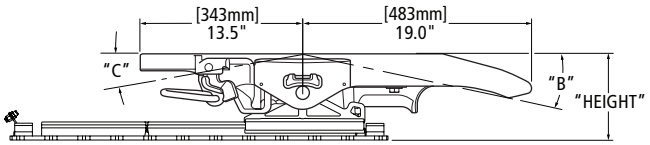

STANDARD OPTION CODES REPLACES THE UNDERSCORE (__) ON THE PART NUMBER.	
NUMBER CODE	**DESCRIPTION**
00 / Blank	Standard, No Other Options
14	Grease Fittings in Top Plate, Four (4) Fittings
80	Air Release, OEM Replacement, Left-Hand Only
86	Air Release, New Installations, Left-Hand Only

ILS FW PART NUMBER◊*	HEIGHT IN [MM]	SLIDE TRAVEL IN [MM]	SLIDE BASE LENGTH	B	C	REPLACEMENT SLIDE BASE AND BRACKET**	REPLACEMENT SLIDE BASE**	REPLACEMENT BRACKETS**	FIFTH WHEEL WEIGHT LBS [KG]
FWS2B712XL__	7.1"[180]	12.0" [305]	31.0" [787]	8°	6°	XA-B712	XA-B12	RK-10689-1	411.00 [186.43]
FWS2B724XL__		24.0" [610]	43.0" [1092]			XB-B724	XA-B24		439.00 [199.13]
FWS2B736XL__		36.0" [914]	55.0" [1397]			XA-B736	XA-B36		467.00 [211.83]
FWS2B748XL__		48.0" [1219]	67.0" [1702]			XA-B748	XA-B48		495.00 [224.53]
FWS2B812XL__	8.1"[206]	12.0" [305]	31.0" [787]	12°	12°	XA-B812	XA-B12	RK-10689-2	416.00 [188.69]
FWS2B824XL__		24.0" [610]	43.0" [1092]			XA-B824	XA-B24		444.00 [201.40]
FWS2B836XL__		36.0" [914]	55.0" [1397]			XA-B836	XA-B36		472.00 [214.10]
FWS2B848XL__		48.0" [1219]	67.0" [1702]			XA-B848	XA-B48		500.00 [226.80]
FWS2B912XL__	9.1"[231]	12.0" [305]	31.0" [787]	15°	19°	XA-B912	XA-B12	RK-10689-3	420.00 [190.51]
FWS2B924XL__		24.0" [610]	43.0" [1092]			XA-B924	XA-B24		448.00 [203.21]
FWS2B936XL__		36.0" [914]	55.0" [1397]			XA-B936	XA-B36		476.00 [215.91]
FWS2B948XL__		48.0" [1219]	67.0" [1702]			XA-B948	XA-B48		504.00 [228.61]

◊ For right-hand release fifth wheels, change "L" to "R" in part number.
* No longer available.
** See bracket section for more information.

XL-FW10081PM-en-US Rev D 2016-03-01 Amendments and errors reserved. © SAF-HOLLAND, Inc.

FWS2 Stationary Brackets with Angle Mount

Discontinued - Replacement Parts Only



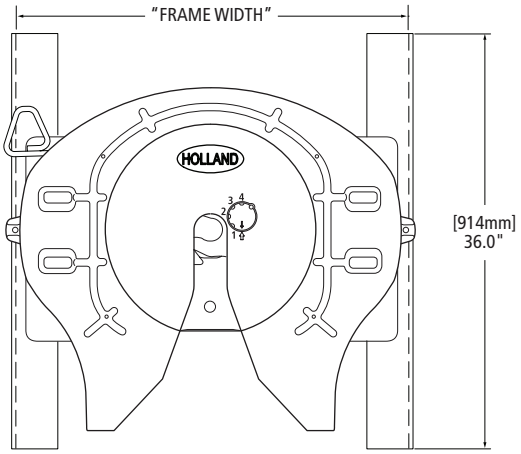

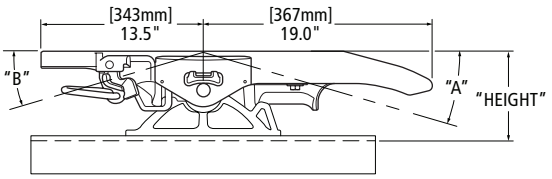

STANDARD OPTION CODES REPLACES THE UNDERSCORE (__) ON THE PART NUMBER.	
NUMBER CODE	DESCRIPTION
00 / Blank	Standard, No Other Options
14	Grease Fittings in Top Plate, Four (4) Fittings
80	Air Release, OEM Replacement, Left-Hand Only
86	Air Release, New installations, Left-Hand Only
21	.38" x 5" x 5" Angle
51	.38" x 4.0" [102] x 6" Angle

FRAME WIDTH CODE CHART					
CODE	FRAME WIDTH IN [MM]	CODE	FRAME WIDTH IN [MM]	CODE	FRAME WIDTH IN [MM]
A	33.25" [845]	F	33.88" [861]	L	34.50" [876]
B	33.38" [848]	G†	34.00" [864]	M	34.62" [879]
C	33.50" [851]	H	34.12" [867]	N	34.75" [883]
D	33.62" [854]	J	34.25" [870]		
E	33.75" [857]	K	34.38" [873]		

† Standard

FW PART NUMBER CAST BRACKET◊*	HEIGHT IN [MM]	A	B	REPLACEMENT BRACKETS**	FIFTH WHEEL WEIGHT LBS [KG]
FWS2W600GL__	6.1"[155]	8°	10°	RK-W600-G	335.00 [151.95]
FWS2W700GL__	7.1"[180]	11°	15°	RK-W700-G	342.00 [155.13]
FWS2W800GL__	8.1"[206]	14°	19°	RK-W800-G	347.00 [157.40]
FWS2W900GL__	9.1"[231]	17°	24°	RK-W900-G	351.00 [159.21]

◊ For right-hand release fifth wheels, change "L" to "R" in part number.
* No longer available.
** See bracket section for more information.

 Amendments and errors reserved. © SAF-HOLLAND, Inc.

FWS2 Sliding ILS Inboard with Angle Mount

Discontinued - Replacement Parts Only

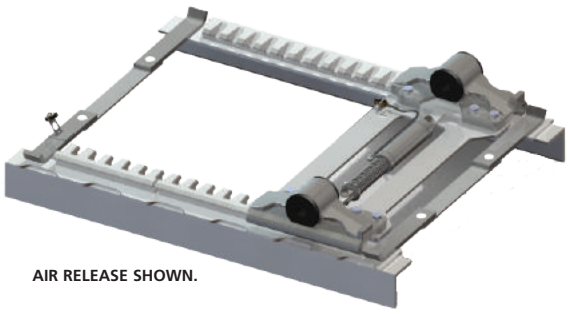

AIR RELEASE SHOWN.

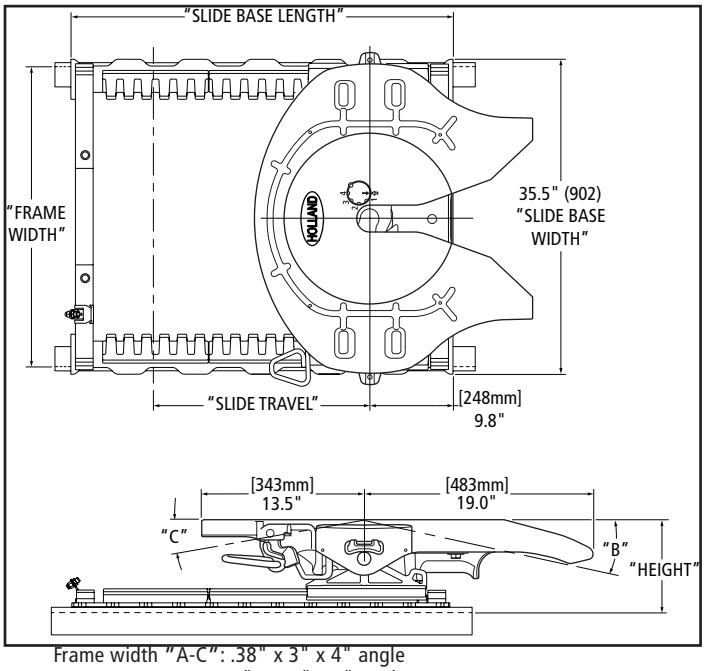

Frame width "A-C": .38" x 3" x 4" angle
"D-K": .38" x 3.5" x 4" angle
"K-Q": .38" x 4" x 4" angle
See option codes for other options.

STANDARD OPTION CODES REPLACES THE UNDERSCORE (__) ON THE PART NUMBER.	
NUMBER CODE	DESCRIPTION
00 / Blank	Standard, No Other Option
14	Grease Fittings in Top Plate, Four (4) Fittings
21	.38" x 5" x 5" Angle
51	.38" x 4" x 6" Angle
65	.31" x 4" x 4" x Angle
80	Air Release, OEM Replacement, Left-Hand Only
86	Air Release, Aftermarket Installations, Air Control Modules Included, Left-Hand Only

FRAME WIDTH CODE CHART					
CODE	FRAME WIDTH IN [MM]	CODE	FRAME WIDTH IN [MM]	CODE	FRAME WIDTH IN [MM]
A	33.25" [845]	F	33.88" [861]	L	34.50" [876]
B	33.38" [848]	**G†**	**34.00" [864]**	M	34.62" [879]
C	33.50" [851]	H	34.12" [867]	N	34.75" [883]
D	33.62" [854]	J	34.25" [870]	P	34.88" [886]
E	33.75" [857]	K	34.38" [873]	Q	35.00" [889]

† Standard

FW PART NUMBER◊*	HEIGHT IN [MM]	SLIDE TRAVEL IN [MM]	SLIDE BASE LENGTH IN [MM]	B	C	REPLACEMENT SLIDE BASE AND BRACKET**	REPLACEMENT SLIDE BASE **	REPLACEMENT BRACKET**	FIFTH WHEEL WEIGHT LBS [KG]
FWS2B712GL__	7.5" [191]	12.0" [305]	31.0" [787]	8°	6°	XA-B712G	XA-B12G	RK-10689-1	463.00 [210.01]
FWS2B724GL__		24.0" [610]	43.0" [1092]			XA-B724G	XA-B24G	RK-10689-1	509.00 [230.88]
FWS2B736GL__		36.0" [914]	55.0" [1397]			XA-B736G	XA-B36G	RK-10689-1	555.00 [251.74]
FWS2B748GL__		48.0" [1219]	67.0" [1702]			XA-B748G	XA-B48G	RK-10689-1	601.00 [272.61]
FWS2B812GL__	8.5" [216]	12.0" [305]	31.0" [787]	12°	12°	XA-B812G	XA-B12G	RK-10689-2	468.00 [212.28]
FWS2B824GL__		24.0" [610]	43.0" [1092]			XA-B824G	XA-B24G	RK-10689-2	514.00 [233.15]
FWS2B836GL__		36.0" [914]	55.0" [1397]			XA-B836G	XA-B36G	RK-10689-2	560.00 [254.01]
FWS2B848GL__		48.0" [1219]	67.0" [1702]			XA-B848G	XA-B48G	RK-10689-2	606.00 [274.88]
FWS2B912GL__	9.5" [229]	12.0" [305]	31.0" [787]	15°	19°	XA-B912G	XA-B12G	RK-10689-3	472.00 [214.10]
FWS2B924GL__		24.0" [610]	43.0" [1092]			XA-B924G	XA-B24G	RK-10689-3	518.00 [234.96]
FWS2B936GL__		36.0" [914]	55.0" [1397]			XA-B936G	XA-B36G	RK-10689-3	564.00 [255.83]
FWS2B948GL__		48.0" [1219]	67.0" [1702]			XA-B948G	XA-B48G	RK-10689-3	610.00 [276.69]

◊ For right-hand release fifth wheels, change "L" to "R" in part number.
* No longer available.
** See bracket section for more information.

XL-FW10081PM-en-US Rev D 2016-03-01 Amendments and errors reserved. © SAF-HOLLAND, Inc.

THIS PAGE INTENTIONALLY LEFT BLANK

 Amendments and errors reserved. © SAF-HOLLAND, Inc.

Discontinued - Replacement Parts Only

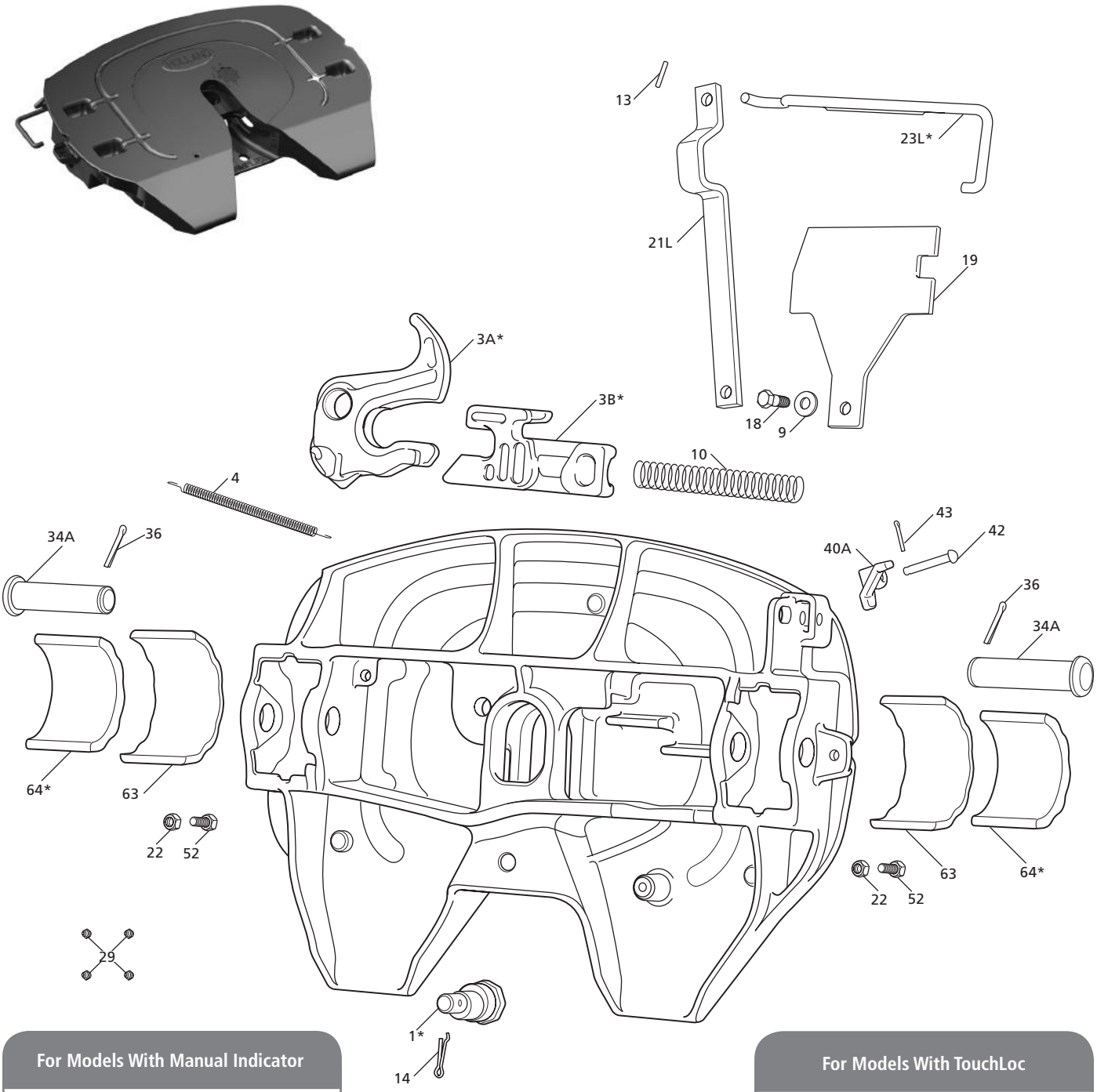

For Models With Manual Indicator

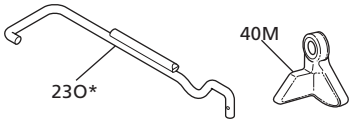

For Models With TouchLoc

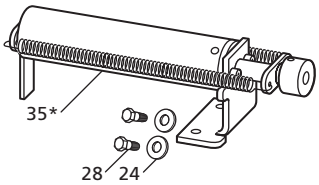

XL-FW10081PM-en-US Rev D 2016-03-01 Amendments and errors reserved. © SAF-HOLLAND, Inc.

SIMPLEX SE PARTS LIST

ITEM	DESCRIPTION	PART NUMBER	QTY.	WEIGHT LBS [KG]
1*	Pin, Eccentric Jaw	4109922-P	1	1.93 [0.88]
3A*	Lock Jaw, See 4000644	XA-4109939	1	8.48 [3.85]
3B*	Lock, See 4000647	4109931	1	6.58 [2.98]
4	Spring, Jaw Return	1200101	1	0.10 [0.05]
9	Washer, .66" I.D. x 1.31" O.D.	XB-T-199	1	0.03 [0.01]
10	Spring, Lock	1200706	1	0.63 [0.29]
13	Pin, Spring, .19" Dia. x 1.15" Long	9900181	1	0.01 [0.005]
14	Pin, Cotter, .19" Dia. x 1.25" Long	9900170	1	0.01 [0.005]
18	HHSB, .50"-13 x 1.88" GR 5	XB-11127	1	0.16 [0.07]
19	Plate, Cover	XA-10969	1	4.03 [1.83]
21L	Lever Bar, Left-Hand	4100373	1	2.69 [1.22]
22	Lock Nut, .50"-20 GR C, Cam Plates, Bracket Pins, Air Release	XB-T-69-A	2	0.04 [0.02]
23L*	Release Handle, Left-Hand with Automatic Indicator, See 4000531	4100420	1	1.46 [0.66]
23O*	Release Handle, Left-Hand with Manual Indicator, See 4000507	4100382	1	1.43 [0.65]
24	Washer, .41" I.D. x .81" O.D., Hardened	9900174	2	0.01 [0.005]
28	HHCS, .38"-16 x .75" GR 5	9900182	2	0.04 [0.02]
29	Fittings, Grease	84787	4	0.01 [0.005]
34A	Pin, Bracket	5400705	2	3.25 [1.47]
35*	Cylinder Assembly, Air, See 4000273	XA-11660	1	6.88 [3.12]
36	Pin, Cotter, .38" Dia. x 1.50" Long (Service Only)	9900169	2	0.08 [0.04]
40A	Lock Indicator, Automatic TouchLoc	4100294	1	0.55 [0.25]
40M	Lock Indicator, Manual	4101250	1	0.66 [0.30]
42	Pin, Indicator	5400711	1	0.18 [0.08]
43	Pin, Cotter, .13" Dia. x 1.25" Long	84261	1	0.01 [0.005]
52	HHCS, .50"-20 x 1.25" GR 5	XB-C-95	2	0.11 [0.05]
63	Shoe, Bracket	4100328	2	0.69 [0.31]
64A*	Insert, .33" Bracket, See 4000640	4100339	2	1.01 [0.46]
64B*	Insert, .38" Bracket, See 4000528	4100329	2	0.51 [0.23]
64C*	Insert, .42" Bracket, See 4000587	4100376	2	0.75 [0.34]

*Not sold individually - must be purchased in kit.

REPLACEMENT TOP PLATE PART NUMBERS

PART NUMBER	DESCRIPTION
10402720	Left-Hand Release with Automatic Indicator
10402727	Left-Hand Release with Manual Indicator
10602720	Left-Hand Release with TouchLoc

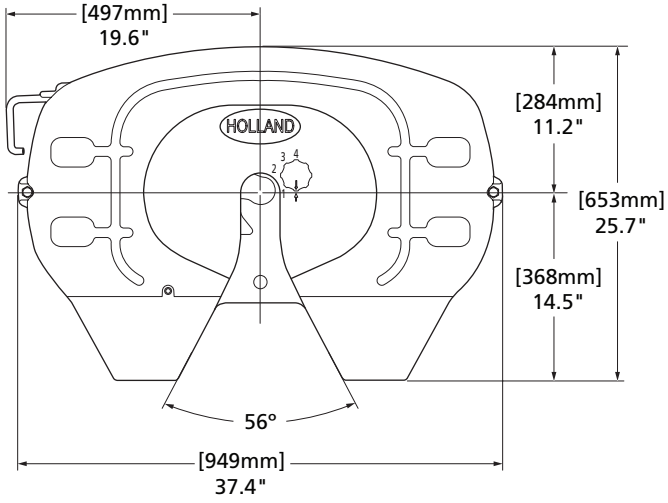

For Top Plate rebuild procedures, see Holland publication XL-FW456 at www.safholland.us

 Amendments and errors reserved. © SAF-HOLLAND, Inc.

4000647
Lock, Standard

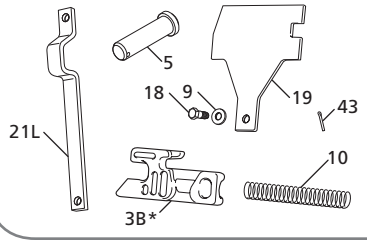

4000644
Lock, Standard

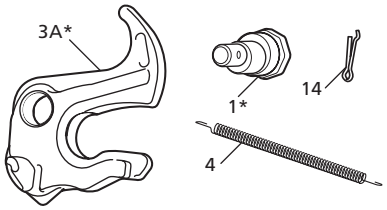

4000531
Release Handle, Left-Hand, Auto Indicator

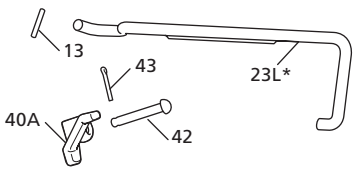

4000507
Release Handle, Left-Hand, Manual Indicator

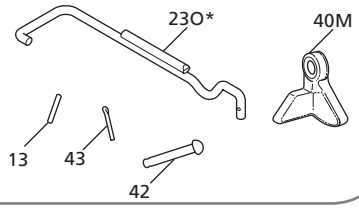

4000273
Air Cylinder for TouchLoc

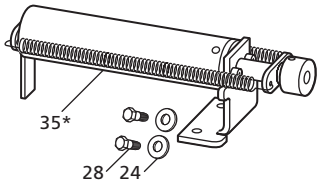

4000504
Bracket Connection, .38" Pads

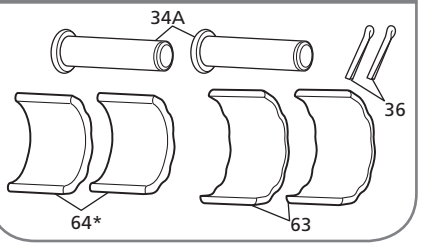

4000528
Bracket .38" Pads - STD

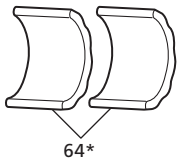

SIMPLEX SE KIT PARTS LIST

ITEM	DESCRIPTION	PART NUMBER	QTY.	WEIGHT LBS [KG]
1*	Eccentric Jaw Pin	4109922-P	1	1.93 [0.88]
3A*	Lock Jaw, Left-Hand	XA-4109939	1	8.48 [3.85]
3B*	Lock, Left Hand	4109931	1	6.58 [2.98]
4	Spring, Jaw Return	1200101	1	0.10 [0.05]
5	Pin, Clevis, .63" Dia. X 2.25" Long	5400707	1	0.22 [0.10]
9	Washer, .66" I.D. x 1.31" O.D.	XB-T-199	1	0.03 [0.01]
10	Spring, Lock	1200706	1	0.63 [0.29]
13	Pin, Spring, .19" Dia. x 1.15" Long	9900181	1	0.01 [0.005]
14	Pin, Cotter, .19" Dia. x 1.25" Long	9900170	1	0.01 [0.005]
18	HHSB, .50"-13 x 1.88" Gr 5	XB-11127	1	0.16 [0.07]
19	Plate, Cover	XA-10969	1	4.03 [1.83]
21L	Lever Bar, Left-Hand	4100373	1	2.69 [1.22]
23L*	Release Handle, Left-Hand with Automatic Indicator	4100420	1	1.46 [0.66]

SIMPLEX SE KIT PARTS LIST

ITEM	DESCRIPTION	PART NUMBER	QTY.	WEIGHT LBS [KG]
23O*	Release Handle, Left-Hand with Manual Indicator	4100382	1	1.43 [0.65]
24	Washer, .41" I.D. x .81" O.D., Hardened	9900174	2	0.01 [0.005]
28	HHCS, .38"-16 x .75" Gr 5	9900182	2	0.04 [0.02]
34A	Pin, Bracket	5400705	2	3.25 [1.47]
35*	Cylinder Assembly, Air	XA-11660	1	6.88 [3.12]
36	Pin, Cotter, .38" Dia. x 1.50" Long	9900169	2	0.08 [0.04]
40A	Lock Indicator, Left-Hand Automatic	4100294	1	0.55 [0.25]
40M	Lock Indicator, Left-Hand Manual	4101250	1	0.66 [0.30]
42	Pin, Indicator	5400711	1	0.18 [0.08]
43	Pin, Cotter, .13" Dia. x 1.25" Long	84261	1	0.01 [0.005]
63	Shoe, Bracket	4100328	2	0.69 [0.31]
64	Insert, .38" Bracket	4100329	2	0.51 [0.23]

XL-FW10081PM-en-US Rev D 2016-03-01 Amendments and errors reserved. © SAF-HOLLAND, Inc.

RK-11801
Complete Rebuild, Air Release

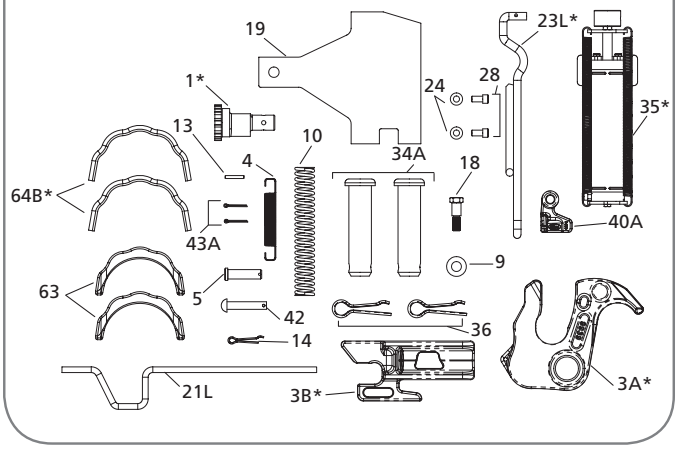

RK-11799
Complete Rebuild, Manual Release

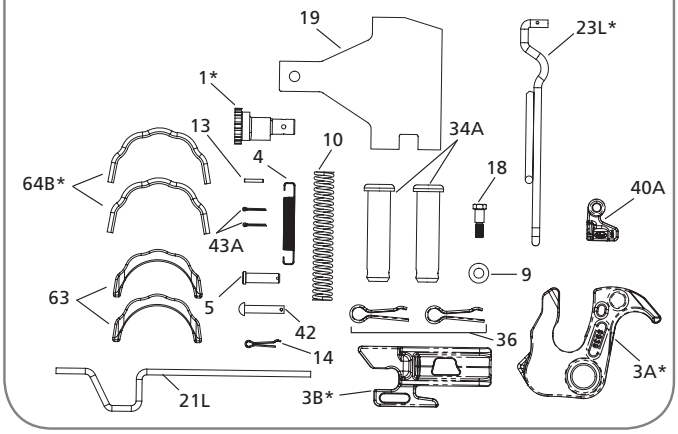

SIMPLEX SE KIT PARTS LIST

ITEM	DESCRIPTION	PART NUMBER	QTY.	WEIGHT LBS [KG]
1*	Eccentric Jaw Pin	4109922-P	1	1.93 [0.88]
3A*	Lock Jaw, Left-Hand	XA-4109939	1	8.48 [3.85]
3B*	Lock, Left Hand	4109931	1	6.58 [2.98]
4	Spring, Jaw Return	1200101	1	0.10 [0.05]
5	Pin, Clevis, .63" Dia. X 2.25" Long	5400707	1	0.22 [0.10]
9	Washer, .66" I.D. x 1.31" O.D.	XB-T-199	1	0.03 [0.01]
10	Spring, Lock	1200706	1	0.63 [0.29]
13	Pin, Spring, .19" Dia. x 1.15" Long	9900181	1	0.01 [0.005]
14	Pin, Cotter, .19" Dia. x 1.25" Long	9900170	1	0.01 [0.005]
18	HHSB, .50"-13 x 1.88" Gr 5	XB-11127	1	0.16 [0.07]
19	Plate, Cover	XA-10969	1	4.03 [1.83]
21L	Lever Bar, Left-Hand	4100373	1	2.69 [1.22]

SIMPLEX SE KIT PARTS LIST

ITEM	DESCRIPTION	PART NUMBER	QTY.	WEIGHT LBS [KG]
23L*	Release Handle, Left-Hand with Automatic Indicator	4100420	1	1.46 [0.66]
24	Washer, .41" I.D. x .81" O.D., Hardened	9900174	2	0.01 [0.005]
28	HHCS, .38"-16 x .75" Gr 5	9900182	2	0.04 [0.02]
35*	Cylinder Assembly, Air	XA-11660	1	6.88 [3.12]
36	Pin, Cotter, .38" Dia. x 1.50" Long	9900169	2	0.08 [0.04]
40A	Lock Indicator, Left-Hand Automatic	4100294	1	0.55 [0.25]
42	Pin, Indicator	5400711	1	0.18 [0.08]
43A	Pin, Cotter, .13" Dia. x 1.25" Long	84261	2	0.01 [0.005]
63	Shoe, Bracket	4100328	2	0.69 [0.31]
64B*	Insert, .38" Pocket	4100329	2	0.51 [0.23]

*Not sold individually - must be purchased in kit.

 Amendments and errors reserved. © SAF-HOLLAND, Inc.

Simplex SE with Bracket Head Castings Only

Discontinued - Replacement Parts Only



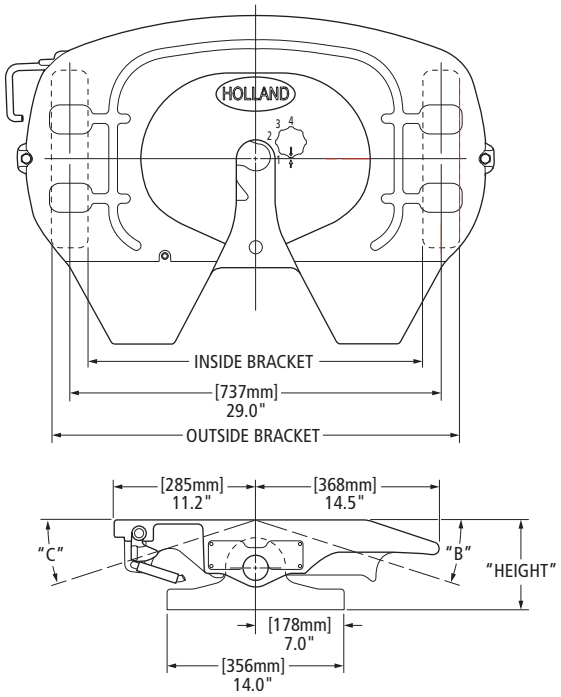

FW ASS'Y SIMPLEX SE*◊	FW WEIGHT LBS [KG]	FW ASS'Y SIMPLEX SE WITH TOUCHLOC*	FW WEIGHT LBS [KG]	HEIGHT IN [MM]	INSIDE BRACKET IN [MM]	OUTSIDE BRACKET IN [MM]	BRACKET PART NUMBER+**
10469557	244.00 [110.68]	10669557	351.00 [159.21]	5.62" [143]	26.13" [664]	31.88" [810]	4100110
10469074	245.00 [111.13]	10669074	252.00 [114.31]	5.93" [151]			4109976
10469075	252.00 [114.31]	10669075	259.00 [117.48]	7.18" [182]			4109961
10469076	259.00 [117.48]	10669076	266.00 [120.66]	8.18" [208]			4109960
10469080	261.00 [118.39]	10669680	268.00 [121.56]	8.69" [221]	25.50" [648]	32.50" [826]	4109991
10469078	274.00 [124.28]	10669078	281.00 [127.46]	9.68" [246]			4109982

◊ Add "M" to the end of the part number to specify wheel to have manual indicator.
* No longer available.
+ Only one bracket included in part number.
** See Bracket Section for more information.

XL-FW10081PM-en-US Rev D 2016-03-01 Amendments and errors reserved. © SAF-HOLLAND, Inc.

Simplex SE with Narrow Or Wide Flat Base Brackets

Discontinued - Replacement Parts Only



NARROW



WIDE

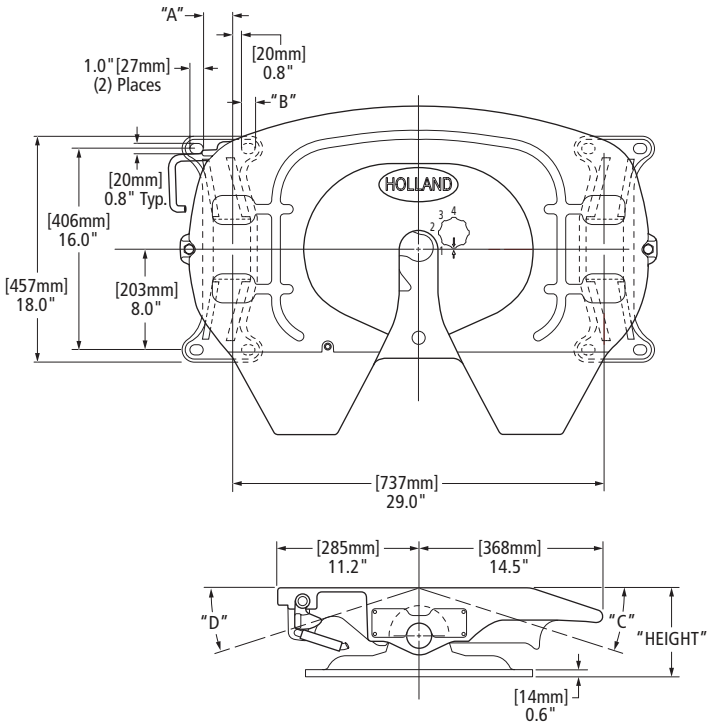

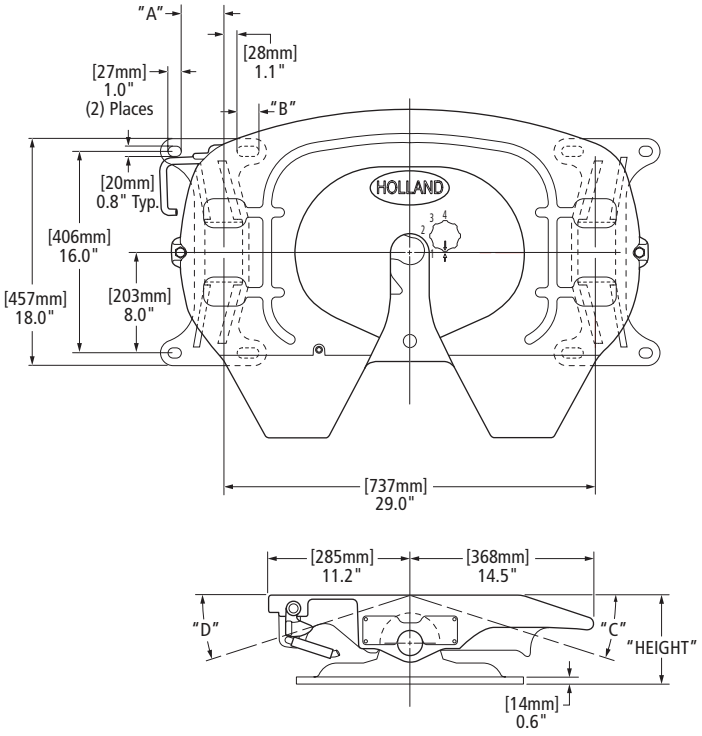

FW ASS'Y SIMPLEX SE*◊	FW WEIGHT LBS [KG]	FW ASS'Y SIMPLEX SE WITH TOUCHLOC*	FW WEIGHT LBS [KG]	FLAT BASE TYPE	HEIGHT IN [MM]	A	B	BRACKET PART NUMBER +**
10460031	275.00 [124.74]	10660031	282.00 [127.91]	Narrow	7.12" [181]	2.28" [58]	1.06" [27]	4109839
10460032	271.00 [122.92]	10660032	278.00 [126.10]		6.25" [158]			4109865
10460033	277.00 [125.65]	10660033	284.00 [128.82]	Wide	7.12" [181]	3.16" [80]	1.75" [44]	4109011
10460034	283.00 [128.37]	10660034	290.00 [131.54]		8.50" [216]			4109933

◊ Add "M" to the end of the part number to specify wheel to have manual indicator.
* No longer available.
+ Only one bracket included in part number.
** See Bracket Section for more information.

 Amendments and errors reserved. © SAF-HOLLAND, Inc.

SAF-HOLLAND Group

Simplex SE with Cast Fabricated Brackets

Discontinued - Replacement Parts Only



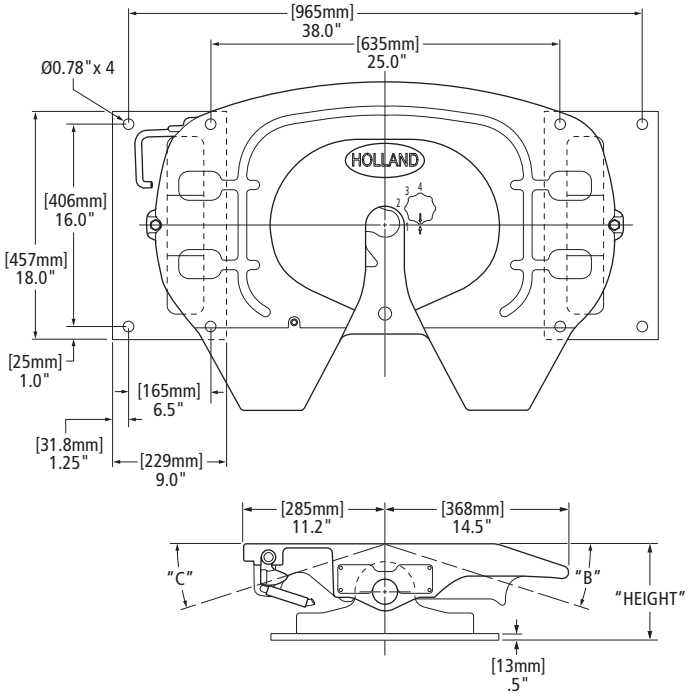

FW ASS'Y SIMPLEX SE*◊	FW WEIGHT LBS [KG]	FW ASS'Y SIMPLEX SE WITH TOUCHLOC*	FW WEIGHT LBS [KG]	HEIGHT IN [MM]	B	C	BRACKET PART NUMBER+**
10469215	336.00 [152.41]	10669215	296.00 [134.26]	6.44" [164]	2.56" [65]	6.50" [165]	4000105
10469307	343.00 [155.58]	10669307	303.00 [137.44]	7.69" [195]	3.81" [97]	6.50" [165]	4009114
10469276	350.00 [158.76]	10669276	310.00 [140.61]	8.69" [221]	4.81" [122]	6.50" [165]	4009297

◊ Add "M" to the end of the part number to specify wheel to have manual indicator.
* No longer available.
+ Only one bracket included in part number.
** See Bracket Section for more information.

XL-FW10081PM-en-US Rev D 2016-03-01 Amendments and errors reserved. © SAF-HOLLAND, Inc.

Simplex SE with Flat Mounting Plate

Discontinued - Replacement Parts Only



TILT STOPS DOWN

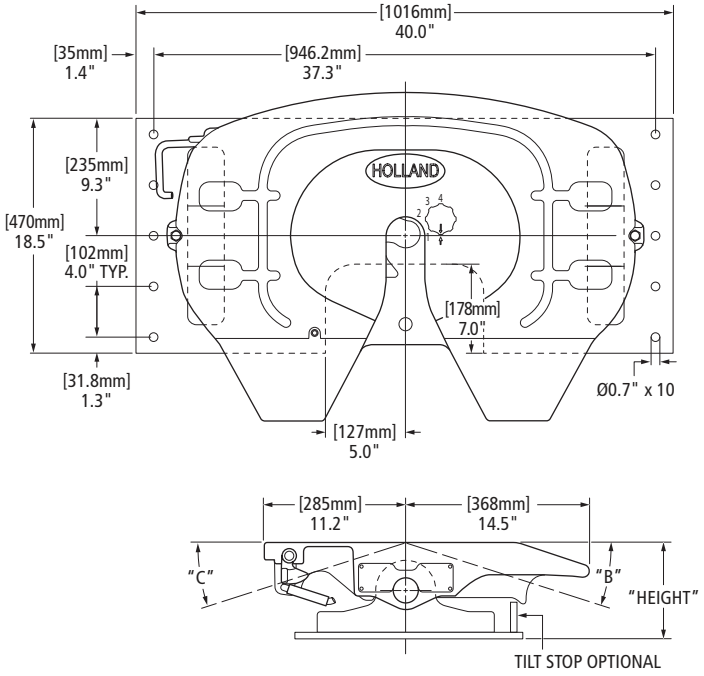

FW ASS'Y SIMPLEX SE*◊	FW WEIGHT LBS [KG]	FW ASS'Y SIMPLEX SE WITH TOUCHLOC*	FW WEIGHT LBS [KG]	TILT STOPS	HEIGHT IN [MM]	BRACKET PART NUMBER**
10469686	315.00 [142.88]	10669686	322.00 [146.06]	Without Tilt Stops	6.00" [152]	4009866
10469687	316.00 [143.34]	10669687	323.00 [146.51]		6.31" [160]	4009867
10469688	323.00 [146.51]	10669688	330.00 [149.69]		7.56" [192]	4009868
10469667	330.00 [149.69]	10669667	337.00 [152.86]		8.56" [217]	4009822
10469689	333.00 [151.05]	10669689	340.00 [154.22]		9.06" [230]	4009869
10469668	345.00 [156.49]	10669668	352.00 [159.66]		10.06" [256]	4009823
10469633	316.00 [143.34]	10669633	323.00 [146.51]	With Tilt Stops	6.00" [152]	4009747
10469618	317.00 [143.79]	10669618	324.00 [146.96]		6.31" [160]	4009723
10469666	325.00 [147.42]	10669666	332.00 [150.59]		7.56" [192]	4009821

◊ Add "M" to the end of the part number to specify wheel to have manual indicator.
* No longer available.
** See Bracket Section for more information.

 Amendments and errors reserved. © SAF-HOLLAND, Inc.

Simplex SE with Drop-Over Angle Bracket

Discontinued - Replacement Parts Only



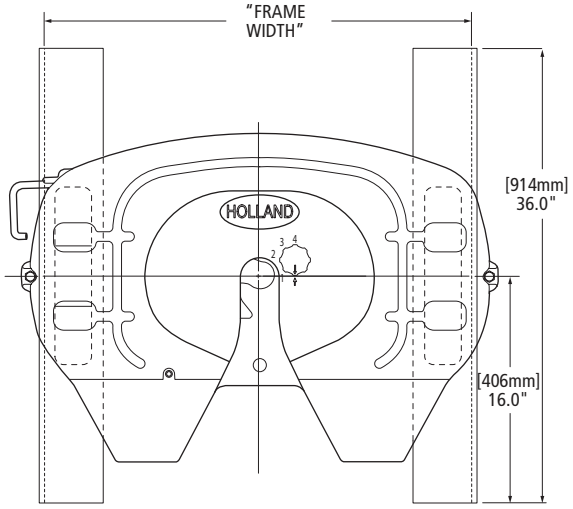

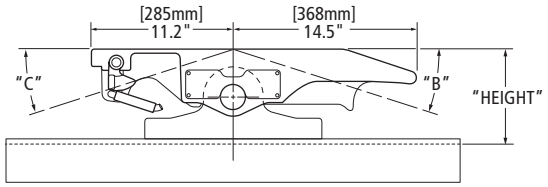

Angle Size: .38" x 3.5" x 5"

FW ASS'Y SIMPLEX SE*◊	FW WEIGHT LBS [KG]	FW ASS'Y SIMPLEX SE WITH TOUCHLOC*	FW WEIGHT LBS [KG]	HEIGHT IN [MM]	FRAME WIDTH IN [MM]	BRACKET PART NUMBER+**	BRACKET WEIGHT LBS [KG]
10460190	304.00 [137.89]	10660190	311.00 [141.07]	6.00" [152]	34.00" [864]	4101534	40.50 [18.37]
10460194	305.00 [138.35]	10660194	312.00 [141.52]	6.31" [160]		4101536	40.81 [18.51]
10460195	312.00 [141.52]	10660195	319.00 [144.70]	7.56" [192]		4101538	45.71 [20.73]
10460196	319.00 [144.70]	10660196	326.00 [147.87]	8.56" [217]		4101539	48.76 [22.12]
10460179	322.00 [146.06]	10660179	329.00 [149.23]	9.06" [230]		4101540	50.88 [23.08]
10460198	334.00 [151.50]	10660198	341.00 [154.67]	10.06" [256]		4101630	55.56 [25.20]
10460390	304.00 [137.89]	10660390	311.00 [141.07]	6.00" [152]	33.50" [851]	4101734	40.50 [18.37]
10460394	305.00 [138.35]	10660394	312.00 [141.52]	6.31" [160]		4101736	40.81 [18.51]
10460395	312.00 [141.52]	10660395	319.00 [144.70]	7.56" [192]		4101738	44.60 [20.23]
10460396	319.00 [144.70]	10660396	326.00 [147.87]	8.56" [217]		4101739	47.81 [21.69]
10460379	322.00 [146.06]	10660379	329.00 [149.23]	9.06" [230]		4101740	49.31 [22.37]
10460398	334.00 [151.50]	10660398	341.00 [154.67]	10.06" [256]		4101830	55.56 [25.20]
10460290	304.00 [137.89]	10660290	311.00 [141.07]	6.00" [152]	33.25" [845]	4101634	40.50 [18.37]
10460294	305.00 [138.35]	10660294	312.00 [141.52]	6.31" [160]		4101636	40.81 [18.51]
10460295	312.00 [141.52]	10660295	319.00 [144.70]	7.56" [192]		4101638	44.60 [20.23]
10460296	319.00 [144.70]	10660296	326.00 [147.87]	8.56" [217]		4101639	47.81 [21.69]
10460279	322.00 [146.06]	10660279	329.00 [149.23]	9.06" [230]		4101640	49.31 [22.37]
10460298	334.00 [151.50]	10660298	341.00 [154.67]	10.06" [256]		4101730	55.56 [25.20]

◊ Add "M" to the end of the part number to specify wheel to have manual indicator.
* No longer available.
+ Only one bracket included in part number.
** See Bracket Section for more information.

XL-FW10081PM-en-US Rev D 2016-03-01 Amendments and errors reserved. © SAF-HOLLAND, Inc.

Simplex SE with Taperloc™ XL Slider

Discontinued - Replacement Parts Only



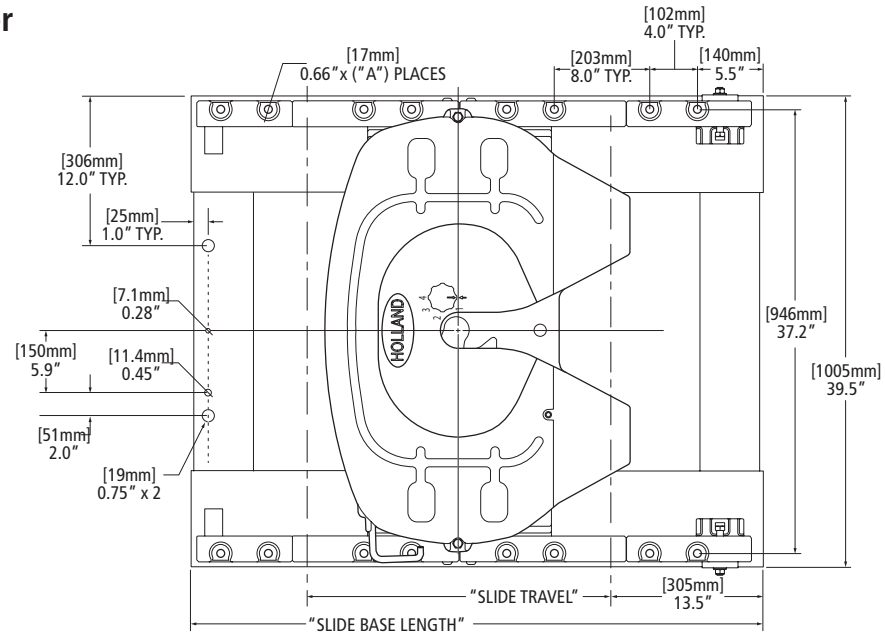

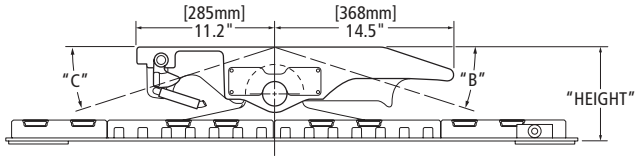

FW ASS'Y SIMPLEX SE*◊	FW WEIGHT LBS [KG]	FW ASS'Y SIMPLEX SE WITH TOUCHLOC*	FW WEIGHT LBS [KG]	SLIDE TRAVEL IN [MM]	SLIDE BASE LENGTH IN [MM]	HEIGHT IN [MM]	A # OF HOLES	B	C	SLIDE* BRACKET ASSEMBLY**	SLIDE BASE* REPLACEMENT**
10580000	412.00 [186.88]	10780000	419.00 [190.06]	12.0" [305]	36.0" [914]	6.81" [173]	12	7°	7°	4300298	4300280
10580001	419.00 [190.06]	10780001	426.00 [193.23]	16.0" [407]	40.0" [1016]		16				4300281
10580002	436.00 [197.77]	10780002	443.00 [200.94]	24.0" [610]	48.0" [1219]		16				4300282
10580003	460.00 [208.65]	10780003	467.00 [211.83]	36.0" [914]	60.0" [1524]		20				4300283
10580004	493.00 [223.62]	10780004	500.00 [226.80]	48.0" [1219]	72.0" [1829]		24				4300284
10580005	423.00 [191.87]	10780005	430.00 [195.04]	12.0" [305]	36.0" [914]	7.75" [197]	12	12°	12°	4300299	4300280
10580006	430.00 [195.04]	10780006	437.00 [198.22]	16.0" [407]	40.0" [1016		16				4300281
10580007	447.00 [202.76]	10780007	454.00 [205.93]	24.0" [610]	48.0" [1219]		16				4300282
10580008	471.00 [213.64]	10780008	478.00 [216.82]	36.0" [914]	60.0" [1524		20				4300283
10580009	505.00 [229.06]	10780009	512.00 [232.24]	48.0" [1219]	72.0" [1829]		24				4300284
10580010	439.00 [199.13]	10780010	446.00 [202.30]	12.0" [305]	36.0" [914]	8.75" [222]	12	12°	12°	4300300	4300280
10580011	446.00 [202.30]	10780011	453.00 [205.48]	16.0" [407]	40.0" [1016		16				4300281
10580012	463.00 [210.01]	10780012	470.00 [213.19]	24.0" [610]	48.0" [1219]		16				4300282
10580013	488.00 [221.35]	10780013	496.00 [224.98]	36.0" [914]	60.0" [1524		20				4300283
10580014	521.00 [236.32]	10780014	528.00 [239.50]	48.0" [1219]	72.0" [1829]		24				4300284

◊ Add "M" to the end of the part number to specify wheel to have manual indicator.
* No longer available.
** See Bracket Section for more information.

 Amendments and errors reserved. © SAF-HOLLAND, Inc.

SAF-HOLLAND Group

Taperloc™ Slider with Simplex SE

Discontinued - Replacement Parts Only



AIR RELEASE SHOWN

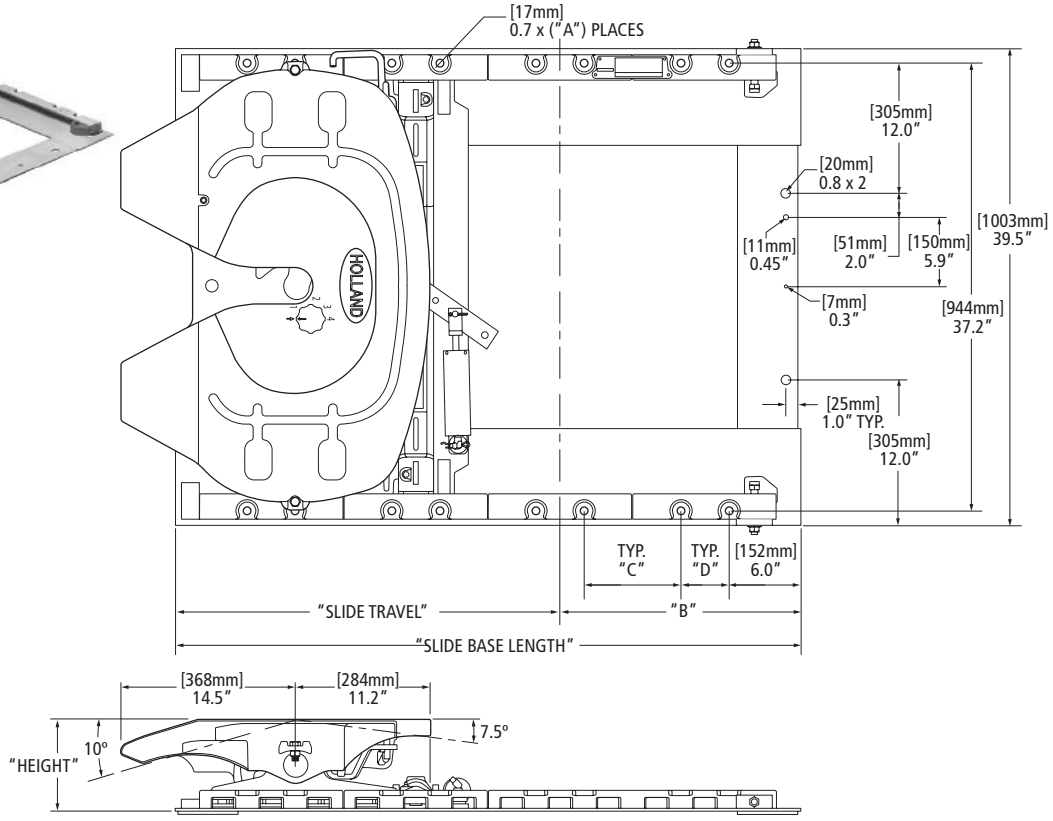

◊ Add "M" to the end of the part number to specify wheel to have manual indicator.
* No longer available.
** See Bracket Section for more information.

XL-FW10081PM-en-US Rev D 2016-03-01 Amendments and errors reserved. © SAF-HOLLAND, Inc.

FW ASSEMBLY NUMBER			ASSEMBLY NUMBER														
AIR SLIDER*◊	MANUAL SLIDER*◊	FW WEIGHT LBS [KG]	TOUCHLOC AIR SLIDER*	TOUCHLOC MANUAL SLIDER*	FW WEIGHT LBS [KG]	"B" MAX FWD	C	D	HGT	SLIDE TRAVEL IN [MM]	SLIDE BASE LENGTH	A # OF HOLES	SLIDE BASE PART NO.	SLIDE BASE WEIGHT LBS [KG]	BRACKET PART NO.	BRACKET PART WEIGHT
10575531	10575071	461.00 [209.11]	10775531	10775071	468.00 [212.28]	8.00" [203]	8.0" [203]	4.0" [102]	6.81" [173]	12.0" [305]	40.0" [1016]	12	4300175	103.40 [46.90]	4300165 (Air) 4300204 (Manual)	144.30 [65.45] (Air) 146.10 [66.27] (Manual)
10575537	10575076	469.00 [212.73]	10775536	10775076	476.00 [215.91]		4.0" [102]	8.0" [203]		16.0" [406]	44.0" [1118]	12	4300196	113.30 [51.39]		
10575532	10575072	484.00 [219.54]	10775532	10775072	491.00 [222.71]		8.0" [203]	4.0" [102]		24.0" [610]	52.0" [1321]	16	4300176	128.10 [58.11]		
10575533	10575073	505.00 [229.06]	10775533	10775073	509.00 [230.88]		8.0" [203]	4.0" [102]		36.0" [914]	64.0" [1626]	20	4300177	152.80 [69.31]		
10575534	10575074	536.00 [243.13]	10775534	10775074	543.00 [246.30]		8.0" [203]	4.0" [102]		48.0" [1219]	76.0" [1930]	24	4300178	186.50 [84.59]		
10575631	10575171	468.00 [212.28]	10775631	10775171	475.00 [215.46]	10.00" [254]	8.0" [203]	4.0" [102]	7.75" [197]	12.0" [305]	40.0" [1016]	12	4300175	103.40 [46.90]	4300166 (Air) 4300205 (Manual)	148.10 [67.18] (Air) 149.90 [67.99] (Manual)
10575637	10575176	476.00 [215.91]	10775636	10775176	483.00 [219.09]		4.0" [102]	8.0" [203]		16.0" [406]	44.0" [1118]	12	4300196	113.30 [51.39]		
10575632	10575172	486.00 [220.45]	10775632	10775172	493.00 [223.62]		8.0" [203]	4.0" [102]		24.0" [610]	52.0" [1321]	16	4300176	128.10 [58.11]		
10575633	10575173	512.00 [232.24]	10775633	10775173	519.00 [235.41]		8.0" [203]	4.0" [102]		36.0" [914]	64.0" [1626]	20	4300177	152.80 [69.31]		
10575634	10575174	543.00 [246.30]	10775634	10775174	550.00 [249.48]		8.0" [203]	4.0" [102]		48.0" [1219]	76.0" [1930]	24	4300178	186.50 [84.59]		
10575731	10575271	472.00 [214.10]	10775731	10775271	479.00 [217.27]	10.00" [254]	8.0" [203]	4.0" [102]	8.75" [222]	12.0" [305]	40.0" [1016]	12	4300175	103.40 [46.90]	4300167 (Air) 4300206 (Manual)	151.90 [68.90] (Air) 153.70 [69.72] (Manual
10575737	10575276	480.00 [217.72]	10775736	10775276	487.00 [220.90]		4.0" [102]	8.0" [203]		16.0" [406]	44.0" [1118]	12	4300196	113.30 [51.39]		
10575732	10575272	495.00 [224.53]	10775732	10775272	502.00 [227.70]		8.0" [203]	4.0" [102]		24.0" [610]	52.0" [1321]	16	4300176	128.10 [58.11]		
10575733	10575273	516.00 [234.05]	10775733	10775273	523.00 [237.23]		8.0" [203]	4.0" [102]		36.0" [914]	64.0" [1626]	20	4300177	152.80 [69.31]		
10575734	10575374	547.00 [248.12]	10775734	10775274	554.00 [251.29]		8.0" [203]	4.0" [102]		48.0" [1219]	76.0" [1930]	24	4300178	186.50 [84.59]		
10575831	10575371	492.00 [223.17]	10775831	10775371	492.00 [223.17]	10.00" [254]	8.0" [203]	4.0" [102]	9.75" [248]	12.0" [305]	40.0" [1016]	12	4300175	103.40 [46.90]	4300172 (Air) 4300173 (Manual)	165.00 [74.84] (Air) 166.70 [75.61] (Manual)
10575837	10575376	500.00 [226.80]	10775836	10775376	500.00 [226.80]		4.0" [102]	8.0" [203]		16.0" [406]	44.0" [1118]	12	4300196	113.30 [51.39]		
10575832	10575372	502.00 [227.70]	10775832	10775372	502.00 [227.70]		8.0" [203]	4.0" [102]		24.0" [610]	52.0" [1321]	16	4300176	128.10 [58.11]		
10575833	10575373	536.00 [243.13]	10775833	10775373	536.00 [243.13]		8.0" [203]	4.0" [102]		36.0" [914]	64.0" [1626]	20	4300177	152.80 [69.31]		
10575834	10575374	566.00 [256.73]	10775834	10775374	566.00 [256.73]		8.0" [203]	4.0" [102]		48.0" [1219]	76.0" [1930]	24	4300178	186.50 [84.59]		

 Amendments and errors reserved. © SAF-HOLLAND, Inc.

Discontinued - Replacement Parts Only



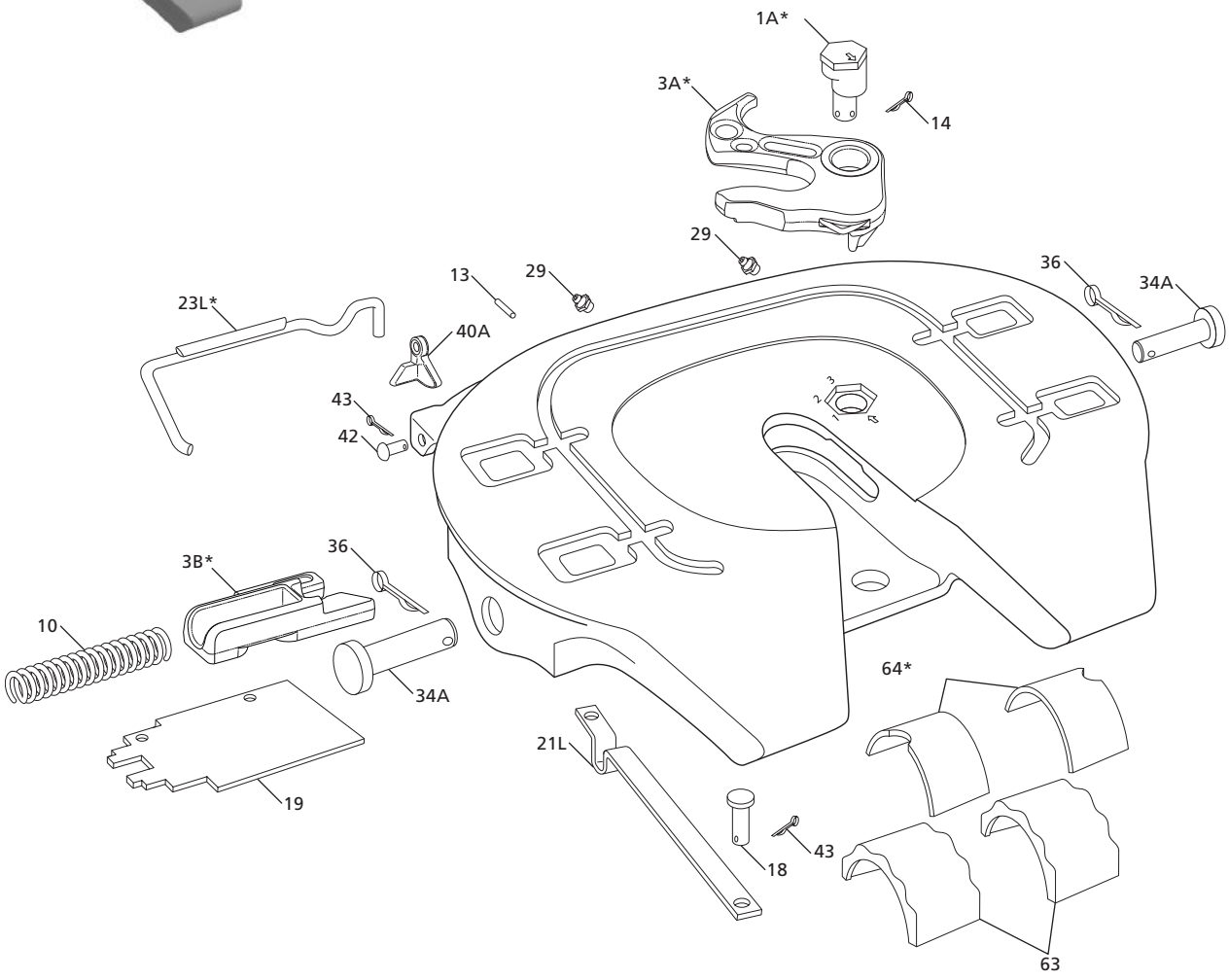

FOR MODELS WITH TOUCHLOC

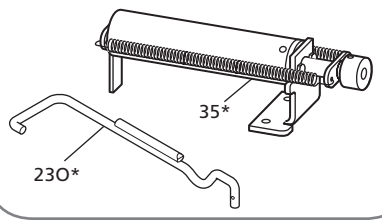

FOR MODELS WITH MANUAL INDICATOR

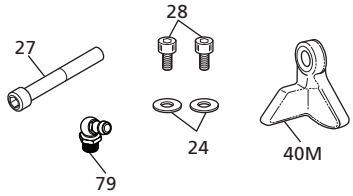

XL-FW10081PM-en-US Rev D 2016-03-01 Amendments and errors reserved. © SAF-HOLLAND, Inc.

SIMPLEX LITE PARTS LIST				
ITEM	DESCRIPTION	PART NUMBER	QTY.	WEIGHT LBS [KG]
1A*	Pin, Eccentric Jaw	4109916	1	1.87 [0.85]
3A*	Lock Jaw, See 4000501, 4000502, 4000539	XA-4109939	1	8.48 [3.85]
3B*	Lock, Left-Hand, See 4000570	XA-4109931	1	6.58 [2.98]
10	Spring, Lock	1200706	1	0.63 [0.29]
13	Pin, Spring, .19" Dia. x 1.15" Long	9900181	1	0.01 [0.005]
14	Pin, Cotter, .19" Dia. x 1.25" Long	9900170	1	0.01 [0.005]
18	Pin, Lever Bar	4000250	1	0.18 [0.08]
19	Plate, Cover	4100155	1	2.37 [1.08]
21L	Lever Bar, Left-Hand	4100373	1	2.69 [1.22]
23L*	Release Handle, Left-Hand with Automatic Indicator, See 4000531	4100420	1	1.46 [0.66]
23O*	Release Handle, Left-Hand with Manual Indicator, See 4000507	4100382	1	1.43 [0.65]
24	Washer, .41" I.D. x .81" O.D., Hardened	9900174	2	0.01 [0.005]
27	SHCS, .38"-16 x 3" Long	9900184	1	0.12 [0.05]
28	HHCS, .38"-16 x .75" GR 5	9900182	2	0.04 [0.02]
29	Fittings, Grease	84787	2	0.01 [0.005]
34A	Pin, Bracket	5400705	2	3.25 [1.47]
35*	Cylinder Assembly, Air, See 4000273	XA-11660	1	6.88 [3.12]
36	Pin, Cotter, .38" Dia. x 1.50" Long	9900169	2	0.08 [0.04]
40A	Lock Indicator, Left-Hand Automatic	4100294	1	0.55 [0.25]
40M	Lock Indicator, Left-Hand Manual	4101250	1	0.66 [0.30]
42	Pin, Indicator	5400711	1	0.18 [0.08]
43	Pin, Cotter, .13" Dia. x 1.25" Long	84261	2	0.01 [0.005]
63	Shoe, Bracket	4100328	2	0.69 [0.31]
64*	Insert, .38" Bracket, See 4000528 or 4000504	4100329	2	0.51 [0.23]
79	Fittings, Grease 65° x .38" Long	85496	1	0.01 [0.005]

*Not sold individually - must be purchased in kit.

NOTE: Replacement top plates no longer available.

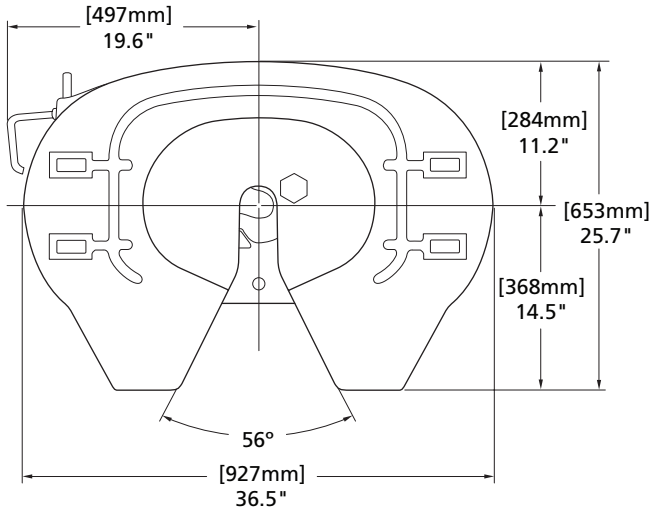

For Top Plate rebuild procedures, see Holland publication XL-FW460 at www.safholland.us

 Amendments and errors reserved. © SAF-HOLLAND, Inc.

Simplex Lite Straight Pull Replacement Kits

4000501
Rebuild, Jaw

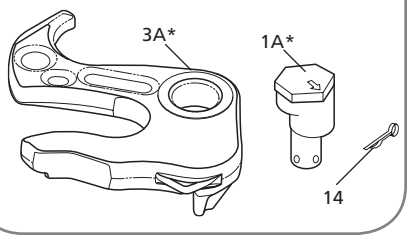

4000502
Rebuild, Jaw, Oversize

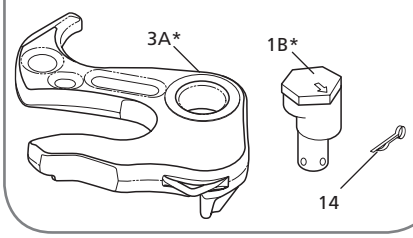

4000539
Jaw and Return Spring Retrofit

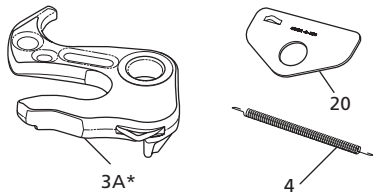

4000531
Release Handle, Left-Hand, Auto Indicator

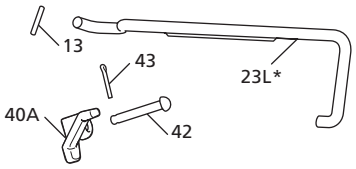

4000507
Release Handle, Left-Hand, Manual Indicator

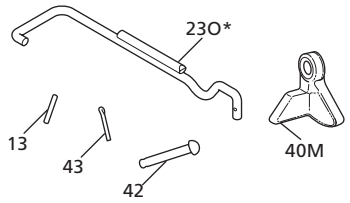

4000570
Lock, Standard

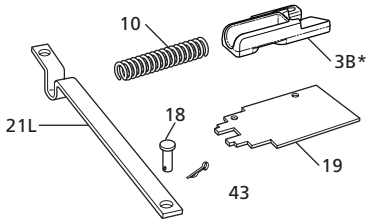

4000273
Air Cylinder for TouchLoc

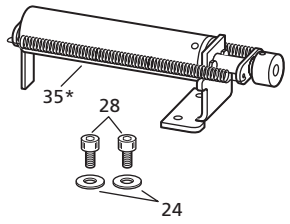

4000272
Air Cylinder for TouchLoc

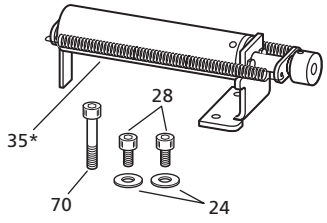

SIMPLEX LITE STRAIGHT PULL KIT PARTS LIST

ITEM	DESCRIPTION	PART NUMBER	QTY.	WEIGHT LBS [KG]
1A*	Pin, Eccentric Jaw	4109916	1	1.87 [0.85]
1B*	Pin, Eccentric Jaw, Oversized	4109977	1	1.90 [0.86]
3A*	Lock Jaw, Left-Hand	XA-4109939	1	8.48 [3.85]
3B*	Lock, Left-Hand	4109931	1	6.58 [2.98]
10	Spring, Lock	1200706	1	0.63 [0.29]
13	Pin, Spring, .19" Dia. x 1.15" Long	9900181	1	0.01 [0.005]
14	Pin, Cotter, .19" Dia. x 1.25" Long	9900170	1	0.01 [0.005]
18	Pin, Lever Bar	4000250	1	0.18 [0.08]
19	Plate, Cover	4100155	1	2.37 [1.08]
20	Plate, Spring Retainer, Left-Hand	4100101	1	0.31 [0.14]
21L	Lever Bar, Left-Hand	4100373	1	2.69 [1.22]
23L*	Release Handle, Left-Hand with Automatic Indicator	4100420	1	1.46 [0.66]
23O*	Release Handle, Left-Hand with Manual Indicator	4100382	1	1.43 [0.65]
24	Washer, .41" I.D. x .81" O.D., Hardened	9900174	2	0.01 [0.005]

SIMPLEX LITE STRAIGHT PULL KIT PARTS LIST

ITEM	DESCRIPTION	PART NUMBER	QTY.	WEIGHT LBS [KG]
28	HHCS, .38"-16 x .75" GR 5	9900182	2	0.04 [0.02]
35*	Cylinder Assembly, Air	XA-11660	1	6.88 [3.12]
40A	Lock Indicator, Left-Hand Automatic	4100294	1	0.55 [0.25]
40M	Lock Indicator, Left-Hand Manual	4101250	1	0.66 [0.30]
42	Pin, Indicator	5400711	1	0.18 [0.08]
43	Pin, Cotter, .13" Dia. x 1.25" Long	84261	1	0.01 [0.005]

*Not sold individually - must be purchased in kit.

XL-FW10081PM-en-US Rev D 2016-03-01 Amendments and errors reserved. © SAF-HOLLAND, Inc.

4000641
Bracket Connection, .33" Pads

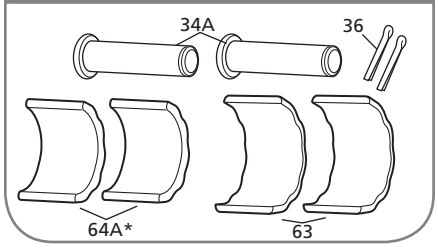

4000504
Bracket Connection, .38" Pads

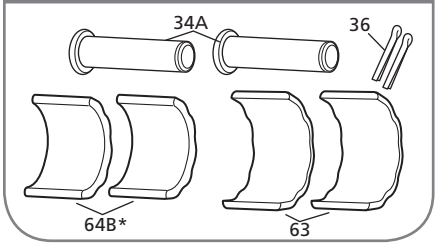

4000528
Bracket, .38" Pads - STD

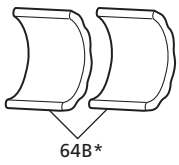

SIMPLEX LITE STRAIGHT PULL KIT PARTS LIST

ITEM	DESCRIPTION	PART NUMBER	QTY.	WEIGHT LBS [KG]
34A	Pin, Bracket	5400705	2	3.25 [1.47]
36	Pin, Cotter, .38" Dia. x 1.50" Long	9900169	2	0.08 [0.04]
63	Shoe, Bracket	4100328	2	0.69 [0.31]
64B	Insert, .38" Bracket, See 4000528 or 4000504	4100329	2	0.51 [0.23]

*Not sold individually - must be purchased in kit.

 Amendments and errors reserved. © SAF-HOLLAND, Inc.

SAF-HOLLAND Group

Simplex Lite Straight Pull with Bracket Head Castings Only

Discontinued - Replacement Parts Only



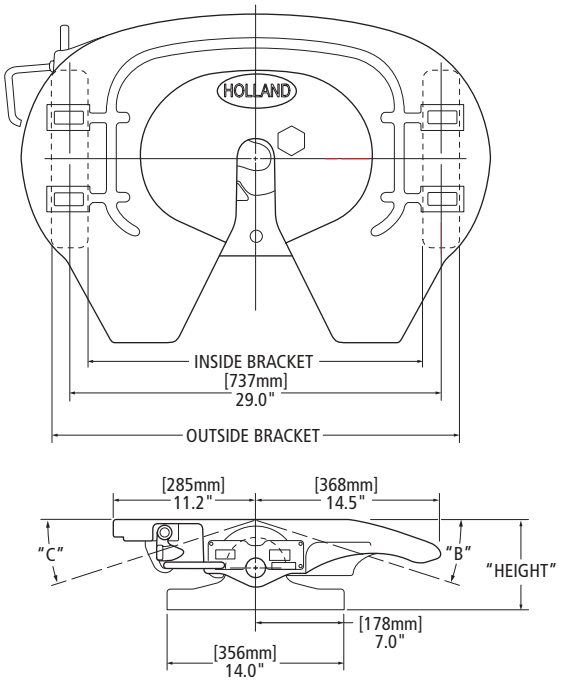

BRACKET PART NUMBER+**	HEIGHT IN [MM]	INSIDE BRACKET	OUTSIDE BRACKET	WEIGHT LBS [KG]
4100110	5.62" [143]	26.13" [664]	31.88" [810]	10.33 [4.69]
4109976	5.93" [151]			10.48 [4.75]
4109961	7.18" [182]			14.10 [6.40]
4109960	8.18" [208]			17.13 [7.77]
4109991	8.69" [221]	25.50" [648]	32.50" [826]	19.27 [8.74]
4109982	9.68" [246]			23.86 [10.82]

◊ Add "M" to the end of the part number to specify wheel to have manual indicator.
* No longer available.
+ Only one bracket included in part number.
** See Bracket Section for more information.

XL-FW10081PM-en-US Rev D 2016-03-01 Amendments and errors reserved. © SAF-HOLLAND, Inc.

Simplex Lite Straight Pull with Narrow Or Wide Flat Base Brackets

Discontinued - Replacement Parts Only



NARROW



WIDE

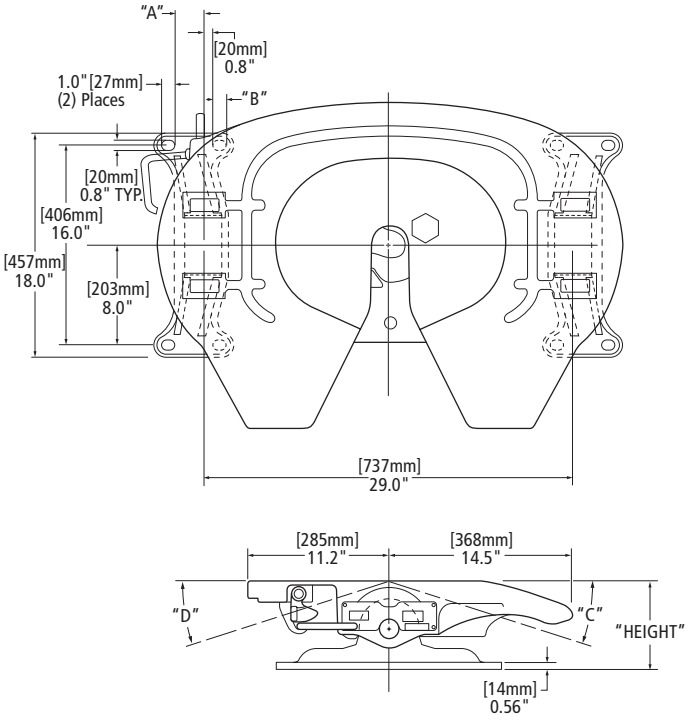

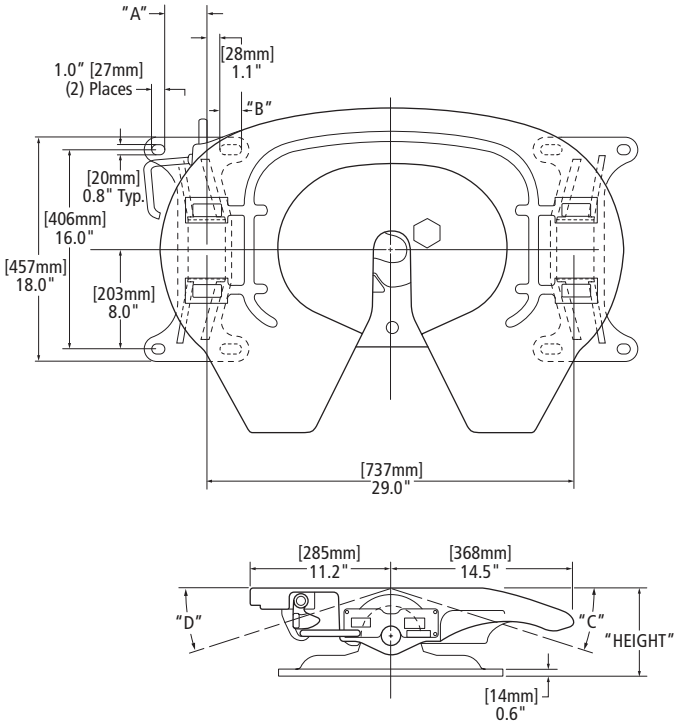

BRACKET PART NUMBER +**	FLAT BASE TYPE	HEIGHT IN [MM]	A	B	WEIGHT LBS [KG]
4109839	Narrow	7.12" [181]	2.28"[58]	1.06" [27]	25.44 [11.54]
4109865	Wide	6.25" [159]	3.16" [80]	1.75" [44]	23.80 [10.80]
4109011		7.12" [181]			26.70 [12.11]
4109933		8.50" [216]			30.20 [13.70]

◊ Add "M" to the end of the part number to specify wheel to have manual indicator.
* No longer available.
+ Only one bracket included in part number.
** See Bracket Section for more information.

 Amendments and errors reserved. © SAF-HOLLAND, Inc.

SAF-HOLLAND Group

Simplex Lite Straight Pull with Cast Fabricated Brackets

Discontinued - Replacement Parts Only



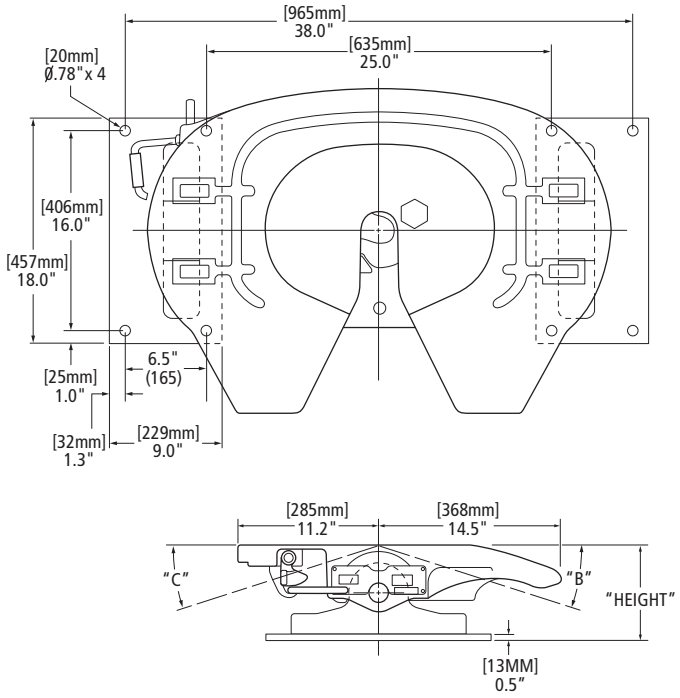

BRACKET PART NUMBER+**	HEIGHT IN [MM]	B	C	WEIGHT LBS [KG]
4000105	6.44" [164]	2.56" [65]	6.50" [165]	33.04 [14.99]
4009114	7.69" [195]	3.81" [97]	6.50" [165]	36.65 [16.62]
4009297	8.69" [221]	4.81" [122]	6.50" [165]	39.68 [18.00]

◊ Add "M" to the end of the part number to specify wheel to have manual indicator.
* No longer available.
+ Only one bracket included in part number.
** See Bracket Section for more information.

XL-FW10081PM-en-US Rev D 2016-03-01 Amendments and errors reserved. © SAF-HOLLAND, Inc.

Simplex Lite Straight Pull with Flat Mounting Plate

Discontinued - Replacement Parts Only



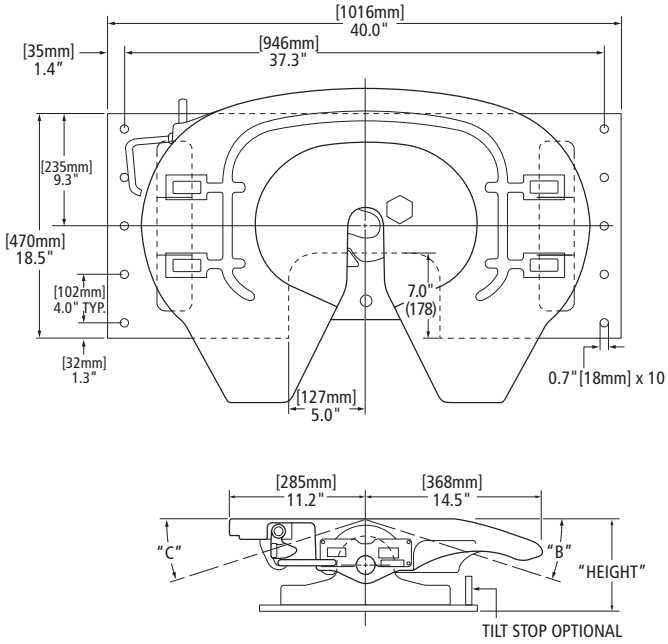

BRACKET PART NUMBER+**	TILT STOPS	HEIGHT IN [MM]	WEIGHT LBS [KG]
10469686	Without Tilt Stops	6.00" [152]	315.00 [142.88]
10469687		6.31" [160]	316.00 [143.34]
10469688		7.56" [192]	323.00 [146.51]
10469667		8.56" [217]	330.00 [149.69]
10469689		9.06" [230]	333.00 [151.05]
10469668		10.06" [256]	345.00 [156.49]
10469633	With Tilt Stops	6.00" [152]	316.00 [143.34]
10469618		6.31" [160]	317.00 [143.79]
10469666		7.56" [192]	325.00 [147.42]

◊ Add "M" to the end of the part number to specify wheel to have manual indicator.
* No longer available.
** See Bracket Section for more information.

 Amendments and errors reserved. © SAF-HOLLAND, Inc.

SAF-HOLLAND Group

Simplex Lite Straight Pull with Drop-Over Angle Bracket

Discontinued - Replacement Parts Only



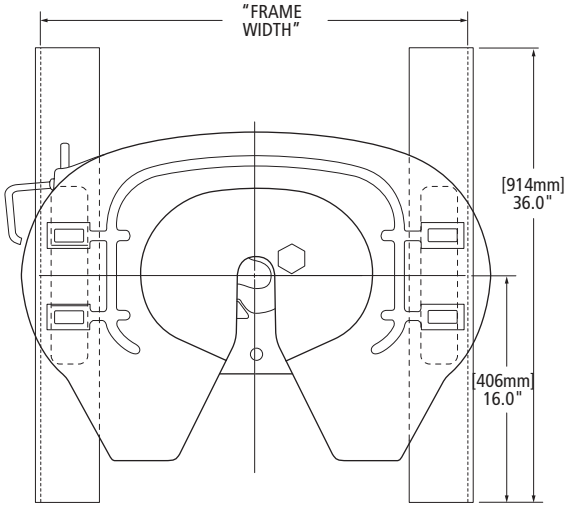

Angle Size: .38" x 3.5" x 5"

BRACKET PART NUMBER+**	HEIGHT IN [MM]	FRAME WIDTH IN [MM]	WEIGHT LBS [KG]
4101534	6.00" [152]	34.00" [864]	40.50 [18.37]
4101536	6.31" [160]		40.81 [18.51]
4101538	7.56" [192]		45.71 [20.73]
4101539	8.56" [217]		48.76 [22.12]
4101540	9.06" [230]		50.88 [23.08]
4101630	10.06" [256]		55.56 [25.20]
4101734	6.00" [152]	33.50" [851]	40.50 [18.37]
4101736	6.31" [160]		40.81 [18.51]
4101738	7.56" [192]		44.60 [20.23]
4101739	8.56" [217]		47.81 [21.69]
4101740	9.06" [230]		49.31 [22.37]
4101830	10.06" [256]		55.56 [25.20]
4101634	6.00" [152]	33.25" [845]	40.50 [18.37]
4101636	6.31" [160]		40.81 [18.51]
4101638	7.56" [192]		44.60 [20.23]
4101639	8.56" [217]		47.81 [21.69]
4101640	9.06" [230]		49.31 [22.37]
4101730	10.06" [256]		55.56 [25.20]

◊ Add "M" to the end of the part number to specify wheel to have manual indicator.
* No longer available.
+ Only one bracket included in part number.
** See Bracket Section for more information.

XL-FW10081PM-en-US Rev D 2016-03-01 Amendments and errors reserved. © SAF-HOLLAND, Inc.

THIS PAGE INTENTIONALLY LEFT BLANK

 Amendments and errors reserved. © SAF-HOLLAND, Inc.

SAF-HOLLAND Group

Taperloc™ Slider with Simplex Lite Straight Pull

Discontinued - Replacement Parts Only

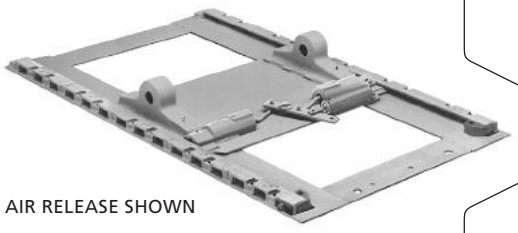

AIR RELEASE SHOWN

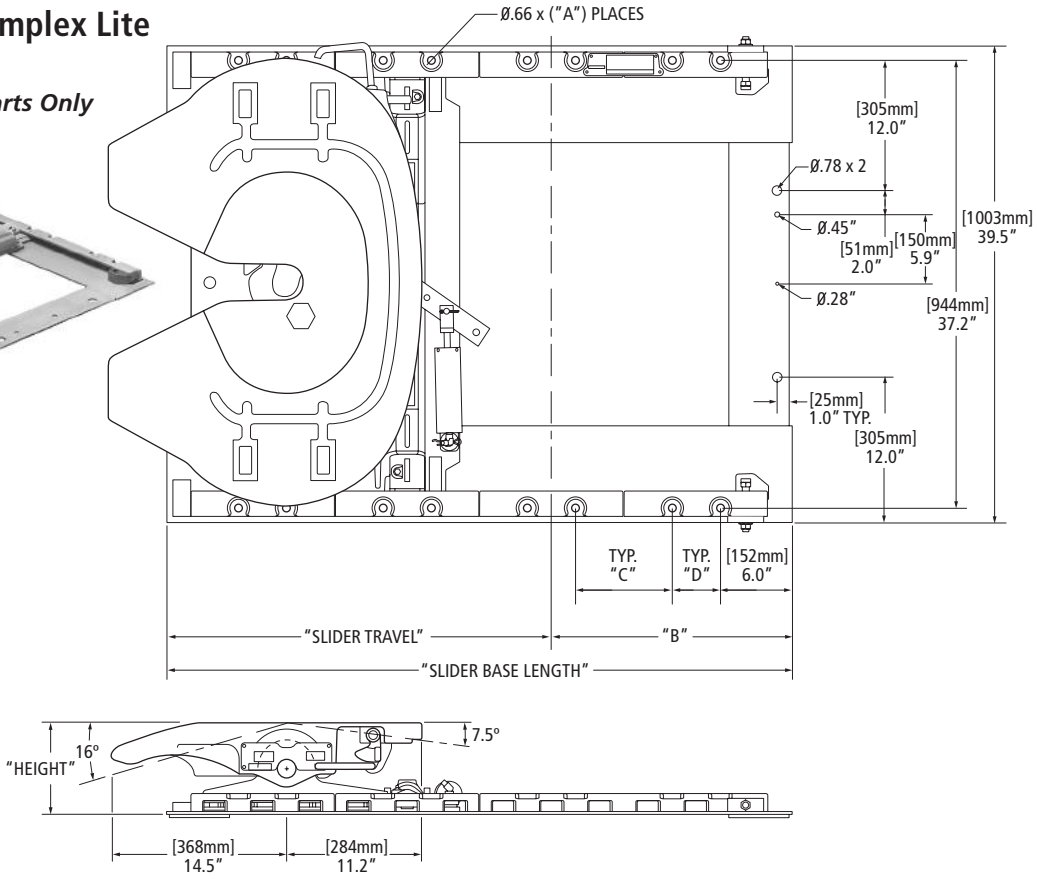

XL-FW10081PM-en-US Rev D 2016-03-01 Amendments and errors reserved. © SAF-HOLLAND, Inc.

SLIDE BASE PART NO.	SLIDE BASE WEIGHT LBS [KG]	AIR-BRACKET PART NO.	AIR-BRACKET PART WEIGHT	MANUAL-BRACKET PART NO.	MANUAL-BRACKET WEIGHT	"B" MAX FWD	C	D	HEIGHT IN [MM]	SLIDE TRAVEL IN [MM]	SLIDE BASE LENGTH	A # OF HOLES
4300175	103.40 [46.90]						8.0" [203]	4.0" [102]		12.0" [305]	40.0" [1016]	12
4300196	113.30 [51.39]						4.0" [102]	8.0" [203]		16.0" [406]	44.0" [1118]	12
4300176	128.10 [58.11]	4300165	144.3 lbs.	4300204	146.1 lbs.	8.00" [203]	8.0" [203]	4.0" [102]	6.81 [173]	24.0" [610]	52.0" [1321]	16
4300177	152.80 [69.31]						8.0" [203]	4.0" [102]		36.0" [914]	64.0" [1626]	20
4300178	186.50 [84.59]						8.0" [203]	4.0" [102]		48.0" [1219]	76.0" [1930]	24
4300175	103.40 [46.90]						8.0" [203]	4.0" [102]		12.0" [305]	40.0" [1016]	12
4300196	113.30 [51.39]						4.0" [102]	8.0" [203]		16.0" [406]	44.0" [1118]	12
4300176	128.10 [58.11]	4300166	148.1 lbs.	4300205	149.9 lbs.	10.00" [254]	8.0" [203]	4.0" [102]	7.75" [197]	24.0" [610]	52.0" [1321]	16
4300177	152.80 [69.31]						8.0" [203]	4.0" [102]		36.0" [914]	64.0" [1626]	20
4300178	186.50 [84.59]						8.0" [203]	4.0" [102]		48.0" [1219]	76.0" [1930]	24
4300175	103.40 [46.90]						8.0" [203]	4.0" [102]		12.0" [305]	40.0" [1016]	12
4300196	113.30 [51.39]						4.0" [102]	8.0" [203]		16.0" [406]	44.0" [1118]	12
4300176	128.10 [58.11]	4300167	151.9 lbs.	4300206	153.7 lbs.	10.00" [254]	8.0" [203]	4.0" [102]	8.75" [222]	24.0" [610]	52.0" [1321]	16
4300177	152.80 [69.31]						8.0" [203]	4.0" [102]		36.0" [914]	64.0" [1626]	20
4300178	186.50 [84.59]						8.0" [203]	4.0" [102]		48.0" [1219]	76.0" [1930]	24
4300175	103.40 [46.90]						8.0" [203]	4.0" [102]		12.0" [305]	40.0" [1016]	12
4300196	113.30 [51.39]						4.0" [102]	8.0" [203]		16.0" [406]	44.0" [1118]	12
4300176	128.10 [58.11]	4300172	165.0 lbs.	4300173	166.7 lbs.	10.00" [254]	8.0" [203]	4.0" [102]	9.75" [248]	24.0" [610]	52.0" [1321]	16
4300177	152.80 [69.31]						8.0" [203]	4.0" [102]		36.0" [914]	64.0" [1626]	20
4300178	186.50 [84.59]						8.0" [203]	4.0" [102]		48.0" [1219]	76.0" [1930]	24

◊ Add "M" to the end of the part number to specify wheel to have manual indicator.
* No longer available.
** See Bracket Section for more information.

 Amendments and errors reserved. © SAF-HOLLAND, Inc.

Simplex Lite Rotary Pull Exploded View

Replaced by Simplex SE



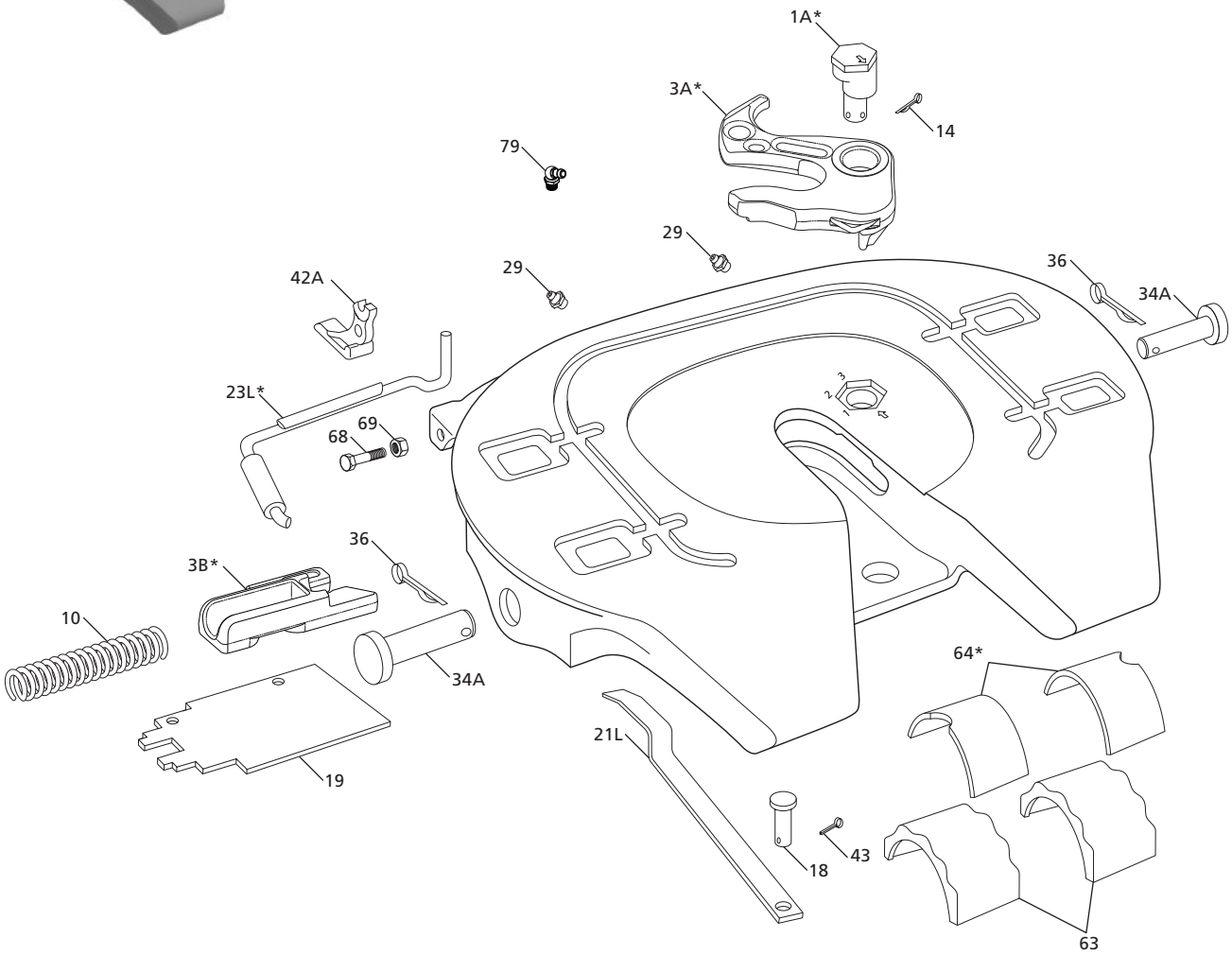

FOR MODELS WITH TOUCHLOC

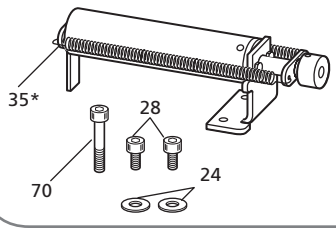

XL-FW10081PM-en-US Rev D 2016-03-01 Amendments and errors reserved. © SAF-HOLLAND, Inc.

SIMPLEX LITE PARTS LIST				
ITEM	DESCRIPTION	PART NUMBER	QTY.	WEIGHT LBS [KG]
1A*	Pin, Eccentric Jaw	4109916	1	1.87 [0.85]
3A*	Lock Jaw, See 4000501, 4000502 or 4000539	XA-4109939	1	8.48 [3.85]
3B*	Lock, Left-Hand, See 4000578	4109931	1	6.58 [2.98]
10	Spring, Lock	1200706	1	0.63 [0.29]
14	Pin, Cotter, .19" Dia. x 1.25" Long	9900170	1	0.01 [0.005]
18	Pin, Lever Bar	4000250	1	0.18 [0.08]
19	Plate, Cover	4100155	1	2.37 [1.08]
21L	Lever Bar, Left-Hand	4100372	1	2.53 [1.15]
23L*	Release Handle, Left-Hand with Automatic Indicator, See 4000531	4100386	1	1.70 [0.77]
24	Washer, .41" I.D. x .81" O.D., Hardened	9900174	2	0.01 [0.005]
28	HHCS, .38"-16 x .75" GR 5	9900182	2	0.04 [0.02]
29	Fittings, Grease, Left-Hand	84787	2	0.01 [0.005]
	Fittings, Grease, TouchLoc		1	0.01 [0.005]
34A	Pin, Bracket	5400705	2	3.25 [1.47]
35*	Cylinder Assembly, Air, See 4000272	4100421	1	6.80 [3.08]
36	Pin, Cotter, .38" Dia. x 1.50" Long	9900169	2	0.08 [0.04]
42A	Safety Indicator	4100374	1	0.51 [0.23]
43	Pin, Cotter, .13" Dia. x 1.25" Long	84261	1	0.01 [0.005]
63	Shoe, Bracket	4100328	2	0.69 [0.31]
64*	Insert, .38" Bracket, See 4000528 or 4000504	4100329	2	0.51 [0.23]
68	HHSB, .38"-16 x 2"	4100402	1	0.02 [0.01]
69	Lock Nut, .38"-16 Gr C	9900139	1	0.01 [0.005]
70	SHCS, .38"-16 x 2.5" Long	9900183	1	0.06 [0.03]
79	Fittings, Grease 65° x .38" Long	85496	1	0.01 [0.005]

*Not sold individually - must be purchased in kit.

NOTE: Replacement top plates no longer available.

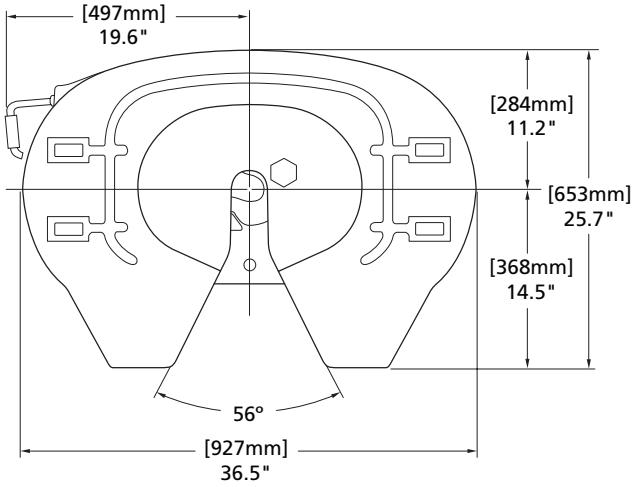

For Top Plate rebuild procedures, see Holland publication XL-FW460 at www.safholland.us

 Amendments and errors reserved. © SAF-HOLLAND, Inc.

Simplex Lite Rotary Pull Replacement Kits

SAF-HOLLAND Group

4000501
Rebuild, Jaw

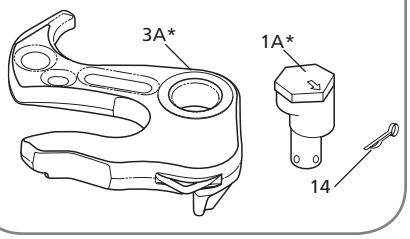

4000502
Rebuild, Jaw, Oversize

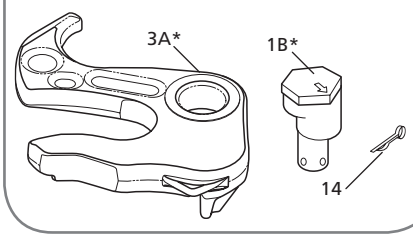

4000539
Jaw and return Spring Retrofit

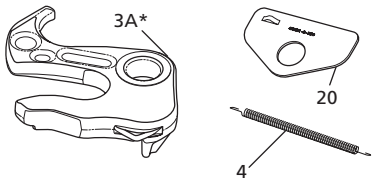

4000508
Release Handle, Left-Hand

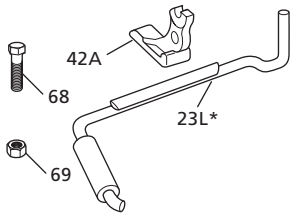

4000578
Lock, Standard

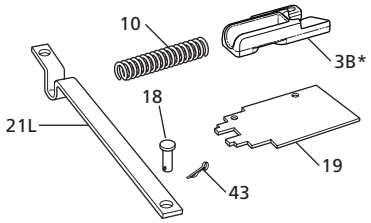

4000272
Air Cylinder for TouchLoc

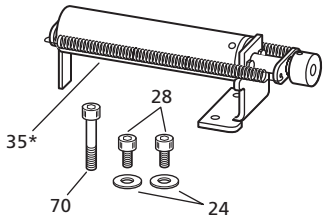

4000504
Bracket Connection, .38" Pads

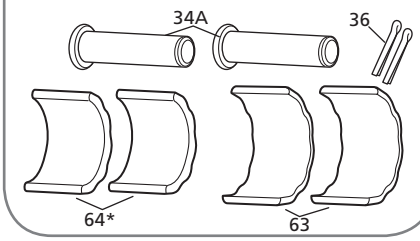

4000528
Bracket, .38" Pads - STD

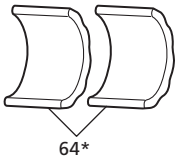

SIMPLEX LITE ROTARY PULL KIT PARTS LIST

ITEM	DESCRIPTION	PART NUMBER	QTY.	WEIGHT LBS [KG]
1A*	Pin, Eccentric Jaw	4109916	1	1.87 [0.85]
1B*	Pin, Eccentric Jaw, Oversized	4109977	1	1.90 [0.86]
3A*	Lock Jaw, Left-Hand	XA-4109939	1	8.48 [3.85]
3B*	Lock, Left-Hand	4109931	1	6.58 [2.98]
4	Spring, Jaw Ret. Simplex	1200101	1	0.10 [0.05]
10	Spring, Lock	1200706	1	0.63 [0.29]
14	Pin, Cotter, .19" Dia. x 1.25" Long	9900170	1	0.01 [0.005]
18	Pin, Lever Bar	4000250	1	0.18 [0.08]
19	Plate, Cover	4100155	1	2.37 [1.08]
20	Plate, Spring Retainer, Left-Hand	4100101	1	0.31 [0.14]
21L	Lever Bar, Left-Hand	4100372	1	2.53 [1.15]
23L*	Release Handle, Left-Hand with Automatic Indicator	4100386	1	1.70 [0.77]

SIMPLEX LITE ROTARY PULL KIT PARTS LIST

ITEM	DESCRIPTION	PART NUMBER	QTY.	WEIGHT LBS [KG]
24	Washer, .41" I.D. x .81" O.D., Hardened	9900174	2	0.01 [0.005]
28	HHCS, .38"-16 x .75" GR 5	9900182	2	0.04 [0.02]
34A	Pin, Bracket	5400705	2	3.25 [1.47]
35*	Cylinder Assembly, Air	4100421	1	6.80 [3.08]
36	Pin, Cotter, .38" Dia. x 1.50" Long	9900169	2	0.08 [0.04]
42A	Safety Indicator	4100374	1	0.51 [0.23]
43	Pin, Cotter, .13" Dia. x 1.25" Long	84261	1	0.01 [0.005]
63	Shoe, Bracket	4100328	2	0.69 [0.31]
64*	Insert, .38" Bracket	4100329	2	0.51 [0.23]
68	HHSB, .38"-16 x 2" Long	4100402	1	0.02 [0.01]
69	Lock Nut, .38"-16 GR C	9900139	1	0.01 [0.005]
70	SHCS, .38"-16 x 2.5" Long	9900183	1	0.06 [0.03]

*Not sold individually - must be purchased in kit.

XL-FW10081PM-en-US Rev D 2016-03-01 Amendments and errors reserved. © SAF-HOLLAND, Inc.

THIS PAGE INTENTIONALLY LEFT BLANK

 Amendments and errors reserved. © SAF-HOLLAND, Inc.

SAF-HOLLAND Group

Simplex Lite Rotary Pull with Bracket Head Castings Only

Discontinued - Replacement Parts Only



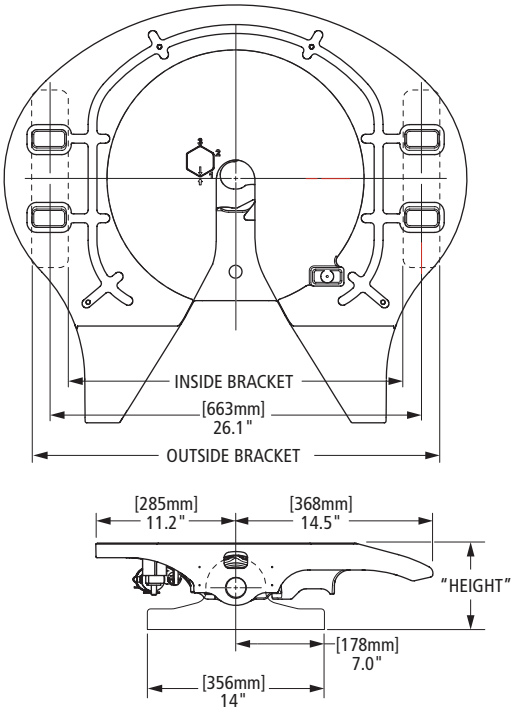

FW PART NUMBER	FW WEIGHT LB [KG]	BRACKET PART NUMBER+**	BRACKET HEIGHT IN [MM]	INSIDE BRACKET	OUTSIDE BRACKET	BRACKET WEIGHT LB [KG]
4019541	322.90 [146.46]	4109976	5.93" [151]	26.13" [664]	31.88" [810]	10.48 [4.75]
4019059	336.90 [152.82]	4109960	8.18" [208]			17.13 [7.77]
4019049	352.50 [159.89]	4109982	9.68" [246]	25.50" [648]	32.50" [826]	23.86 [10.82]

* No longer available.
\+ Only one bracket included in part number.
** See Bracket Section for more information.

XL-FW10081PM-en-US Rev D 2016-03-01 Amendments and errors reserved. © SAF-HOLLAND, Inc.

Simplex Lite Rotary Pull with Narrow Or Wide Flat Base Brackets

Discontinued - Replacement Parts Only



NARROW



WIDE

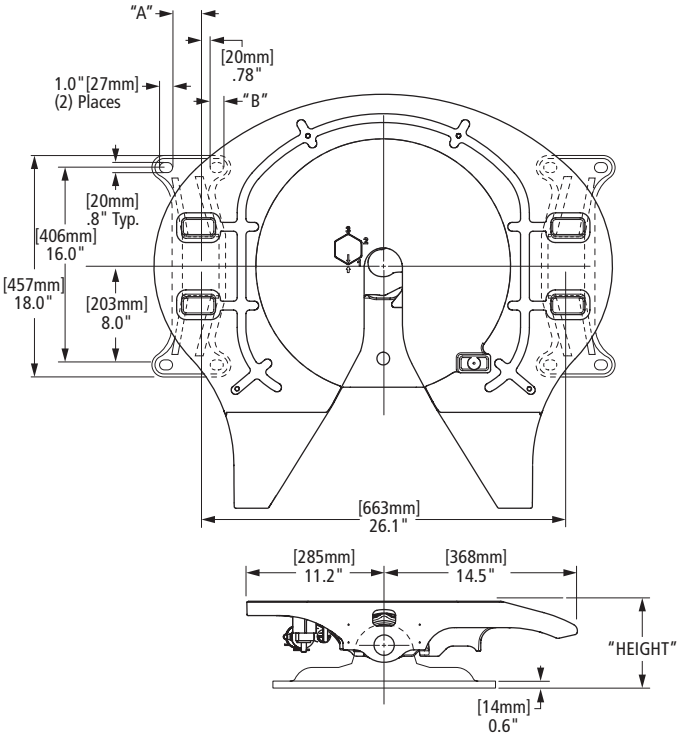

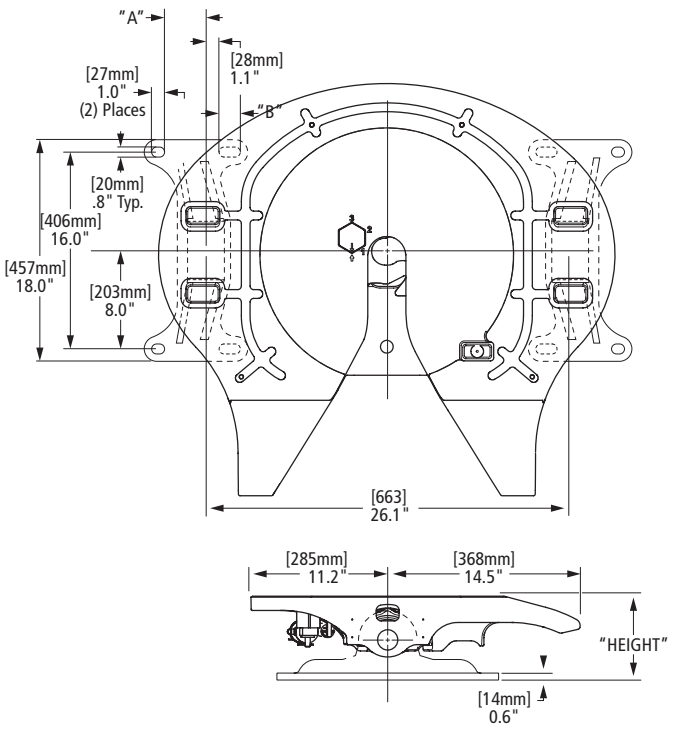

FW PART NUMBER	FW WEIGHT LB [KG]	BRACKET PART NUMBER+**	FLAT BASE TYPE	HEIGHT IN [MM]	A	B	BRACKET WEIGHT LB [KG]
4019486	352.21 [159.76]	4109839	Narrow	7.12" [181]	2.28" [58]	1.06" [27]	25.44 [11.54]
4019496	361.81 [164.11]	4109933	Wide	8.50" [216]	3.16" [80]	1.75" [44]	30.20 [13.70]

* No longer available.
\+ Only one bracket included in part number.
** See Bracket Section for more information.

 Amendments and errors reserved. © SAF-HOLLAND, Inc.

SAF-HOLLAND Group

Simplex Lite Rotary Pull with Cast Fabricated Brackets

Discontinued - Replacement Parts Only



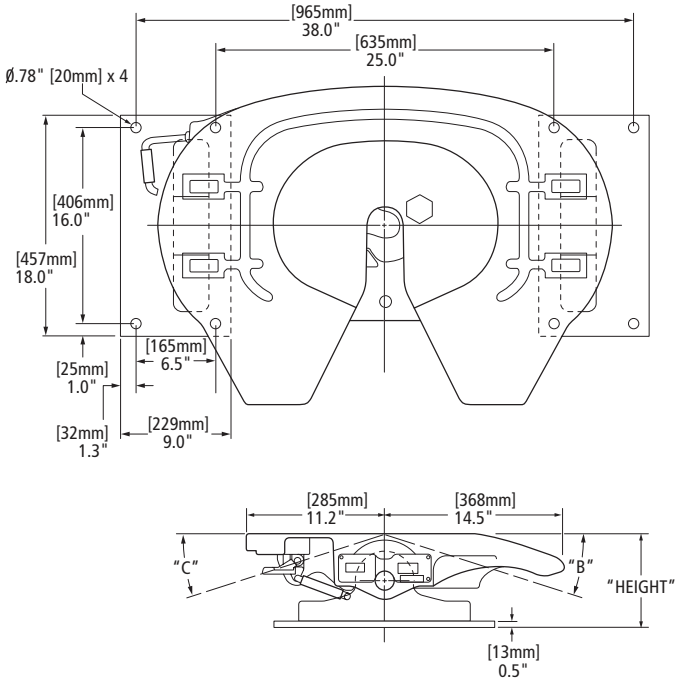

BRACKET PART NUMBER**+	HEIGHT IN [MM]	B	C	WEIGHT LBS [KG]
4000105	6.44" [164]	2.56" [65]	6.50" [165]	33.04 [14.99]
4009114	7.69" [195]	3.81" [97]	6.50" [165]	36.65 [16.62]
4009297	8.69" [221]	4.81" [102]	6.50" [165]	39.68 [18.00]

◊ Add "M" to the end of the part number to specify wheel to have manual indicator.
* No longer available.
+ Only one bracket included in part number.
** See Bracket Section for more information.

XL-FW10081PM-en-US Rev D 2016-03-01 Amendments and errors reserved. © SAF-HOLLAND, Inc.

Simplex Lite Rotary Pull with Flat Mounting Plate

Discontinued - Replacement Parts Only



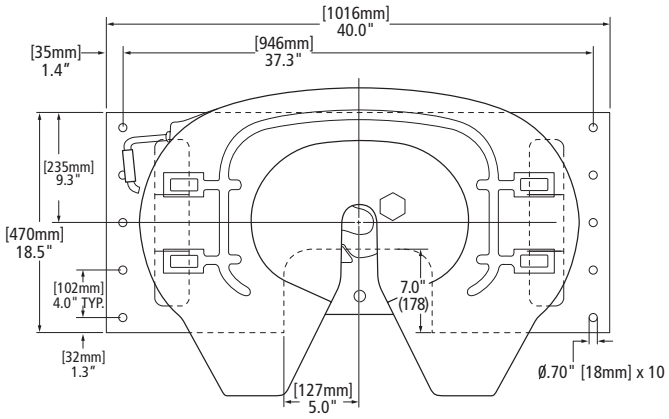

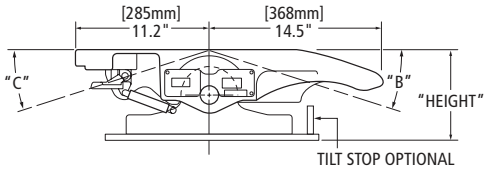

BRACKET PART NUMBER**	TILT STOPS	HEIGHT IN [MM]	WEIGHT LBS [KG]
4009866	Without Tilt Stops	6.00" [152]	92.20 [41.82]
4009867		6.31" [160]	92.50 [41.96]
4009868		7.56" [192]	99.72 [45.23]
4009822		8.56" [217]	105.79 [47.99]
4009869		9.06" [230]	110.06 [49.92]
4009823		10.06" [256]	119.26 [54.10]
4009747	With Tilt Stops	6.00" [152]	93.14 [42.25]
4009723		6.31" [160]	93.84 [42.57]
4009821		7.56" [192]	101.41 [46.00]

◊ Add "M" to the end of the part number to specify wheel to have manual indicator.
* No longer available.
+ Only one bracket included in part number.
** See Bracket Section for more information.

 Amendments and errors reserved. © SAF-HOLLAND, Inc.

SAF-HOLLAND Group

Simplex Lite Rotary Pull with Drop-Over Angle Bracket

Discontinued - Replacement Parts Only



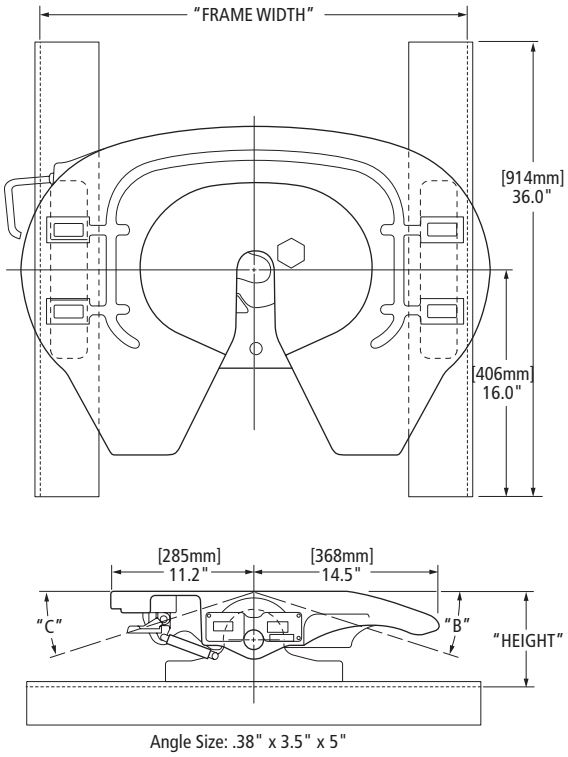

Angle Size: .38" x 3.5" x 5"

BRACKET PART NUMBER+**	HEIGHT IN [MM]	FRAME WIDTH IN [MM]
4101534	6.00" [152]	34.00" [864]
4101536	6.31" [160]	
4101538	7.56" [192]	
4101539	8.56" [217]	
4101540	9.06" [230]	
4101630	10.06" [256]	
4101734	6.00" [152]	33.50" [851]
4101736	6.31" [160]	
4101738	7.56" [192]	
4101739	8.56" [217]	
4101740	9.06" [230]	
4101830	10.06" [256]	
4101634	6.00" [152]	33.25" [845]
4101636	6.31" [160]	
4101638	7.56" [192]	
4101639	8.56" [217]	
4101640	9.06" [230]	
4101730	10.06" [256]	

◊ Add "M" to the end of the part number to specify wheel to have manual indicator.
* No longer available.
+ Only one bracket included in part number.
** See Bracket Section for more information.

XL-FW10081PM-en-US Rev D 2016-03-01 Amendments and errors reserved. © SAF-HOLLAND, Inc.

THIS PAGE INTENTIONALLY LEFT BLANK

 Amendments and errors reserved. © SAF-HOLLAND, Inc.

SAF-HOLLAND Group

Taperloc™ Slider with Simplex Lite Rotary Pull

Discontinued - Replacement Parts Only

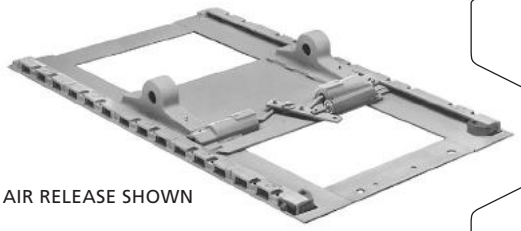

AIR RELEASE SHOWN

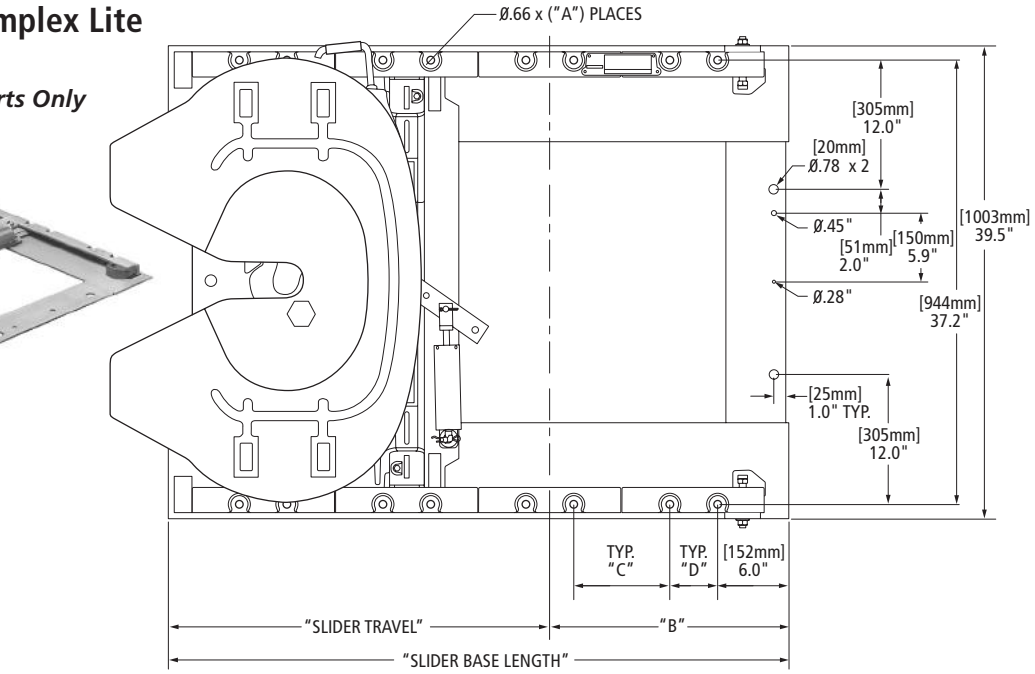

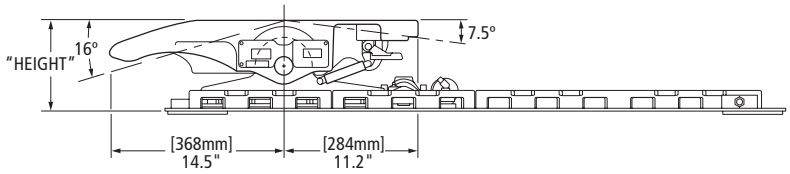

XL-FW10081PM-en-US Rev D 2016-03-01 Amendments and errors reserved. © SAF-HOLLAND, Inc.

Simplex Lite Rotary Pull Mounting Dimensions

SLIDE BASE PART NO.	SLIDE BASE WEIGHT LBS [KG]	AIR-BRACKET PART NO.	AIR- BRACKET PART WEIGHT LBS [KG]	MANUAL-BRACKET PART NO.	MANUAL-BRACKET WEIGHT LBS [KG]	"B" MAX FWD	C	D	HEIGHT IN [MM]	SLIDE TRAVEL IN [MM]	SLIDE BASE LENGTH	A # OF HOLES
4300175	103.40 [46.90]						8.0" [203]	4.0" [102]		12.0" [305]	40.0" [1016]	12
4300196	113.30 [51.39]						4.0" [102]	8.0" [203]		16.0" [406]	44.0" [1118]	12
4300176	128.10 [58.11]	4300165	144.30 [65.45]	4300204	146.10 [66.27]	8.00" [203]	8.0" [203]	4.0" [102]	6.81" [173]	24.0" [610]	52.0" [1321]	16
4300177	152.80 [69.31]						8.0" [203]	4.0" [102]		36.0" [914]	64.0" [1626]	20
4300178	186.50 [84.59]						8.0" [203]	4.0" [102]		48.0" [1219]	76.0" [1930]	24
4300175	103.40 [46.90]						8.0" [203]	4.0" [102]		12.0" [305]	40.0" [1016]	12
4300196	113.30 [51.39]						4.0" [102]	8.0" [203]		16.0" [406]	44.0" [1118]	12
4300176	128.10 [58.11]	4300166	148.10 [67.18]	4300205	149.90 [67.99]	10.00" [254]	8.0" [203]	4.0" [102]	7.75" [197]	24.0" [610]	52.0" [1321]	16
4300177	152.80 [69.31]						8.0" [203]	4.0" [102]		36.0" [914]	64.0" [1626]	20
4300178	186.50 [84.59]						8.0" [203]	4.0" [102]		48.0" [1219]	76.0" [1930]	24
4300175	103.40 [46.90]						8.0" [203]	4.0" [102]		12.0" [305]	40.0" [1016]	12
4300196	113.30 [51.39]						4.0" [102]	8.0" [203]		16.0" [406]	44.0" [1118]	12
4300176	128.10 [58.11]	4300167	151.90 [68.90]	4300206	153.70 [69.72]	10.00" [254]	8.0" [203]	4.0" [102]	8.75" [222]	24.0" [610]	52.0" [1321]	16
4300177	152.80 [69.31]						8.0" [203]	4.0" [102]		36.0" [914]	64.0" [1626]	20
4300178	186.50 [84.59]						8.0" [203]	4.0" [102]		48.0" [1219]	76.0" [1930]	24
4300175	103.40 [46.90]						8.0" [203]	4.0" [102]		12.0" [305]	40.0" [1016]	12
4300196	113.30 [51.39]						4.0" [102]	8.0" [203]		16.0" [406]	44.0" [1118]	12
4300176	128.10 [58.11]	4300172	165.00 [74.84]	4300173	166.70 [75.61]	10.00" [254]	8.0" [203]	4.0" [102]	9.75" [248]	24.0" [610]	52.0" [1321]	16
4300177	152.80 [69.31]						8.0" [203]	4.0" [102]		36.0" [914]	64.0" [1626]	20
4300178	186.50 [84.59]						8.0" [203]	4.0" [102]		48.0" [1219]	76.0" [1930]	24

◊ Add "M" to the end of the part number to specify wheel to have manual indicator.
* No longer available.
** See Bracket Section for more information.

 Amendments and errors reserved. © SAF-HOLLAND, Inc.

SAF-HOLLAND Group



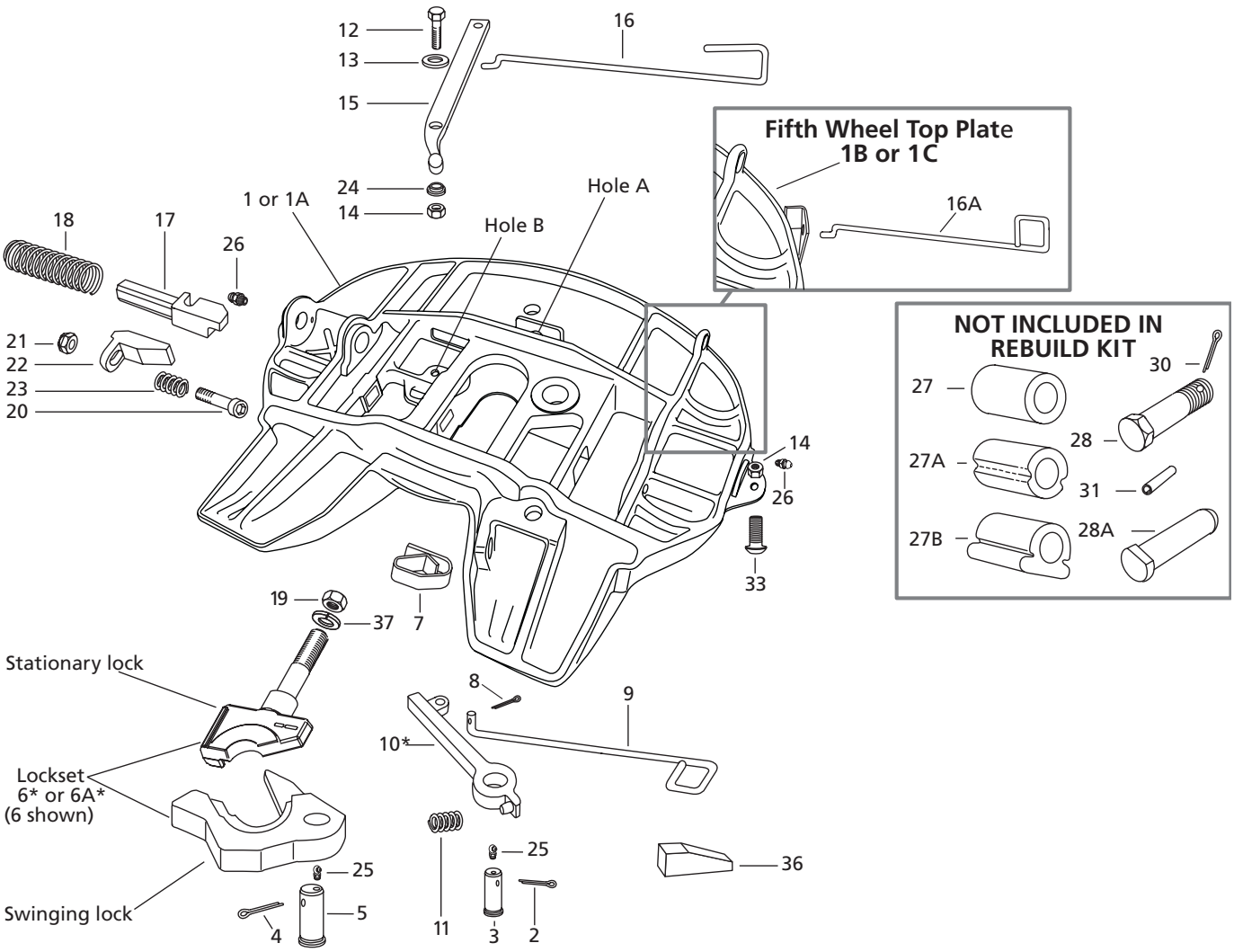

XL-FW10081PM-en-US Rev D 2016-03-01 Amendments and errors reserved. © SAF-HOLLAND, Inc.

FW0070 SERIES PARTS LIST				
ITEM	DESCRIPTION	PART NUMBER	QTY.	WEIGHT LBS [KG]
1	Fifth Wheel Top Plate For 2" Kingpin	XA-71-DAP	1	316.00 [143.34]
1A	Fifth Wheel Top Plate For 3.5" Kingpin	XA-71-OAP	1	312.00 [141.52]
1B	Fifth Wheel Top Plate - 2" Kingpin For FW2570-7103 Series or FW2570-7113 Series Only	XA-71-03706	1	307.81 [139.62]
1C	Fifth Whl. Top Plate - 3.5" Kingpin For FW2570-7103 or FW2570-7113 Series Only	XA-03711	1	281.50 [127.69]
2	Cotter Pin 0.25" x 2.0"	XB-5	1	0.05 [0.02]
3	Lock Pin	XA-1016-C	1	0.92 [0.42]
4	Cotter Pin 0.25" x 2.5"	XB-T-60	1	0.04 [0.02]
5	Lock Pin	XA-FW-108-D	1	2.37 [1.08]
5A	Lock Pin	XA-FW-108-D-15	1	
6*	Lock Set For 2" Kingpin	XA-FW-104-D	1	16.58 [7.52]
6A*	Lock Set For 3.5" Kingpin	XA-FW-104-03	1	13.85 [6.28]
7	Spring	XA-FW-128	1	0.57 [0.26]
8	Cotter Pin 1/8" x 1"	XB-16	1	0.01 [0.005]
9	Secondary Lock Release Handle	XA-FW-78	1	0.89 [0.40]
10*	Secondary Lock Arm	XA-FW-137-2	1	3.20 [1.45]
11	Spring	XB-1028-2	1	0.19 [0.09]
12	Hex Hd. Bolt 1/2" - 20 x 1.75"	XB-2083	1	0.13 [0.06]
13	Plain Washer	XB-T-49	1	0.04 [0.02]
14	Hex Lock Nut	XB-T-69-A	3	0.04 [0.02]
15	Release Lever	XA-1005-FH	1	1.98 [0.90]
16	Release Handle	XA-1117-H	1	1.97 [0.89]
16A	Release Handle	XA-03715	1	2.37 [1.08]
17	Plunger	XA-1104	1	3.09 [1.40]
18	Compression Spring (Red)	XB-1007	1	0.32 [0.15]
19	Jam Nut 1" - 14	XB-04473	1	0.13 [0.06]
20	Socket Head Cap Screw	XB-09407	1	0.40 [0.18]
21	Lock Nut 5/8" - 11	XB-HNH-58-C	1	0.08 [0.03]
22	Adjusting Wedge	XD-3123-1	1	1.18 [0.54]
23	Compression Spring	XB-403	1	0.07 [0.03]
24	Nylon Bushing	XB-02949	1	0.01 [0.005]
25	Lube Fitting (90°)	XB-0769	2	0.02 [0.01]
26	Lube Fitting	XB-H-38	2	0.01 [0.005]
*27	Bushing (Prior to 5/82)	XB-1604-9	2	0.53 [0.24]
27A	Bushing (5/82 - 9/87)	XB-0012-1	2	0.32 [0.15]
27B	Bushing (After 9/87)	XB-0012-3	2	0.54 [0.24]
28	Pivot Bolt (Prior to 11/86)	XA-2632	2	4.00 [1.81]
28A	Pivot Pin (After 11/86)	XE-02759	2	4.06 [1.84]
29	Nut (Prior to 11/86) (Not Shown)	XB-T-9N-2	2	N/A
30	Cotter Pin (Prior to 11/86)	XB-T-60	2	0.04 [0.02]
31	Roll Pin	XB-21-S-375-1750	2	0.02 [0.01]
33	Socket Button Head Cap Screw	XB-08002	2	0.04 [0.02]
36	Adjusting Block	XA-05768-1	1	0.74 [0.34]
38				

* Not sold individually. Must be purchased in kit

REPLACEMENT TOP PLATE PART NUMBERS			
DESCRIPTION	PART NUMBER	KINGPIN LOCK	WEIGHT LBS [KG]
Left Hand Release	XA-71-DAP	2.0"	316.00 [143.33]
Right Hand Release	XA-71-OAP	3.5"	316.00 [143.33]

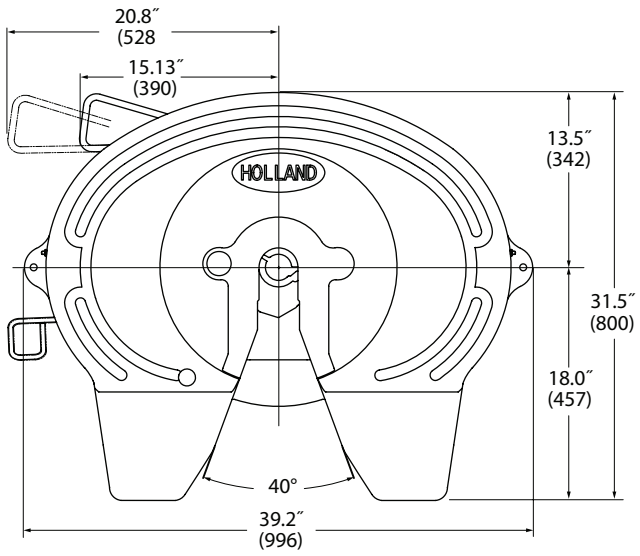

 Amendments and errors reserved. © SAF-HOLLAND, Inc.

RK-65014
Complete Rebuild Kit - XA-71-DA (2.0" Kingpin)

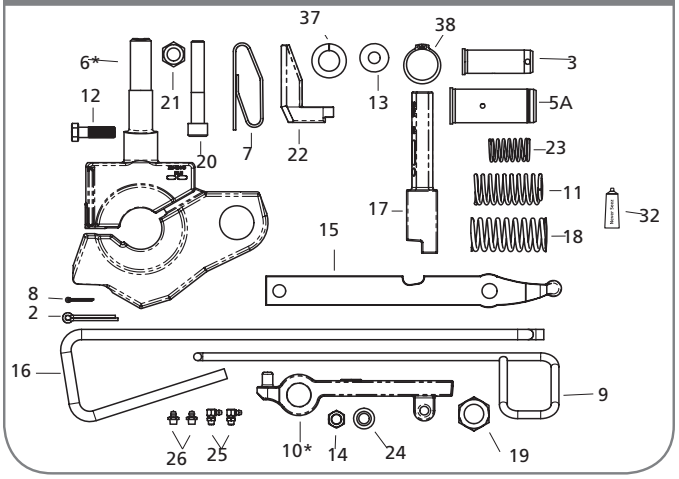

RK-65014-1
Complete Rebuild Kit - XA-71-DA-03705 (2.0" Kingpin)

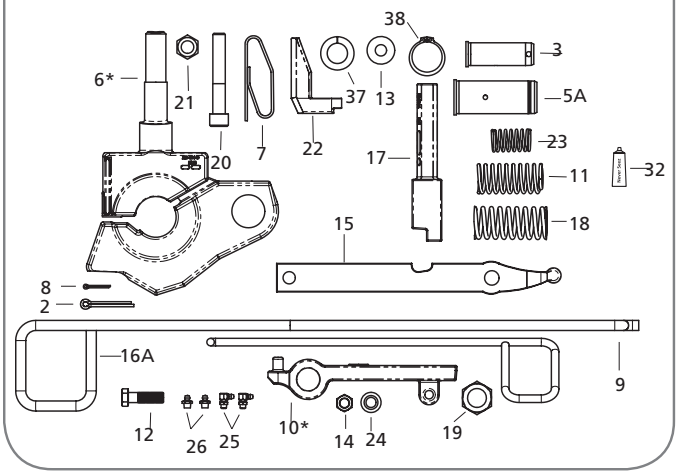

RK-65015
Complete Rebuild Kit - XA-71-OA (3.5" Kingpin)

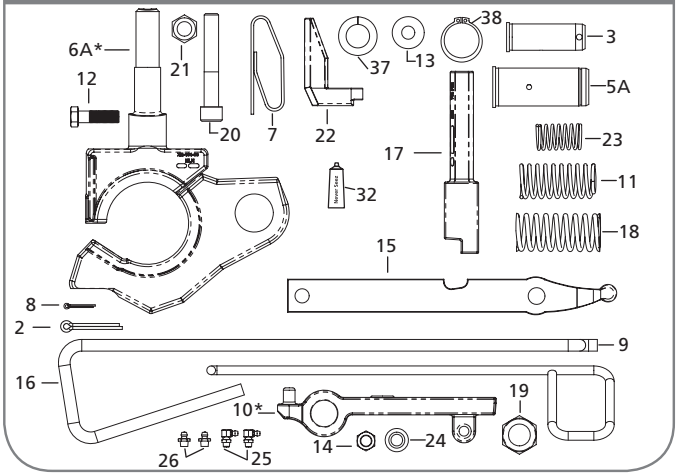

RK-65015-1
Complete Rebuild Kit - XA-71-OA-03713 (3.5" Kingpin)

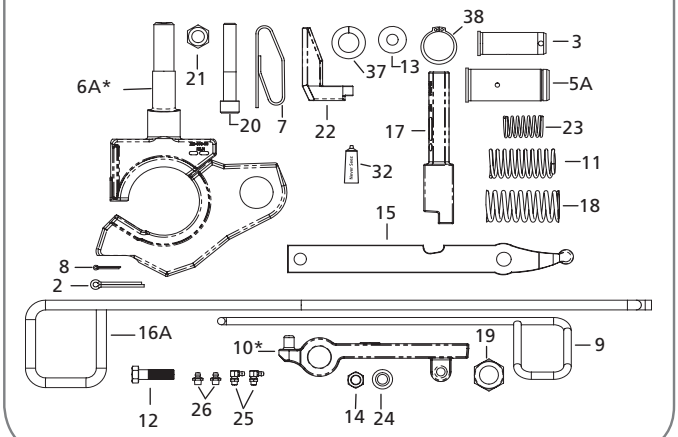

RK-65024
Kit, Lock (XA-71-DA)

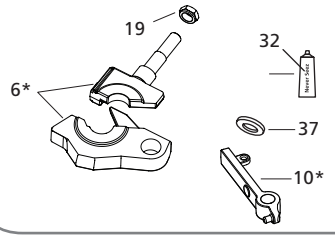

RK-65024-1
Kit, Lock (3.5")

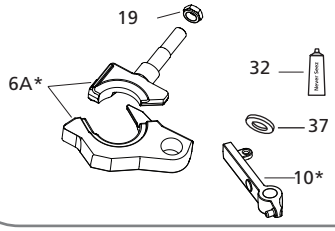

RK-65025
Kit, H.D. Secondary Lock

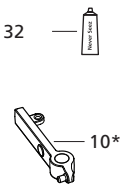

XL-FW10081PM-en-US Rev D 2016-03-01 Amendments and errors reserved. © SAF-HOLLAND, Inc.

XA-1117-H
Handle, Release

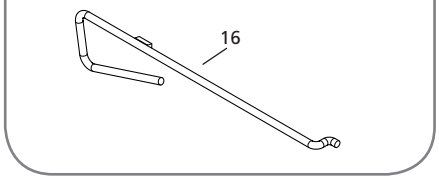

XA-03715
Handle, Release

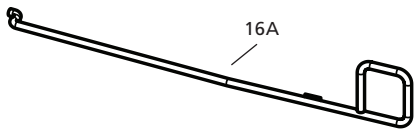

FW0070 KIT PARTS LIST

ITEM	DESCRIPTION	PART NUMBER	QTY.	WEIGHT LBS [KG]
2	Cotter Pin 0.25" x 2.0"	XB-5	1	0.05 [0.02]
3	Lock Pin	XA-1016-C	1	0.92 [0.42]
4	Cotter Pin 0.25" x 2.5"	XB-T-60	1	0.04 [0.02]
5A	Lock Pin	XA-FW-108-D-15	1	
6*	Lock Set For 2" Kingpin	XA-FW-104-D	1	16.58 [7.52]
6A*	Lock Set For 3.5" Kingpin	XA-FW-104-D	1	13.85 [6.28]
7	Spring	XA-FW-128	1	0.57 [0.26]
8	Cotter Pin 1/8" x 1"	XB-16	1	0.01 [0.005]
9	Secondary Lock Release Handle	XA-FW-78	1	0.89 [0.40]
10*	Secondary Lock Arm	XA-FW-137-2	1	3.20 [1.45]
11	Spring	XB-1028-2	1	0.19 [0.09]
12	Hex Hd. Bolt 1/2" - 20 x 1.75"	XB-2083	1	0.13 [0.06]
13	Plain Washer	XB-T-49	1	0.04 [0.02]
14	Hex Lock Nut	XB-T-69-A	3	0.04 [0.02]
15	Release Lever	XA-1005-FH	1	1.98 [0.90]
16	Release Handle	XA-1117-H	1	1.97 [0.89]
16A	Release Handle	XA-03715	1	2.37 [1.08]
17	Plunger	XA-1104	1	3.09 [1.40]
18	Compression Spring (Red)	XB-1007	1	0.32 [0.15]

FW0070 KIT PARTS LIST

ITEM	DESCRIPTION	PART NUMBER	QTY.	WEIGHT LBS [KG]
19	Jam Nut 1" - 14	XB-04473	1	0.13 [0.06]
20	Socket Head Cap Screw	XB-09407	1	0.40 [0.18]
21	Lock Nut 5/8" - 11	XB-HNH-58-C	1	0.08 [0.03]
22	Adjusting Wedge	XD-3123-1	1	1.18 [0.54]
23	Compression Spring	XB-403	1	0.07 [0.03]
24	Nylon Bushing	XB-02949	1	0.01 [0.005]
25	Lube Fitting (90°)	XB-0769	2	0.02 [0.01]
26	Lube Fitting	XB-H-38	2	0.01 [0.005]
32	Never-Seez, 7.5g Tube	XB-02967		N/A
37	Washer, Lock 1.0"	XB-10327	1	
38	Ring, Retaining	XB-09153	1	

* Not sold individually. Must be purchased in kit

 Amendments and errors reserved. © SAF-HOLLAND, Inc.

SAF-HOLLAND Group

FW0070 Stationary Foot Mount



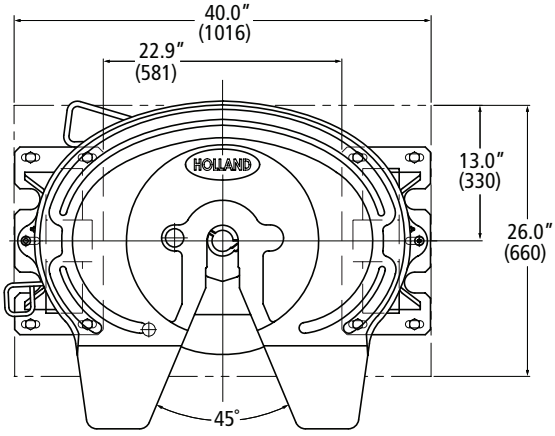

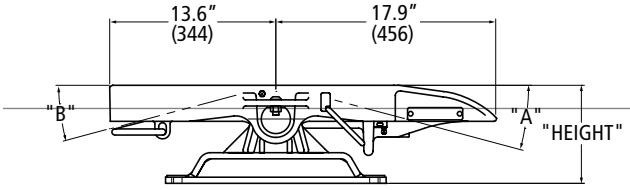

PART NUMBER	HEIGHT iN [MM]	A	B	REPLACEMENT BRACKETS	WEIGHT LBS [KG]
FW0070-7603XL	7.0″ [177]	12°	11°	XA-7603	412.00 [186.88]
FW0070-7602XL	8.0″ [203]	15°	15°	XA-7602	419.00 [190.06]
FW0070-7601XL	9.0″ [229]	15°	15°	XA-7601	421.00 [190.96].

Corrugated Plate Option adds .9″ to height.

A flat or corrugated mounting plate is required for foot mount brackets.

FW0070 Stationary Integrated Plate Mount



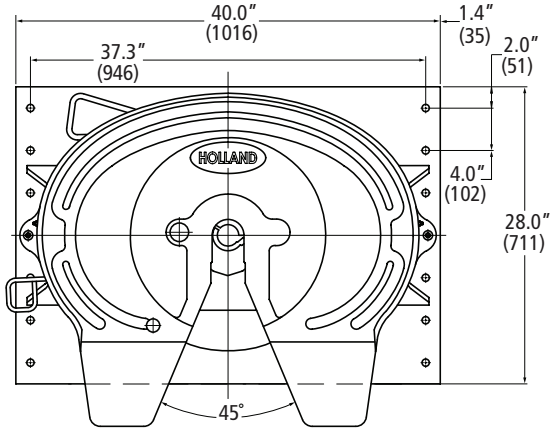

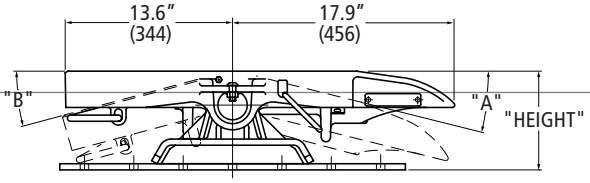

PART NUMBER	HEIGHT iN [MM]	A	B	REPLACEMENT BRACKET	WEIGHT LBS [KG]
FW0070-7685XL	7.0″ [177]	11°	6°	XA-7685	533.00 [241.77]
FW0070-7684XL	8.0″ [203]	14°	15°	XA-7684	539.00 [244.49]
FW0070-7683XL	9.0″ [229]	15°	15°	XA-7683	542.00 [245.85]

XL-FW10081PM-en-US Rev D 2016-03-01 Amendments and errors reserved. © SAF-HOLLAND, Inc.

FW0070 Stationary Brackets for Angle Mounting



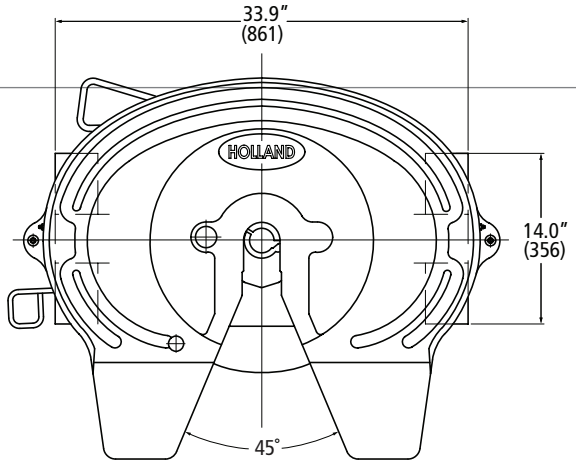

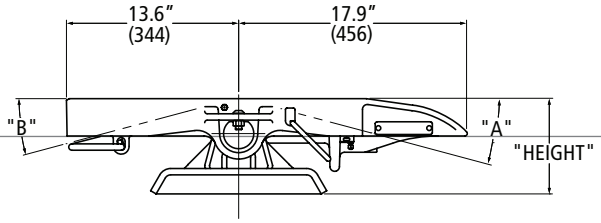

PART NUMBER	HEIGHT iN [MM]	A	B	REPLACEMENT BRACKET	WEIGHT LBS [KG]
FW0070-7623XL	6.5″ [165]	12°	11°	XA-7623	373.00 [169-19]
FW0070-7622XL	7.5″ [191]	15°	15°	XA-7622	380.00 [172.37]
FW0070-7621XL	8.5″ [216]	15°	15°	XA-7621	382.00 [173.27]

FW0070 Stationary Brackets with Angle Mounting

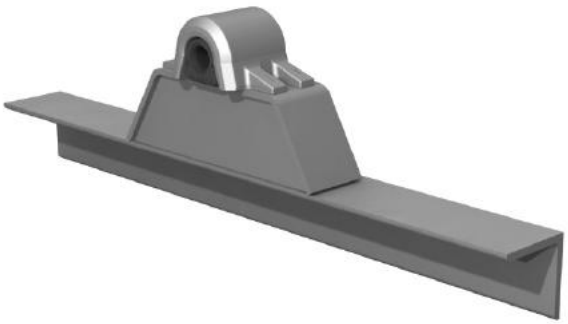

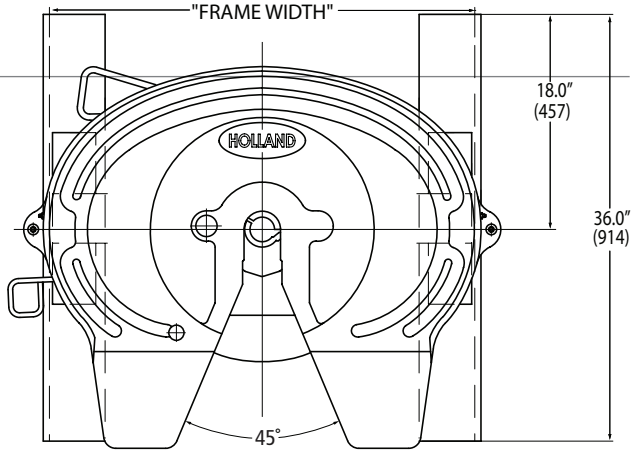

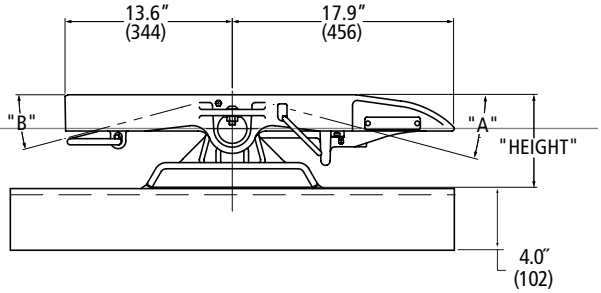

PART NUMBER	HEIGHT iN [MM]	A	B	REPLACEMENT BRACKET	WEIGHT LBS [KG]
FW0070-7614GL	6.0″ [152]	8°	5°	XA-7614-G	441.00 [200.03].
FW0070-7613GL	7.0″ [177]	12°	11°	XA-7613-G	450.00 [204.12]
FW0070-7612GL	8.0″ [203]	15°	15°	XA-7612-G	457.00 [207.29]
FW0070-7611GL	9.0″ [229]	15°	15°	XA-7611-G	459.00 [208.20]

FRAME WIDTH	CODE	FRAME WIDTH	CODE	FRAME WIDTH	CODE
33.25" [845]″	A	33.75" [857]″	E	34.25" [870]″	J
33.38" [848]	B	33.88" [861]″	F	34.38" [873]″	K
33.50" [851]	C	34.00" [864]″	G	34.50" [876]″	L
33.62" [854]″	D	34.12" [867]″	H		

 Amendments and errors reserved. © SAF-HOLLAND, Inc.



DISCONTINUED MODEL
SERVICE PARTS ONLY
Please contact Customer Service
for part availability
888.396.6501

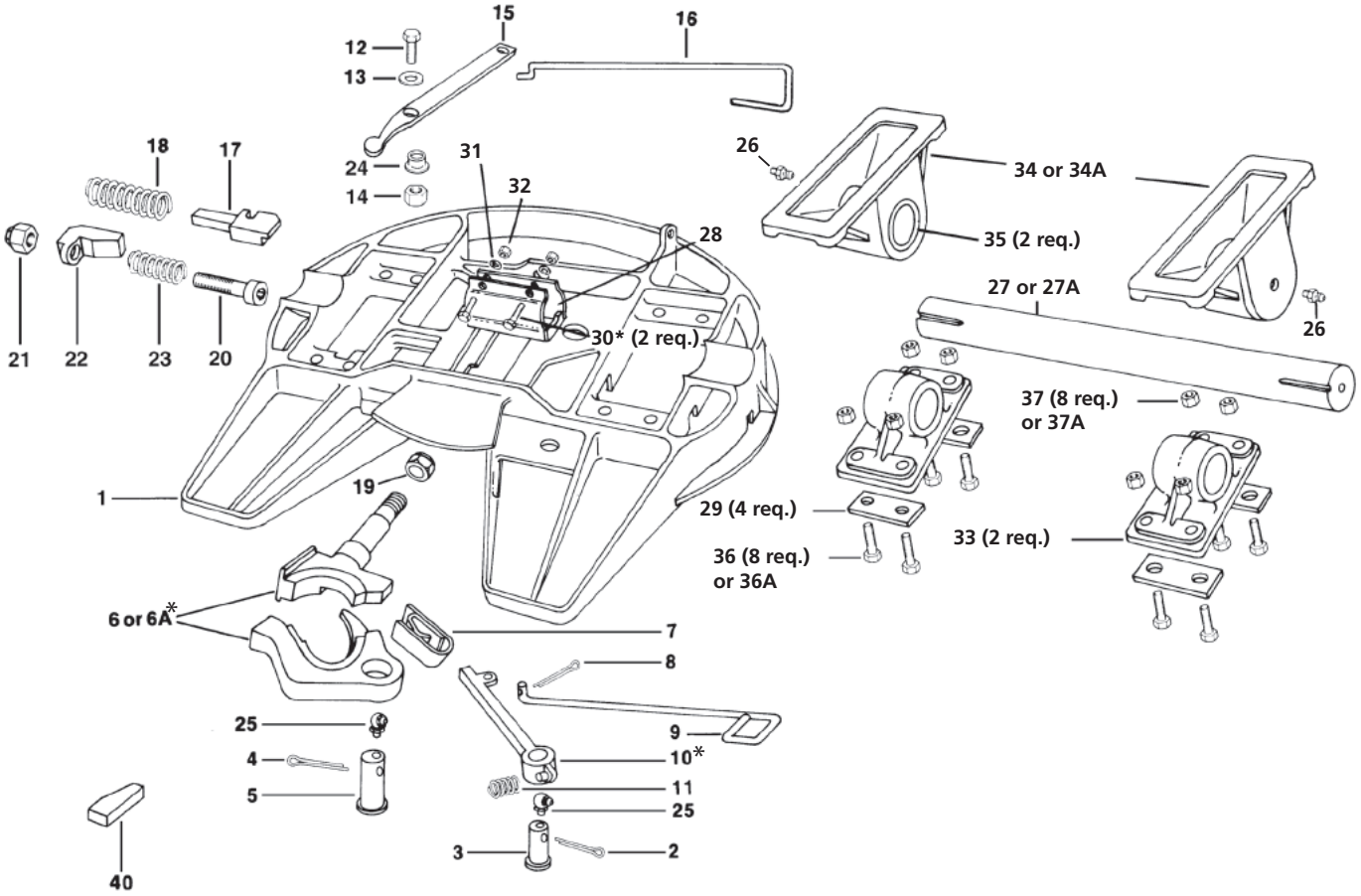

XL-FW10081PM-en-US Rev D 2016-03-01 Amendments and errors reserved. © SAF-HOLLAND, Inc.

FW0100/FW0165 SERIES PARTS LIST

ITEM	DESCRIPTION	PART NUMBER	QTY.	WEIGHT LBS [KG]
1	Fifth Wheel Top Plate – 2" Kingpin – For FW0100	XA-101-D	1	314.00 [142.43]
1A	Fifth Wheel Top Plate – 3-1/2" Kingpin – For FW0100	XA-101-O	1	310.00 [140.61]
1B	Fifth Wheel Top Plate – 2" Kingpin – For FW0165	XA-0115-1	1	373.49 [169.41]
1C	Fifth Wheel Top Plate – 3-1/2" Kingpin – For FW0165	XA-0115	1	370.70 [168.15]
2	Cotter Pin 1/4" x 2"	XB-5	1	0.05 [0.02]
3	Lock Pin	XA-1016-C	1	0.92 [0.42]
4	Cotter Pin 1/4" x 2-1/2"	XB-T-60	1	0.04 [0.02]
5	Lock Pin	XA-FW-108-D-1	1	2.33 [1.06]
6	Lock Set For 2" Kingpin	XA-FW-104-D	1	16.58 [7.52]
6A	Lock Set For 3-1/2" Kingpin	XA-FW-104-03	1	13.85 [6.28]
7	Spring	XA-FW-128	1	0.57 [0.26]
8	Cotter Pin 1/8" x 1"	XB-16	1	0.01 [0.005]
9	Release Handle	XA-FW-138	1	0.89 [0.40]
10	Secondary lock arm	XA-FW-137-2	1	3.20 [1.45]
11	Spring	XB-1028-2	1	0.19 [0.09]
12	Hex Head Cap Screw 1/2" - 20 x 1-3/4"	XB-2083	1	0.13 [0.06]
13	Plain Washer	XB-T-49	1	0.04 [0.02]
14	Hex Lock Nut 1/2" - 20	XB-T-69-A	1	0.04 [0.02]
15	Release Lever	XA-1005-FDS	1	1.95 [0.88]
15A	Release Lever	XA-1005-FD-3	1	
16	Release Handle	XA-1117-13	1	1.84 [0.83]
17	Plunger	XA-1104	1	3.09 [1.40]
17A	Plunger	XA-1104-1	1	
18	Compression Spring (Red)	XB-1007	1	0.32 [0.15]
19	Jam Nut 1" - 14	XB-04473	1	0.13 [0.06]
20	Socket Head Cap Screw	XB-2001	1	0.42 [0.19]
21	Lock Nut 5/8" - 11	XB-HNH-58-C	1	0.08 [0.03]
22	Adjusting Wedge	XD-3123-1	1	1.18 [0.54]
23	Compression Spring	XB-403	1	0.07 [0.03]
24	Bushing	XB-02949	1	0.01 [0.005]
25	Lube Fitting (45°)	XB-767-C	2	0.01 [0.005]
26	Lube Fitting	XB-H-38	2	0.01 [0.005]
27	Trunnion Shaft – FW0100	XA-FW-106	1	55.61 [25.22]
27A	Trunnion Shaft – FW0165	XA-0114	1	56.00 [25.40]
28	Trunnion Shaft Clamp	XA-FW-113-D	2	4.20 [1.91]
29	Shims	XB-03371	4	0.10 [0.05]
30	Hex Bolt 3/4" - 16 x 3	XB-772	2	0.45 [0.20]
31	Washer – FW0100	XB-PW-1316-112	2	0.04 [0.02]
32	Nut 3/4" - 16 – FW0100	XB-769	2	0.12 [0.05]
33	Trunnion Shaft Bracket	XA-FW-103	2	31.30 [14.20]
34	Mounting Bracket – 10" Height	XA-FW-102	2	44.70 [20.28]
34A	Mounting Bracket – 9" Height	XA-FW-102-C	2	42.49 [19.27]
35	Bushing	XA-FW-107	2	2.46 [1.12]
36	Bolt 7/8"-14 x 4" (After 8/97 Check Hole Size)	XB-08914	8	0.90 [0.41]
37	Lock nut 7/8"-14 (After 8/97 Check Hole Size)	XB-T-307	8	0.19 [0.09]
36A	Hex Head Cap Bolt 1"-8 x 4" (Prior to 8/97)	XB-FW-109	8	1.10 [0.50]
37A	Lock Nut 1"-8 (Prior to 8/97)	XB-C-41	8	0.27 [0.12]
38	Kingpin Gage	TF-0110	1	0.48 [0.22]
39	2" Kingpin Lock Tester	TF-TLN-5001	1	22.40 [10.16]
39A	3-1/2" Kingpin Lock Tester	TF-TLN-1500	1	31.10 [14.11]
40	Adjusting Block	XA-05768	1	0.44 [0.20]
42A	Safety Indicator	4100374	1	0.51 [0.23]

* Not sold individually - must be purchased in kit

REPLACEMENT TOP PLATE PART NUMBERS

DESCRIPTION	PART NUMBER	KINGPIN LOCK	WEIGHT LBS [KG]
FW0100	XA-101-DAS	2.0"	350.00 [158.76]
FW0100	XA-101-OAS	3.5"	350.00 [158.76]
FW0165	XA-0116-1S	2.0"	471.00 [213.64]
FW0165	XA-0116S	3.5"	471.00 [213.64]

 Amendments and errors reserved. © SAF-HOLLAND, Inc.

RK-65012-1
Complete Rebuild - XA-101-DA/XA-0116-1

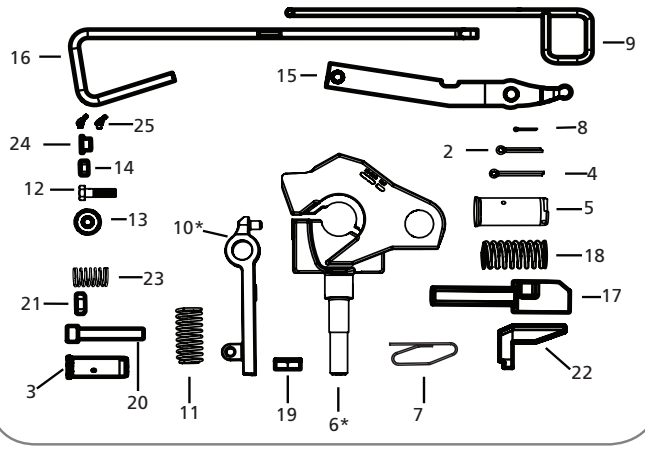

RK-65013-1
Complete Rebuild - XA-101-DA/XA-0116-1

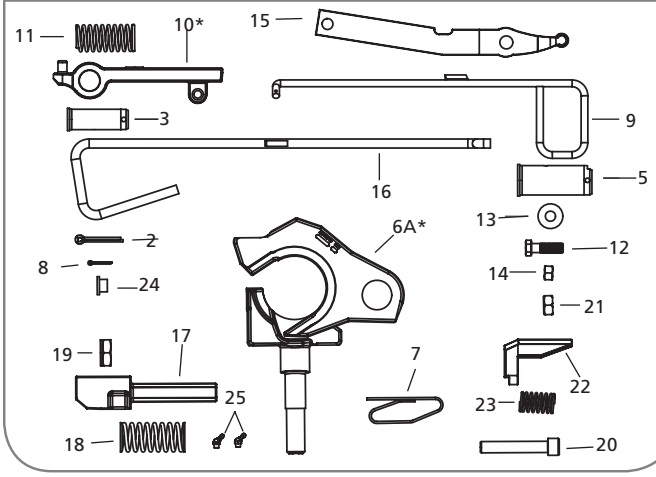

RK-65024
Kit, Lock 2" - XA-71-DA, XA-101-DA

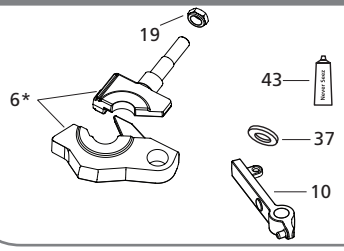

RK-65024-1
Kit, Lock 3.5"

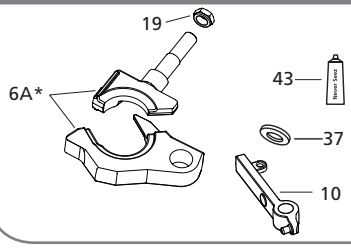

RK-65025
Kit, H.D. Secondary Lock

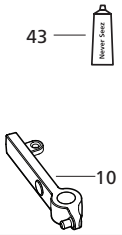

XA-1117-13
Handle, S/A Release

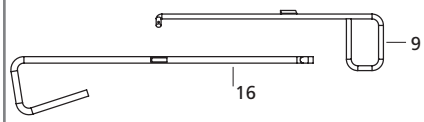

XL-FW10081PM-en-US Rev D 2016-03-01 Amendments and errors reserved. © SAF-HOLLAND, Inc.

FW0100/FW0165 SERIES KIT PARTS LIST				
ITEM	DESCRIPTION	PART NUMBER	QTY.	WEIGHT LBS [KG]
2	Cotter Pin 1/4" x 2"	XB-5	1	0.05 [0.02]
3	Lock Pin	XA-1016-C	1	0.92 [0.42]
4	Cotter Pin 1/4" x 2-1/2"	XB-T-60	1	0.04 [0.02]
5	Lock Pin	XA-FW-108-D-1	1	2.33 [1.06]
6	Lock Set For 2" Kingpin	XA-FW-104-D	1	16.58 [7.52]
6A	Lock Set For 3-1/2" Kingpin	XA-FW-104-03	1	13.85 [6.28]
7	Spring	XA-FW-128	1	0.57 [0.26]
8	Cotter Pin 1/8" x 1"	XB-16	1	0.01 [0.005]
9	Release Handle	XA-FW-138	1	0.89 [0.40]
10	Secondary lock arm	XA-FW-137-2	1	3.20 [1.45]
11	Spring	XB-1028-2	1	0.19 [0.09]
12	Hex Head Cap Screw 1/2" - 20 x 1-3/4"	XB-2083	1	0.13 [0.06]
13	Plain Washer	XB-T-49	1	0.04 [0.02]
14	Hex Lock Nut 1/2" - 20	XB-T-69-A	1	0.04 [0.02]
15	Release Lever	XA-1005-FDS	1	1.95 [0.88]
15A	Release Lever	XA-1005-FD-3	1	
16	Release Handle	XA-1117-13	1	1.84 [0.83]
17	Plunger	XA-1104	1	3.09 [1.40]
17A	Plunger	XA-1104-1	1	
18	Compression Spring (Red)	XB-1007	1	0.32 [0.15]
19	Jam Nut 1" - 14	XB-04473	1	0.13 [0.06]
20	Socket Head Cap Screw	XB-2001	1	0.42 [0.19]
21	Lock Nut 5/8" - 11	XB-HNH-58-C	1	0.08 [0.03]
22	Adjusting Wedge	XD-3123-1	1	1.18 [0.54]
23	Compression Spring	XB-403	1	0.07 [0.03]
24	Bushing	XB-02949	1	0.01 [0.005]
25	Lube Fitting (45º)	XB-767-C	2	0.01 [0.005]
37	Lock nut 7/8"-14 (After 8/97 Check Hole Size)	XB-T-307	8	0.19 [0.09]
43	Never-Seez, 7.5g Tube	XB-02967	1	N/A

*Not sold individually - must be purchased in kit.

 Amendments and errors reserved. © SAF-HOLLAND, Inc.

SAF-HOLLAND Group

FW0100 Stationary Mount



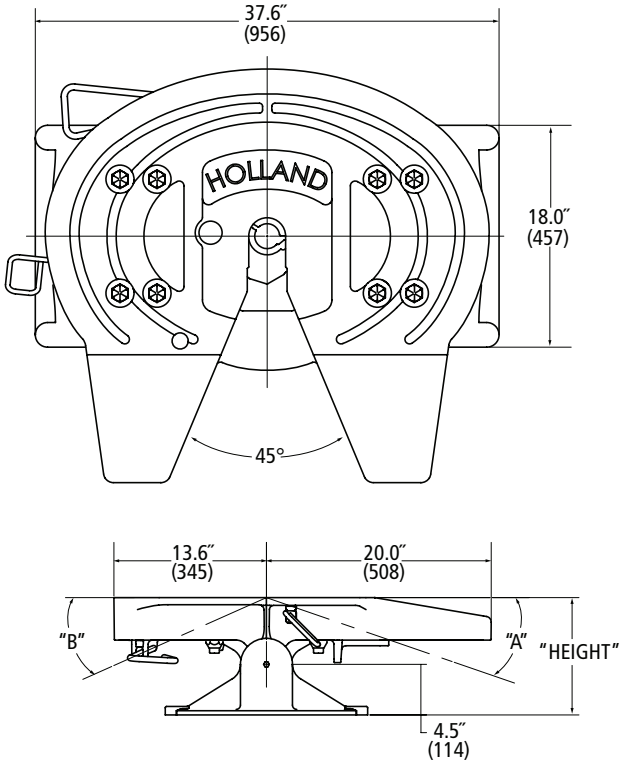

PART NUMBER	HEIGHT IN [MM]	A	B	WEIGHT
FW0100-DC	9.0″ [229]	15°	16°	590 lbs.
FW0100-D	10.5″ [267]	19°	24°	595 lbs.

FW0165 Stationary Mount



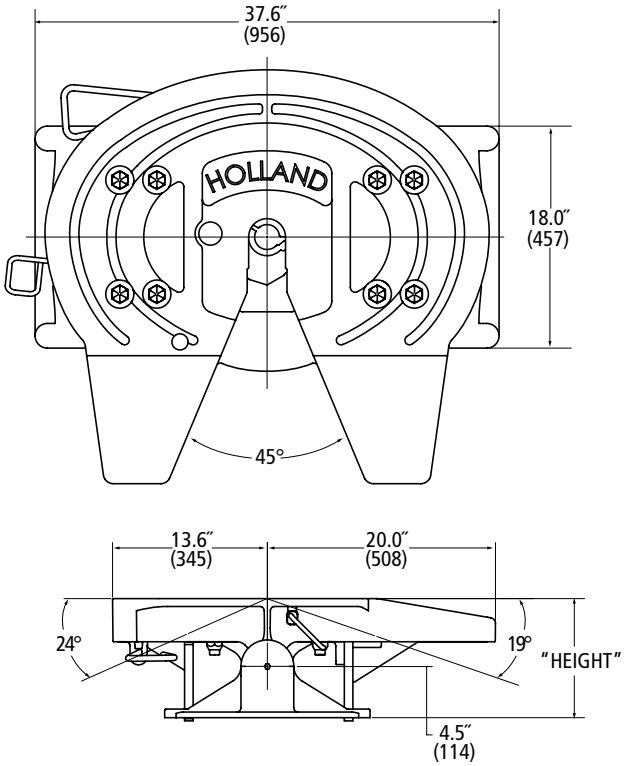

PART NUMBER	HEIGHT IN [MM]	WEIGHT
FW0165-0091-1	10.5″ [267]	650.00 [294.83]

XL-FW10081PM-en-US Rev D 2016-03-01 Amendments and errors reserved. © SAF-HOLLAND, Inc.

THIS PAGE INTENTIONALLY LEFT BLANK

 Amendments and errors reserved. © SAF-HOLLAND, Inc.



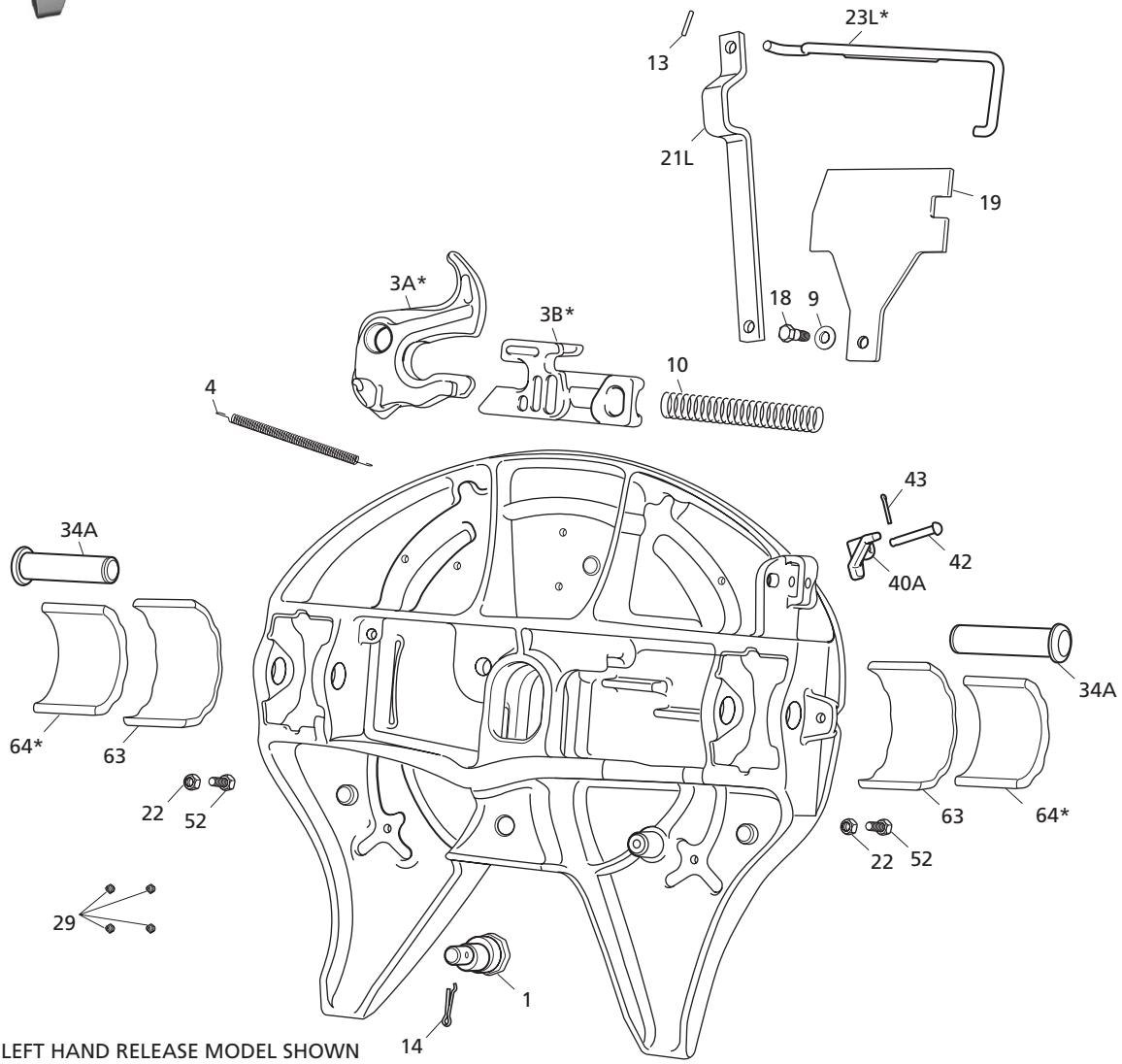

LEFT HAND RELEASE MODEL SHOWN
W/ AUTOMATIC INDICATOR

For Models With Manual Indicator

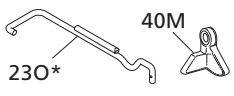

For Air Release Option

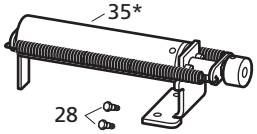

XL-FW10081PM-en-US Rev D 2016-03-01 Amendments and errors reserved. © SAF-HOLLAND, Inc.

ITEM	DESCRIPTION	PART NUMBER	QTY.	WEIGHT LBS [KG]
1	Eccentric Jaw Pin	4109922-P	1	1.93 [0.88]
3A*	Lock Jaw, Left-Hand See 4000644	XA-4109939	1	8.48 [3.85]
3B*	Lock, Left Hand, See 4000647	4109931	1	6.58 [2.98]
3AR*	Lock Jaw, Right Hand (Not Shown)	4109940	1	8.25 [3.74]
3BR*	Lock, Right Hand (Not Shown)	4109808	1	6.59 [2.99]
4	Spring, Jaw Return	1200101	1	0.10 [0.05]
9	Washer, .66" I.D. x 1.31" O.D.	XB-T-199	1	0.03 [0.01]
10	Spring, Lock	1200706	1	0.63 [0.29]
13	Pin, Spring, .19" Dia. x 1.15" Long	9900181	1	0.01 [0.005]
14	Pin, Cotter, .19" Dia. x 1.25" Long	9900170	1	0.01 [0.005]
18	HHSB, .50"-13 x 1.88" Gr 5	XB-11127	1	0.16 [0.07]
19	Plate, Cover	XA-10969	1	4.03 [1.83]
21L	Lever Bar	4100373	1	2.69 [1.22]
22	Lock Nut, .50"-20 Gr C, Cam Plates, Bracket Pins , Air Release	XB-T-69-A	2	0.04 [0.02]
23L*	Release Handle, Left-Hand with Automatic Indicator, See 4000531	4100420	1	1.46 [0.66]
23O*	Release Handle, Left-Hand for Manual Indicator, See 4000650	4100332	1	1.31 [0.59]
28	HHCS, .38"-16 x 1.50" GR 8	85617	2	0.06 [0.03]
29	Fittings, Grease	XB-H-38	4	0.01 [0.005]
34A	Pin, Bracket	5400705	2	3.25 [1.47]
35*	Air Cylinder Assembly, See 4100269	4100284	1	11.00 [4.99]
40A	Lock Indicator, Left-Hand Automatic	4100294	1	0.55 [0.25]
40M	Lock Indicator, Left-Hand Manual	4101250	1	0.66 [0.30]
42	Pin, Indicator	5400711	1	0.18 [0.08]
43	Pin, Cotter, .13" Diameter x 1.25" Long	84261	1	0.01 [0.005]
52	HHCS, .50"-20 x 1.25" Gr 5	XB-C-95	2	0.11 [0.05]
63	Shoe, Bracket	4100328	2	0.69 [0.31]
64*	Insert, .38" Bracket, See 4000528 or 4000504	4100329	2	0.51 [0.23]

REPLACEMENT TOP PLATE PART NUMBERS	
PART NUMBER	DESCRIPTION
4102720	LH Manual Release - Auto Indicator
4102727	LH Manual Release - Manual Indicator
9502720	LH Air Release - TouchLoc
11202720	Manual Release - RH

*Not sold individually - must be purchased in kit.

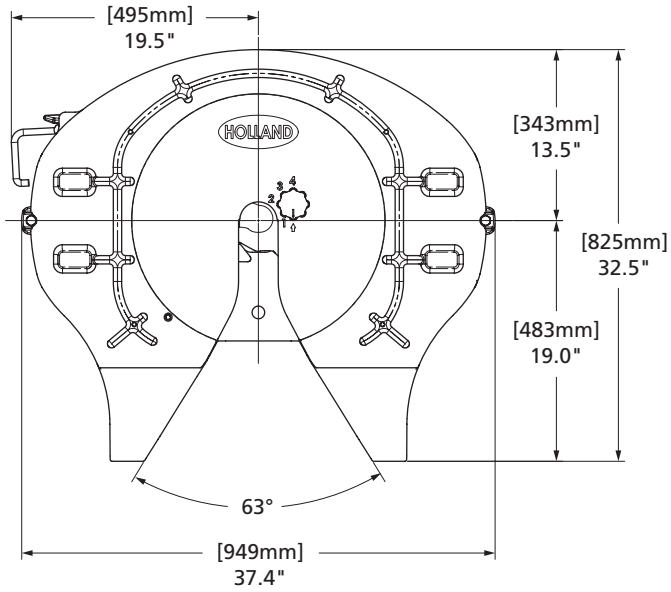

 Amendments and errors reserved. © SAF-HOLLAND, Inc.

4000504
Bracket Connection, .38" Pads

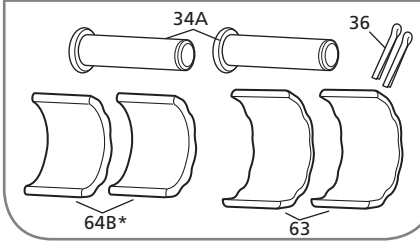

4000528
Bracket, .38" Pads - STD

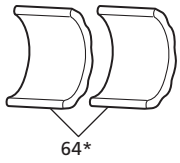

4000645
Jaw Kit

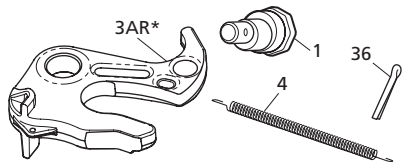

4000531
Release Handle, Left-Hand, Auto Indicator

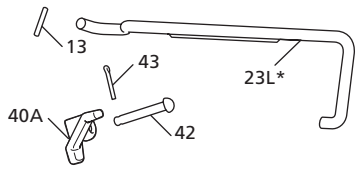

4000644
Lock, Standard, Left Hand

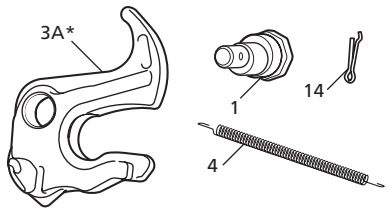

4000647
Lock, Standard

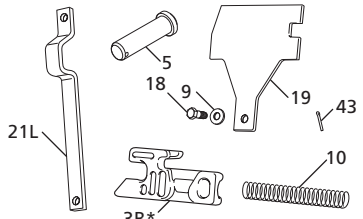

4000511
Operating Rod Kit (4100350, SRH)

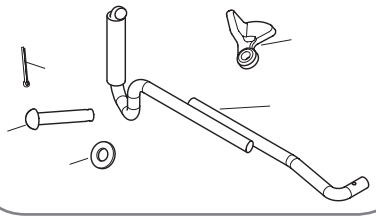

4100269
Kit Air CYL Simplex II

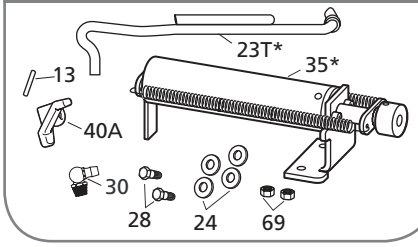

ITEM	DESCRIPTION	PART NUMBER	QTY.	WEIGHT LBS [KG]
1	Eccentric Jaw Pin	4109922-P	1	1.93 [0.88]
3A*	Lock Jaw, Left-Hand	XA-4109939	1	8.48 [3.85]
3B*	Lock, Left Hand	4109931	1	6.58 [2.98]
3AR*	Lock Jaw, Right-Hand See RK-various kit called out	4109940	1	8.25 [3.74]
4	Spring, Jaw Return	1200101	1	0.10 [0.05]
5	Pin, Clevis, .63" Diameter X 2.25" Long	5400707	1	0.22 [0.10]
9	Washer, .66" I.D. x 1.31" O.D.	XB-T-199	1	0.03 [0.01]
10	Spring, Lock	1200706	1	0.63 [0.29]
13	Pin, Spring, .19" Dia. x 1.15" Long	9900181	1	0.01 [0.005]
14	Pin, Cotter, .19" Dia. x 1.25" Long	9900170	1	0.01 [0.005]
18	HHSB, .50"-13 x 1.88" Gr 5	XB-11127	1	0.16 [0.07]
19	Plate, Cover	XA-10969	1	4.03 [1.83]
21L	Lever Bar, Left-Hand	4100373	1	2.69 [1.22]
23L*	Release Handle, Left-Hand with Automatic Indicator	4100420	1	1.46 [0.66]
23R*	Release Handle, Right-Hand with Automatic Indicator, See 4000512	4100350	1	1.42 [0.64]

ITEM	DESCRIPTION	PART NUMBER	QTY.	WEIGHT LBS [KG]
23T*	Release Handle, Left-Hand with TouchLoc	4100296	1	1.36 [0.62]
24	Washer, .41" I.D. x .81" O.D., Hardened	9900174	4	0.01 [0.005]
27	Washer, .56" I.D. x 1.38" O.D., Manual Release	XB-T-49	1	0.04 [0.02]
28	HHCS, .38"-16 x 1.50" Gr 8	85617	2	0.06 [0.03]
30	Fittings, Grease 90°	9900179	1	0.01 [0.005]
34A	Pin, Bracket	5400705	2	3.25 [1.47]
35*	Cylinder Assembly, Air	4100284	1	11.00 [4.99]
36	Pin, Cotter, .38" Diameter x 1.50" Long	9900169	2	0.08 [0.04]
40A	Lock Indicator, Left-Hand Automatic	4100294	1	0.55 [0.25]
40AR	Lock Indicator, Right-Hand Automatic	4100428	1	
40M	Lock Indicator, Left-Hand Manual	4101250	1	0.66 [0.30]
42	Pin, Indicator	5400711	1	0.18 [0.08]
43	Pin, Cotter, .13" Diameter x 1.25" Long	84261	1	0.01 [0.005]
63	Shoe, Bracket	4100328	2	0.69 [0.31]
64*	Insert, .38" Bracket	4100329	2	0.51 [0.23]
69	Lock Nut, .38"-16 Gr C	9900139	2	0.01 [0.005]

*Not sold individually - must be purchased in kit.

XL-FW10081PM-en-US Rev D 2016-03-01 Amendments and errors reserved. © SAF-HOLLAND, Inc.

THIS PAGE INTENTIONALLY LEFT BLANK

 Amendments and errors reserved. © SAF-HOLLAND, Inc.

SAF-HOLLAND Group



SIMPLEX II MODEL REPLACED BY SIMPLEX II SE

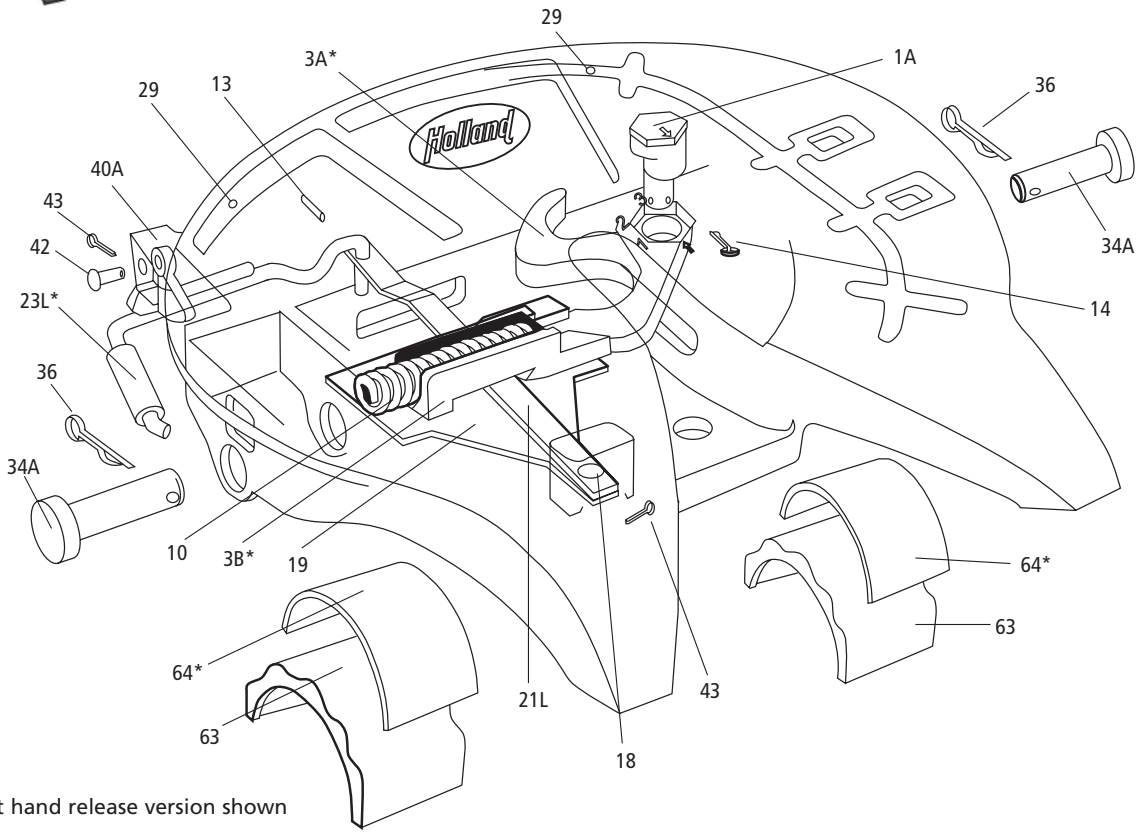

Left hand release version shown

DISCONTINUED MODEL
SERVICE PARTS ONLY
Please contact Customer Service for part availability
888.396.6501

For Models With Manual Indicator

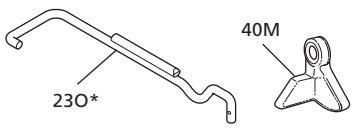

For Right Hand Models

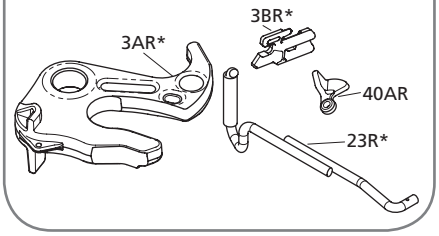

For Models With TouchLoc

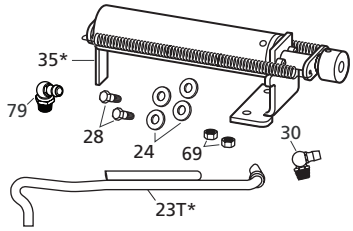

XL-FW10081PM-en-US Rev D 2016-03-01 Amendments and errors reserved. © SAF-HOLLAND, Inc.

ITEM	DESCRIPTION	PART NUMBER	QTY.	WEIGHT LBS [KG]
1A	Eccentric Jaw Pin	4109916	1	1.87 [0.85]
1B	Eccentric Jaw Pin, Oversized	4109977	1	1.90 [0.86]
3A*	Lock Jaw, LH, See 4000501, 4000502, 4000539	XA-4109939	1	8.48 [3.85]
3AR*	Lock Jaw, RH, See 4000503, 4000523	4109940**	1	8.25 [3.74]
3B*	Lock, LH, See 4000572	4109931	1	6.58 [2.98]
3BR*	Lock, RH See 4000574	4109808	1	6.59 [2.99]
10	Spring, Lock	1200706	1	0.63 [0.29]
13	Pin, Spring, .19" Diameter x 1.15" Long	9900181	1	0.01 [0.005]
14	Pin, Cotter, .19" Diameter x 1.25" Long	9900170	1	0.01 [0.005]
18	Pin, Lever Bar	5400766	1	0.25 [0.11]
19	Plate, Cover	XA-10969	1	4.12 [1.87]
21L	Lever Bar, Straight Pull	4100712	1	2.29 [1.04]
23L*	Release Handle, LH with Automatic Indicator, See 4000531	4100342	1	1.35 [0.61]
23R*	Release Handle, RH with Automatic Indicator, See 4000512	4100350	1	1.42 [0.64]
23O*	Release Handle, LH for Manual Indicator, See 4000650	4100332	1	1.31 [0.59]
23T*	Release Handle, LH w/TouchLoc, See 4000532	4100296	1	1.36 [0.62]
24	Washer, .41" I.D. x .81" O.D., Hardened	9900174	4	0.01 [0.005]
28	HHCS, .38"-16 x 1.50" Gr 8	85617	2	0.06 [0.03]
29	Fittings, Grease	84787	4	0.01 [0.005]
30	Fittings, Grease 90°	9900179	1	0.01 [0.005]
34A	Pin, Bracket	5400705	2	3.25 [1.47]
35*	Cylinder Assembly, Air, See 4100269	4100284	1	11.00 [4.99]
36	Pin, Cotter, .38" Diameter x 1.50" Long	9900169	2	0.08 [0.04]
40A	Lock Indicator, LH Automatic	4100294	1	0.55 [0.25]
40AR	Lock Indicator, RH Automatic	4100428	1	0.66 [0.30]
40M	Lock Indicator, LH Manual	4101250	1	0.66 [0.30]
42	Pin, Indicator	5400711	1	0.18 [0.08]
43	Pin, Cotter, .13" Diameter x 1.25" Long	84261	2	0.01 [0.005]
63	Shoe, Bracket	4100328	2	0.69 [0.31]
64*	Insert, .38" Bracket, See 4000528 or 4000504	4100329	2	0.51 [0.23]
69	Lock Nut, .38"-16 Gr C	9900139	2	0.01 [0.005]
79	Fittings, Grease 65° x .38" Long	85496	1	0.01 [0.005]

* Not sold individually - must be purchased in kit.

** **NOTE:** The current jaw XA-4109939/4109940, replaces the previous design jaw 4109930/4109920.

REPLACEMENT TOP PLATE PART NUMBERS	
PART NUMBER	DESCRIPTION
4102720	LH Manual Release - Auto Indicator
4102727	LH Manual Release - Manual Indicator
9502720	LH Air Release - TouchLoc
11202720	RH Manual Release

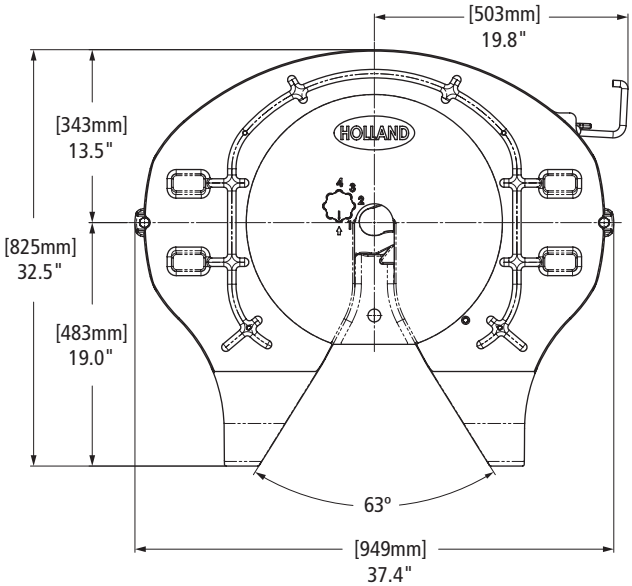

 Amendments and errors reserved. © SAF-HOLLAND, Inc.

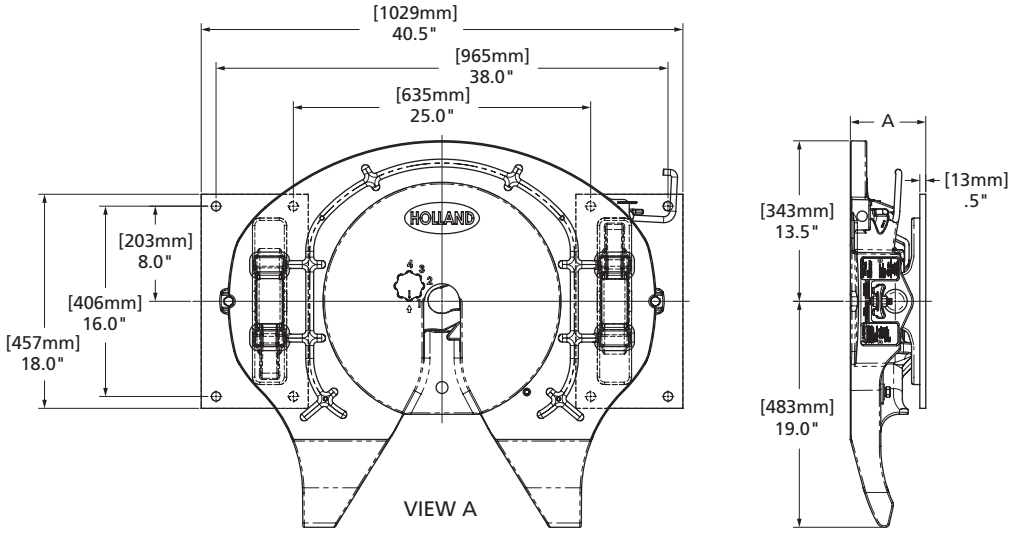

SIMPLEX II RH CAST FAB BRACKET (VIEW A)
RIGHT HAND SHOWN
LEFT HAND OPPOSITE

SIMPLEX II SE W/ CAST FAB BRACKETS			
ASSEMBLY PART NUMBER	BRACKET PART NUMBER	DIM A	ASSY WEIGHT LBS [KG]
4069215	4000105	6.44" [164]	325.00 [147.42]
4069307	4009114	7.69" [195]	332.00 [150.59]
4069276	4009297	8.69" [221]	339.00 [153.77]

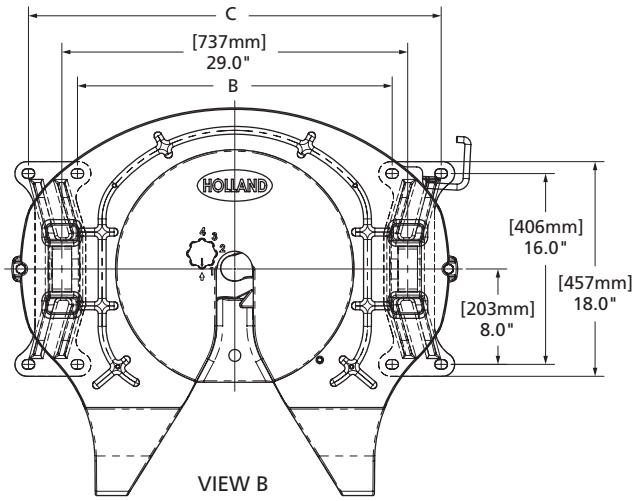

SIMPLEX II RH STANDARD BRACKET HEADS (VIEW B)
RIGHT HAND SHOWN
LEFT HAND OPPOSITE

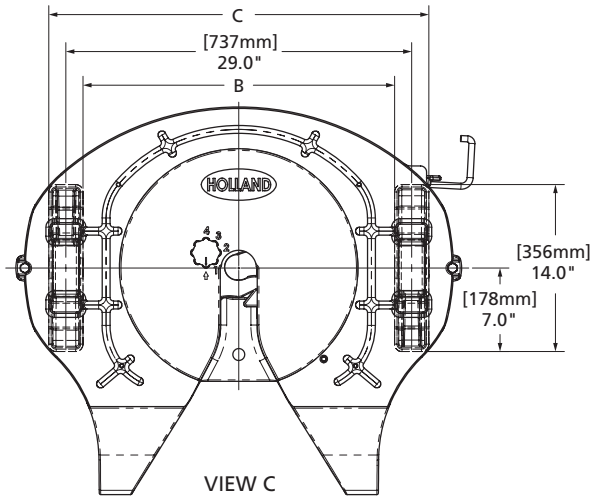

SIMPLEX II RH STANDARD BRACKET HEADS ONLY (VIEW C)
RIGHT HAND SHOWN
LEFT HAND OPPOSITE

SIMPLEX II SE W/ CAST BRACKETS				
ASSEMBLY PART NUMBER	BRACKET PART NUMBER	DIM B	DIM C	ASSY WEIGHT LBS [KG]
FLAT BASE BRACKETS (WIDE)				
4160032	4109865	25.00" [635]	36.38" [924]	307.00 [139.25]
4160033	4109011			313.00 [141.97]
4160034	4109933			319.00 [144.70]
FLAT BASE BRACKETS (WIDE)				
4160031	4109839	26.38" [267]	34.62" [879]	311.00 [141.07]

SIMPLEX II SE W/ CAST BRACKETS (HEADS ONLY)				
ASSEMBLY PART NUMBER	BRACKET PART NUMBER	DIM B	DIM C	ASSY WEIGHT LBS [KG]
4069557	4100110	26.13" [664]	31.88"[810]	280.00 [127.01]
4069074	4109976			281.00 [127.46]
4069075	4109961			288.00 [130.63]
4069076	4109960			295.00 [133.81]
4069680	4109991	25.5" [647]	32.5" [648]	297.00 [134.72]
4069078	4109982			310.00 [140.61]

XL-FW10081PM-en-US Rev D 2016-03-01 Amendments and errors reserved. © SAF-HOLLAND, Inc.

4000501
Rebuild, Jaw

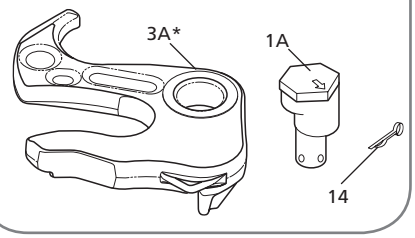

4000502
Rebuild, Jaw, Oversize

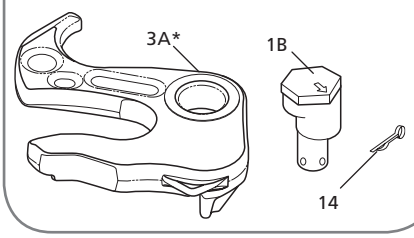

4000503
Kit, Jaw, RH, Pin Eccentric

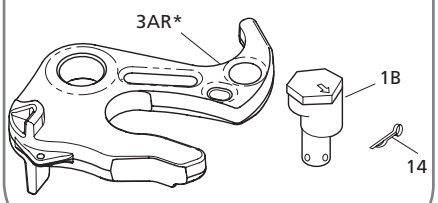

4000523
Kit, Jaw, RH, Pin Eccentric, Oversize

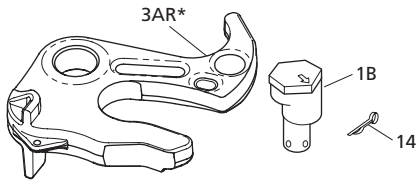

4000539
Jaw and Return Spring Retrofit

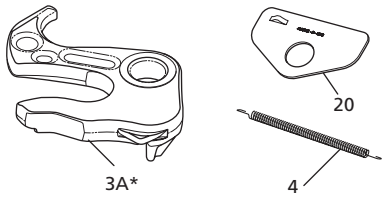

4000540
Obsolete - Retrofit Jaw Spring Kit (RH)

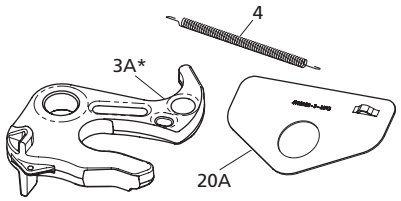

4000504
Bracket Connection, .38" Pads

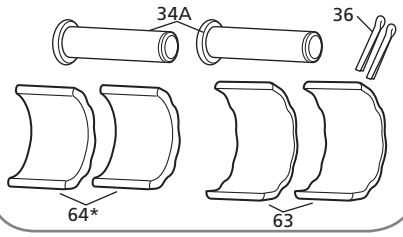

4000528
Bracket, .38" Pads - STD

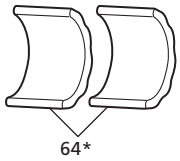

ITEM	DESCRIPTION	PART NUMBER	QTY.	WEIGHT LBS [KG]
1A	Eccentric Jaw Pin	4109916	1	1.87 [0.85]
1B	Eccentric Jaw Pin, Oversized	4109977	1	1.90 [0.86]
3A*	Lock Jaw, Left-Hand	XA-4109939	1	8.48 [3.85]
3AR*	Lock Jaw, Right-Hand	4109940	1	8.25 [3.74]
4	Spring, Jaw Return	1200101	1	0.10 [0.05]
14	Pin, Cotter, .19" Diameter x 1.25" Long	9900170	1	0.01 [0.005]

ITEM	DESCRIPTION	PART NUMBER	QTY.	WEIGHT LBS [KG]
20	Plate, Spring Retainer, Left-Hand	4100101	1	0.31 [0.14]
20A	Plate, Spring Retainer, Right Hand	4100102	1	0.32 [0.15]
34A	Pin, Bracket	5400705	2	3.25 [1.47]
36	Pin, Cotter, .38" Diameter x 1.50" Long	9900169	2	0.08 [0.04]
63	Shoe, Bracket	4100328	2	0.69 [0.31]
64*	Insert, .38" Bracket	4100329	2	0.51 [0.23]

*Not sold individually - must be purchased in kit.

 Amendments and errors reserved. © SAF-HOLLAND, Inc.

SAF-HOLLAND Group

4000509
Operating Rod Handle Kit (45° Chamfer)

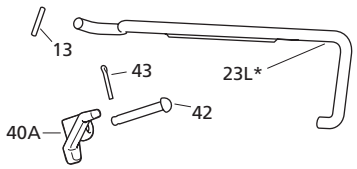

4000512
Kit, Rod, Operating, Lite, Simplex

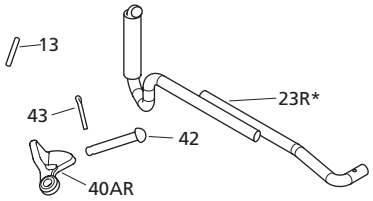

4000532
Kit Handle 4100296 S2T

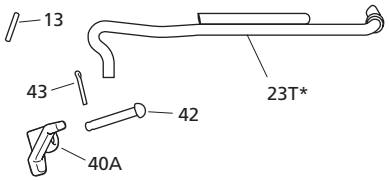

4000650
Handle Kit (4100332)

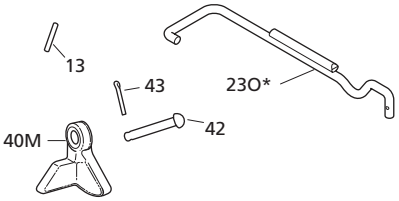

4100269
Kit Air CYL Simplex II

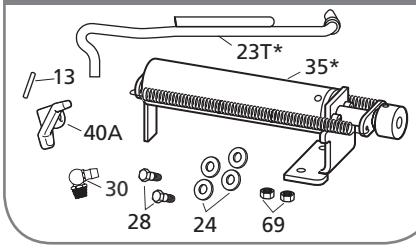

4000572
Simplex II Lock Kit (LH)

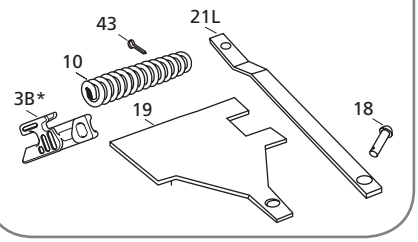

4000574
Kit, Lock, Simplex II RH

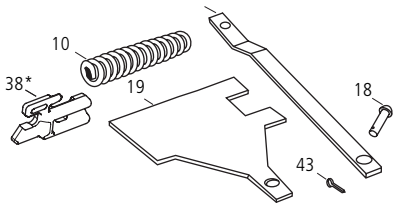

ITEM	DESCRIPTION	PART NUMBER	QTY.	WEIGHT LBS [KG]
3B*	Lock, Left Hand	4109931	1	6.58 [2.98]
3BR*	Lock, Right Hand	4109808	1	6.59 [2.99]
10	Spring, Lock	1200706	1	0.63 [0.29]
13	Pin, Spring, .19" Dia. x 1.15" Long	9900181	1	0.01 [0.005]
18	Pin, Lever Bar	5400766	1	0.25 [0.11]
19	Plate, Cover	XA-10969	1	4.03 [1.83]
21L	Lever Bar, Straight Pull	4100712	1	2.29 [1.04]
23L*	Release Handle, Left-Hand with Automatic Indicator	4100342	1	1.35 [0.61]
23R*	Release Handle, Right-Hand with Automatic Indicator	4100350	1	1.42 [0.64]
23O*	Release Handle, Left-Hand for Manual Indicator	4100332	1	1.31 [0.59]

ITEM	DESCRIPTION	PART NUMBER	QTY.	WEIGHT LBS [KG]
23T*	Release Handle, Left-Hand with TouchLoc	4100296	1	1.36 [0.62]
24	Washer, .41" I.D. x .81" O.D., Hardened	9900174	4	0.01 [0.005]
28	HHCS, .38"-16 x 1.50" Gr 8	85617	2	0.06 [0.03]
30	Fittings, Grease 90°	9900179	1	0.01 [0.005]
35*	Cylinder Assembly, Air	4100284	1	11.00 [4.99]
40A	Lock Indicator, Left-Hand Automatic	4100294	1	0.55 [0.25]
40AR	Lock Indicator, Right-Hand Automatic	4100428	1	0.66 [0.30]
40M	Lock Indicator, Left-Hand Manual	4101250	1	0.66 [0.30]
42	Pin, Indicator	5400711	1	0.18 [0.08]
43	Pin, Cotter, .13" Diameter x 1.25" Long	84261	1	0.01 [0.005]
69	Lock Nut, .38"-16 Gr C	9900139	2	0.01 [0.005]

*Not sold individually - must be purchased in kit.

XL-FW10081PM-en-US Rev D 2016-03-01 Amendments and errors reserved. © SAF-HOLLAND, Inc.

THIS PAGE INTENTIONALLY LEFT BLANK

 Amendments and errors reserved. © SAF-HOLLAND, Inc.

SAF-HOLLAND Group

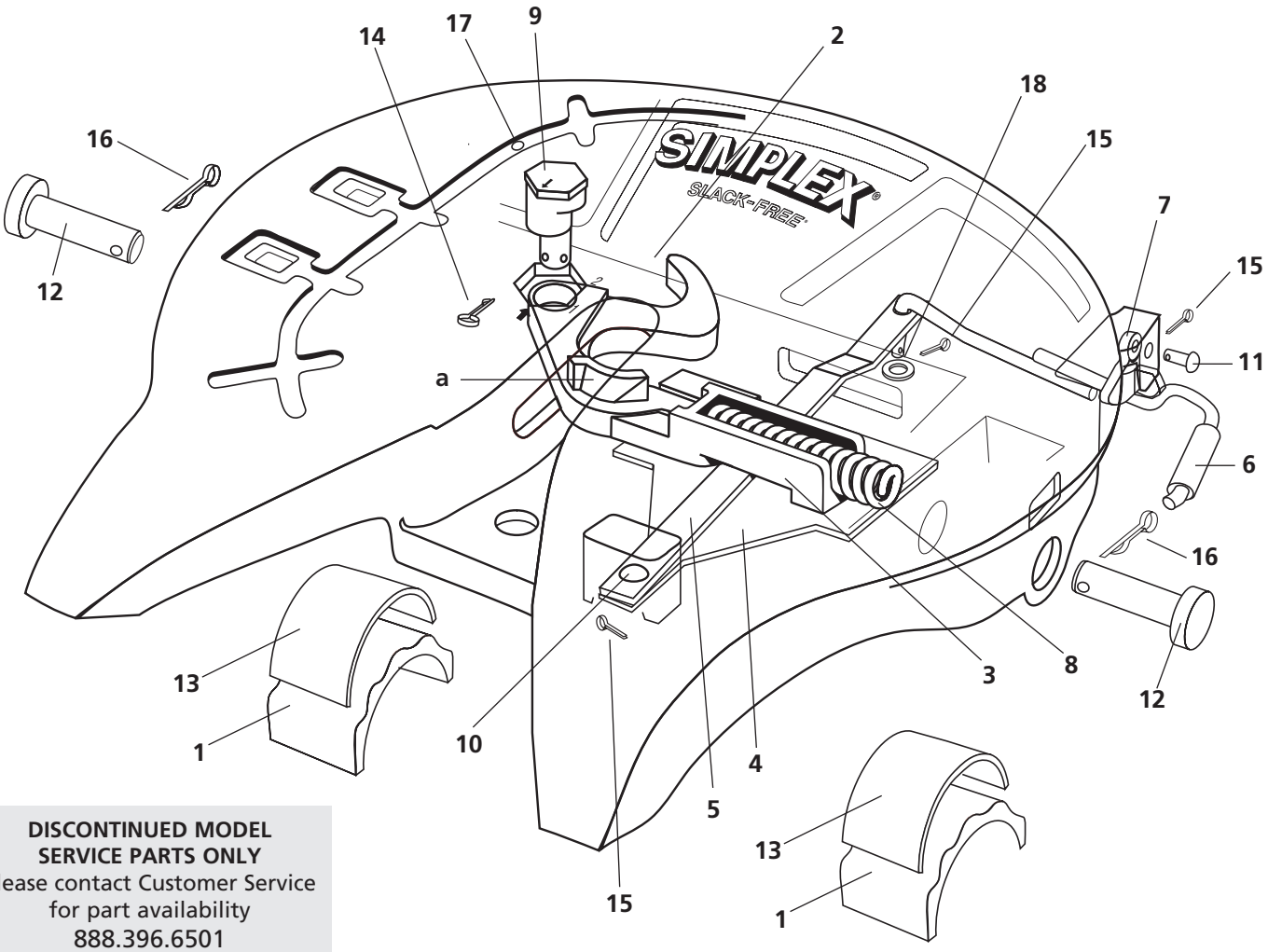

DISCONTINUED MODEL
SERVICE PARTS ONLY
Please contact Customer Service
for part availability
888.396.6501

XL-FW10081PM-en-US Rev D 2016-03-01 Amendments and errors reserved. © SAF-HOLLAND, Inc.

ITEM	DESCRIPTION	PART NUMBER	QTY.	WEIGHT LBS [KG]
1	Bracket Shoe	4109811	2	4.86 [2.20]
2	Jaw *	4109940	1	8.25 [3.74]
3	Lock	4109808	1	6.59 [2.99]
4	Cover Plate	XA-10969	1	4.12 [1.87]
5	Lever Bar	4100712	1	2.29 [1.04]
6	Operating Rod	4100350	1	1.42 [0.64]
7	Safety Indicator	4100428	1	
8	Lock Spring	1200706	1	0.63 [0.29]
9	Eccentric Pin	4109916	1	1.87 [0.85]
9A	Eccentric Pin, Oversize	4109977	1	1.90 [0.86]
10	Lever Bar Pin	5400766	1	0.25 [0.11]
11	Safety Indicator Pin	4100711	1	
12	Bracket Pin	5400705	2	3.25 [1.47]
13	Bracket Pad	4100358	2	1.01 [0.46]
14	Clinch Pin	9900170	1	0.01 [0.005]
15	Cotter Pin	84261	1	0.01 [0.005]
16	Clinch Pin	9900169	2	0.08 [0.04]
17	Grease Fitting (Not Shown)	84787	1	0.01 [0.005]
18	Washer	XB-T-49	1	0.04 [0.02]

 Amendments and errors reserved. © SAF-HOLLAND, Inc.

SAF-HOLLAND Group

4000503 Rebuild, Jaw

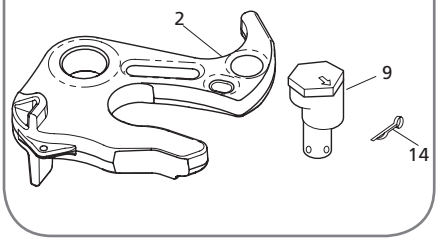

4000523 Rebuild, Jaw, Oversize

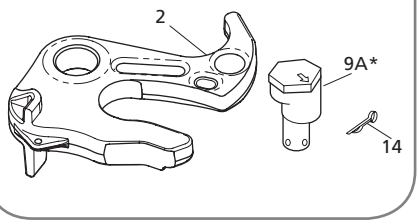

4000505 Bracket Connection Kit

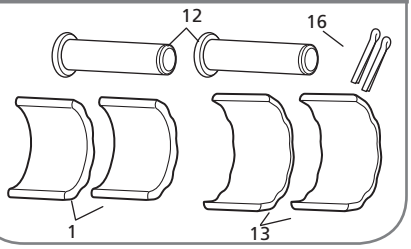

4000511 Operating Rod Kit

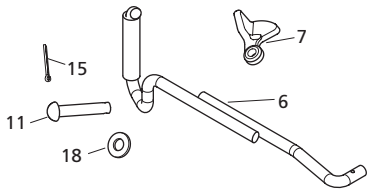

4000529 Bracket Pad Kit

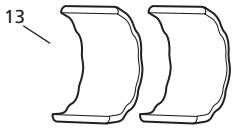

4000574 Lock Kit

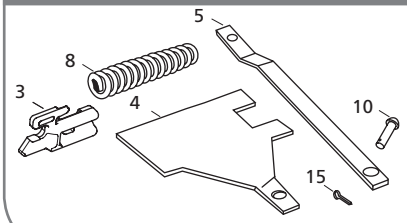

ITEM	DESCRIPTION	PART NUMBER	QTY.	WEIGHT LBS [KG]
1	Bracket Shoe	4109811	2	4.86 [2.20]
2	Jaw *	4109940	1	8.25 [3.74]
3	Lock	4109808	1	6.59 [2.99]
4	Plate, Cover	XA-10969	1	2.37 [1.08]
5	Lever Bar	4100712	1	2.29 [1.04]
6	Operating Rod	4100350	1	1.42 [0.64]
7	Safety Indicator Pin	4100428	1	0.18 [0.08]
8	Lock Spring	1200706	1	0.63 [0.29]
9	Eccentric Pin	4109916	1	1.87 [0.85]

*Not sold individually - must be purchased in kit.

ITEM	DESCRIPTION	PART NUMBER	QTY.	WEIGHT LBS [KG]
9A	Eccentric Pin, Oversize	4109977	1	1.90 [0.86]
10	Lever Bar Pin	5400766	1	0.25 [0.11]
11	Safety Indicator Pin	4100711	1	
12	Bracket Pins	5400705	2	3.25 [1.47]
13	Bracket Pad	4100358	2	1.01 [0.46]
14	Clinch Pin	9900170	1	0.01 [0.005]
15	Pin, Cotter, .13" Diameter x 1.25" Long	84261	1	0.01 [0.005]
16	Clinch Pin	9900169	2	0.08 [0.04]
18	Washer 0.50"	XB-T-69	1	

XL-FW10081PM-en-US Rev D 2016-03-01 Amendments and errors reserved. © SAF-HOLLAND, Inc.

THIS PAGE INTENTIONALLY LEFT BLANK

 Amendments and errors reserved. © SAF-HOLLAND, Inc.

Simplex II Rotary Pull Exploded View

SAF-HOLLAND Group

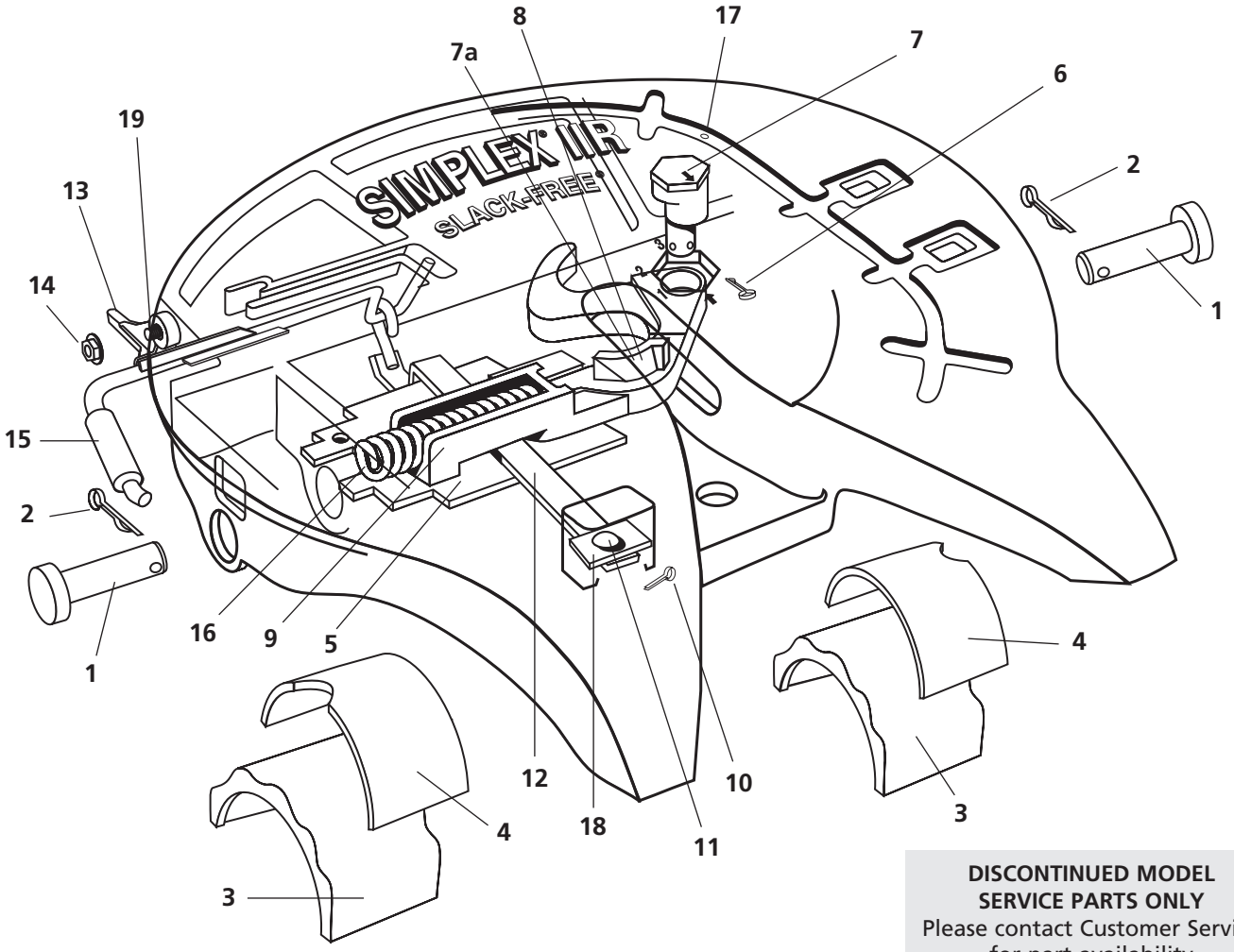

DISCONTINUED MODEL
SERVICE PARTS ONLY
Please contact Customer Service
for part availability
888.396.6501

XL-FW10081PM-en-US Rev D 2016-03-01 Amendments and errors reserved. © SAF-HOLLAND, Inc.

ITEM	DESCRIPTION	PART NUMBER	QTY	WEIGHT LBS [KG]
1	Bracket Pins	5400705	2	3.25 [1.47]
2	Clinch Pins for Bracket Pins	9900169	2	0.08 [0.04]
3	Bracket Shoes	4100328	2	0.69 [0.31]
4	Bracket Pads	4100329	2	0.51 [0.23]
5	Cover Plate	4100155	1	2.37 [1.08]
6	Clinch Pin for Jaw Pin	9900170	1	0.01 [0.005]
7	Jaw Pin (Standard)	4109916	1	1.87 [0.85]
7a	Jaw Pin (Oversize - Not Shown)	4109977	1	1.90 [0.86]
8	Jaw*	XA-4109939	1	6.70 [3.04]
9	Lock	4109931	1	6.58 [2.98]
10	Cotter Pin	84261	1	0.01 [0.005]
11	Lever Bar Pin	4000154	1	N/A
12	Lever Pin	4100152	1	2.25 [1.02]
13	Safety Indicator	4100150	1	0.40 [0.18]
14	Flange Nut	9900113	1	0.03 [0.01]
15	Operating Rod (2 Piece)	4100357	1	1.65 [0.75]
16	Lock Spring	1200706	1	0.63 [0.29]
17	Grease Fittings (2 Required)	84787	1	0.01 [0.005]
18	Lever Bar Retainer Plate	4100153	1	2.37 [1.08]
19	Weld Stud	4100180	1	0.05 [0.02]

 Amendments and errors reserved. © SAF-HOLLAND, Inc.

4000501
Rebuild, Jaw

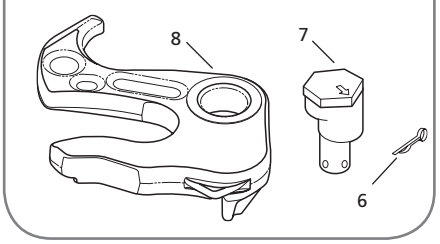

4000502
Rebuild, Jaw, Oversize

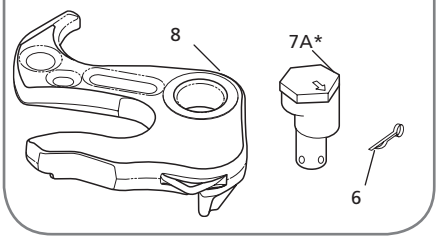

4000504
Bracket Connection Kit

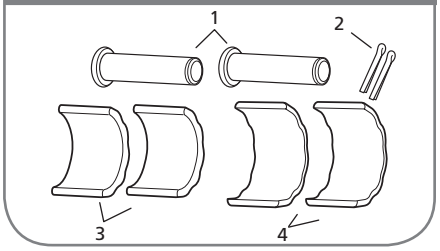

4000510
Operating Rod Kit

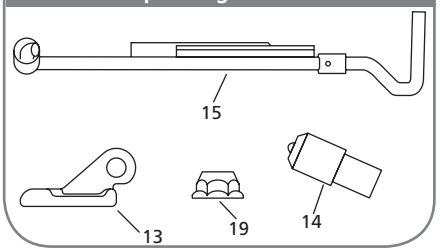

4000528
Bracket Pad Kit

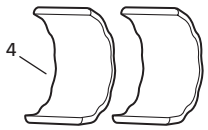

4000576
Lock Kit

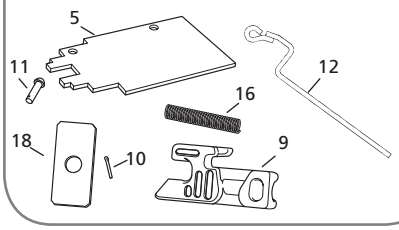

ITEM	DESCRIPTION	PART NUMBER	QTY.	WEIGHT LBS [KG]
1	Bracket Pins	5400705	2	3.25 [1.47]
2	Clinch Pins for Bracket Pins	9900169	2	0.08 [0.04]
3	Bracket Shoes	4100328	2	0.69 [0.31]
4	Bracket Pads	4100329	2	0.51 [0.23]
5	Plate, Cover	4100155	1	2.37 [1.08]
6	Pin, Cotter, .19" Diameter x 1.25" Long	9900170	1	0.01 [0.005]
7*	Eccentric Jaw Pin	4109916	1	1.87 [0.85]
7A*	Eccentric Jaw Pin, Oversized	4109977	1	1.90 [0.86]
8*	Lock Jaw, Left-Hand	XA-4109939	1	8.48 [3.85]

*Not sold individually - must be purchased in kit.

ITEM	DESCRIPTION	PART NUMBER	QTY.	WEIGHT LBS [KG]
9	Lock, Left Hand	4109931	1	6.58 [2.98]
10	Pin, Cotter, .13" Diameter x 1.25" Long	84261	1	0.01 [0.005]
11	Pin, Lever Bar	4100154	1	0.25 [0.11]
12	Rotary Operating Lever Bar	4100152	1	2.25 [1.02]
13	Safety Indicator	4100150	1	0.40 [0.18]
14	Nut, Flange	9900113	1	0.03 [0.01]
15*	Operating Rod (2 Piece)	4100357	1	1.65 [0.75]
16	Spring, Lock	1200706	1	0.63 [0.29]
18	Lever Retaining Plate	4100153	1	0.30 [0.14]
19	Weld Stud	4100180	1	0.05 [0.02]

XL-FW10081PM-en-US Rev D 2016-03-01 Amendments and errors reserved. © SAF-HOLLAND, Inc.

THIS PAGE INTENTIONALLY LEFT BLANK

 Amendments and errors reserved. © SAF-HOLLAND, Inc.

SAF-HOLLAND Group



CASTLOC ROTARY PULL MODEL REPLACED BY SIMPLEX II SE

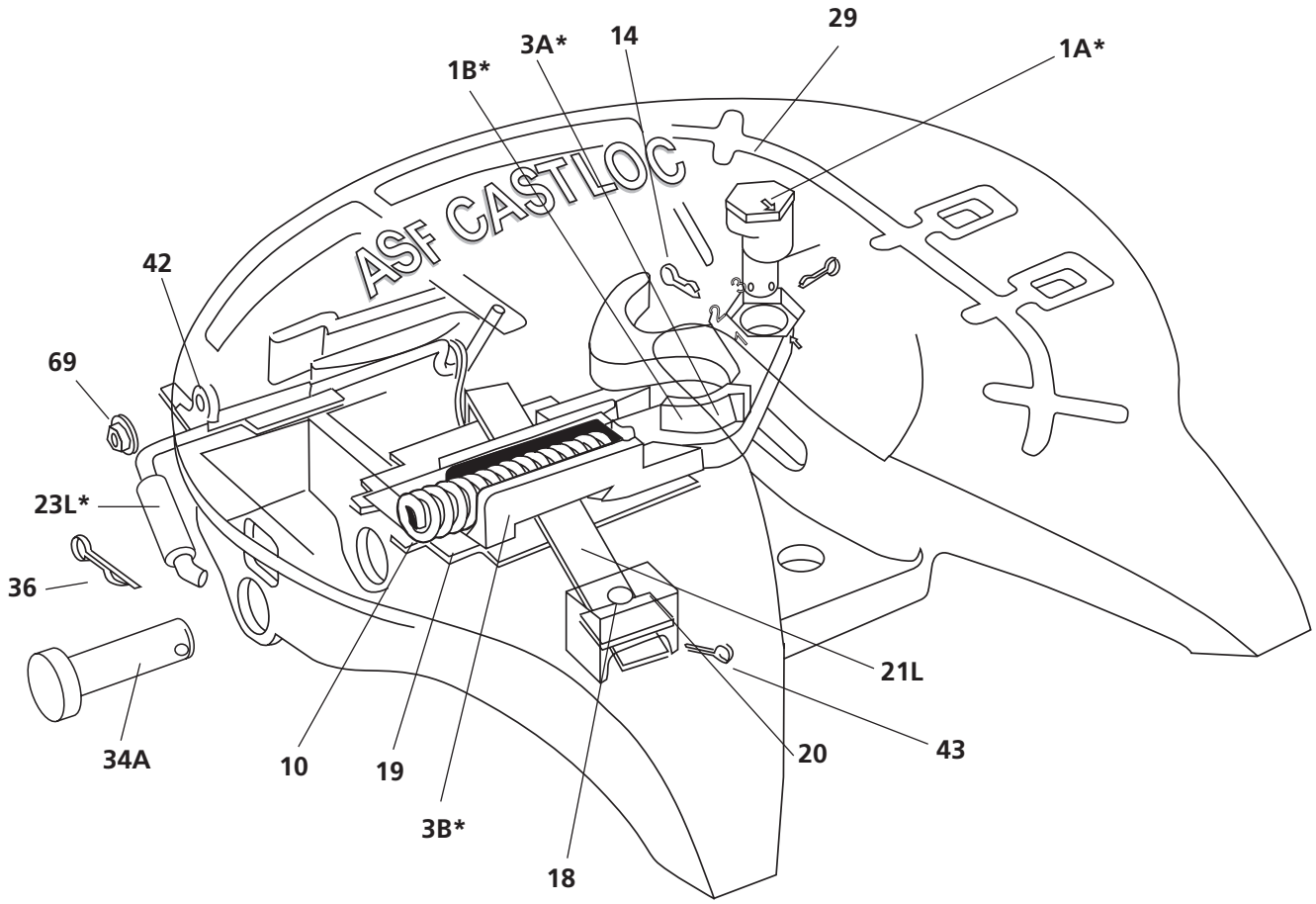

DISCONTINUED MODEL
SERVICE PARTS ONLY
Please contact Customer Service for part availability
888.396.6501

XL-FW10081PM-en-US Rev D 2016-03-01 Amendments and errors reserved. © SAF-HOLLAND, Inc.

ITEM	DESCRIPTION	PART NUMBER	QTY.	WEIGHT LBS [KG]
1A*	Eccentric Jaw Pin	4109916	1	1.87 [0.85]
1B*	Eccentric Jaw Pin, Oversized	4109977	1	1.90 [0.86]
3A*	Lock Jaw, Left-Hand See 4000501, 4000502	XA-4109939	1	8.48 [3.85]
	Lock Jaw	4109935	1	6.70 [3.04]
3B*	Lock, Left Hand	4109931	1	6.58 [2.98]
10	Spring, Lock	1200706	1	0.63 [0.29]
14	Pin, Cotter, .19" Diameter x 1.25" Long	9900170	1	0.01 [0.005]
	Pin, Cotter, .19" Diameter x 1.25" Long (Not Shown)	9900170	1	0.01 [0.005]
18	Pin, Lever Bar	4100154	1	0.25 [0.11]
19	Plate, Cover	4100155	1	2.37 [1.08]
20	Lever Retaining Plate	4100153	1	0.30 [0.14]
21L	Rotary Operating Lever Bar	4100152	1	2.25 [1.02]
23L*	Operating Rod (2 Piece)	4100357	1	1.65 [0.75]
29	Fittings, Grease	84787	2	0.01 [0.005]
34A	Bracket Pin	4100239	2	3.95 [1.79]
36	Pin, Clinch .38" x 1.75"	9900175	2	0.11 [0.05]
42	Safety Indicator	4100150	1	0.40 [0.18]
43	Pin, Cotter, .13" Diameter x 1.25" Long	84261	2	0.01 [0.005]
69	Prevailing Torque Hex Flange Nut	9900113	1	0.03 [0.01]
87**	Bracket Shim (Not Shown)	4000263	2	0.12 [0.05]
88	Weld Stud (Not Shown)	4100180	1	0.05 [0.02]

* Not sold individually - must be purchased in kit.

** **NOTE:** Bracket Shims and kits containing shims can only be used when there is sufficient wear.

REPLACEMENT TOP PLATE PART NUMBERS	
PART NUMBER	DESCRIPTION
7202700	LH Manual Release
7602700	TouchLoc Air Release

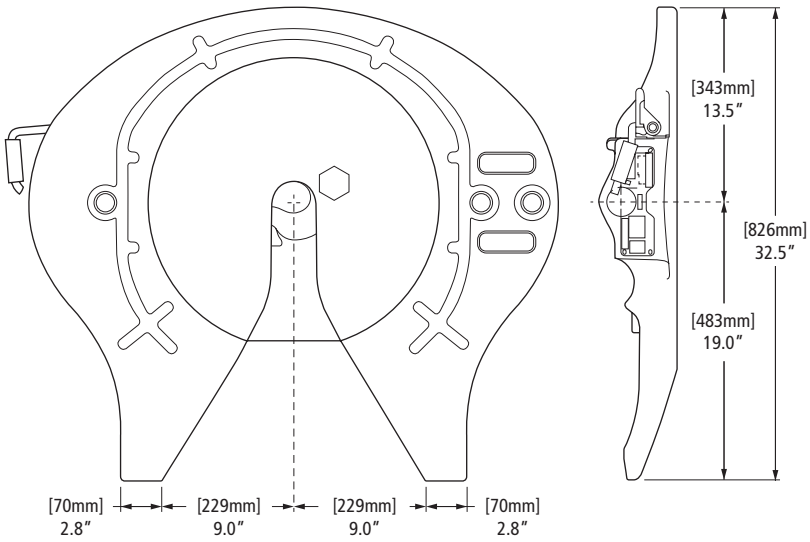

LH MANUAL RELEASE

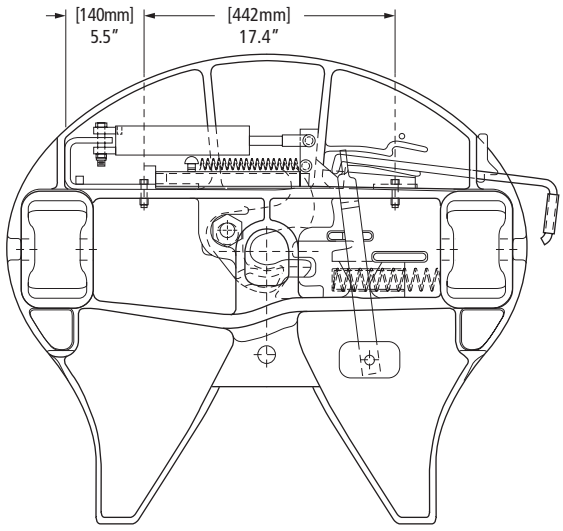

AIR RELEASE

 Amendments and errors reserved. © SAF-HOLLAND, Inc.

SAF-HOLLAND Group

4000501
Rebuild, Jaw

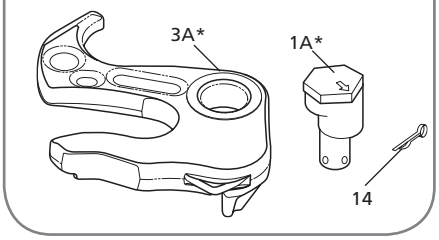

4000502
Rebuild, Jaw, Oversize

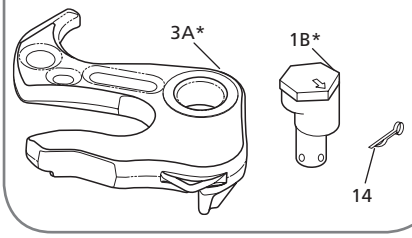

4000506
Obsolete Bracket Connection Kit

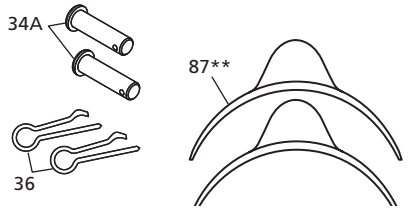

4000510
Operating Rod Kit

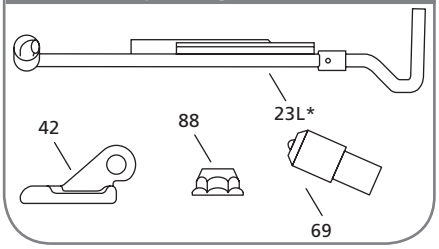

4000530
Bracket Shim Kit **

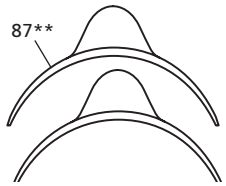

4000576
Lock Kit

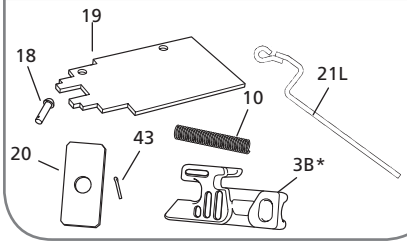

ITEM	DESCRIPTION	PART NUMBER	QTY.	WEIGHT LBS [KG]
1A*	Eccentric Jaw Pin	4109916	1	1.87 [0.85]
1B*	Eccentric Jaw Pin, Oversized	4109977	1	1.90 [0.86]
3A*	Lock Jaw, Left-Hand	XA-4109939	1	8.48 [3.85]
3B*	Lock, Left Hand	4109931	1	6.58 [2.98]
10	Spring, Lock	1200706	1	0.63 [0.29]
14	Pin, Cotter, .19" Diameter x 1.25" Long	9900170	1	0.01 [0.005]
18	Pin, Lever Bar	4100154	1	0.25 [0.11]
19	Plate, Cover	4100155	1	2.37 [1.08]
20	Lever Retaining Plate	4100153	1	0.30 [0.14]

ITEM	DESCRIPTION	PART NUMBER	QTY.	WEIGHT LBS [KG]
21L	Rotary Operating Lever Bar	4100152	1	2.25 [1.02]
23L*	Operating Rod (2 Piece)	4100357	1	1.65 [0.75]
34A	Bracket Pin	4100239	2	3.95 [1.79]
36	Pin, Clinch .38" x 1.75"	9900175	2	0.11 [0.05]
42	Safety Indicator	4100150	1	0.40 [0.18]
43	Pin, Cotter, .13" Diameter x 1.25" Long	84261	1	0.01 [0.005]
69	Prevailing Torque Hex Flange Nut	9900113	1	0.03 [0.01]
87**	Bracket Shim	4000263	2	0.12 [0.05]
88	Weld Stud	4100180	1	0.05 [0.02]

*Not sold individually - must be purchased in kit.

** **NOTE:** Bracket Shims and kits containing shims can only be used when there is sufficient wear.

XL-FW10081PM-en-US Rev D 2016-03-01 Amendments and errors reserved. © SAF-HOLLAND, Inc.

THIS PAGE INTENTIONALLY LEFT BLANK

 Amendments and errors reserved. © SAF-HOLLAND, Inc.

SAF-HOLLAND Group



CASTLOC II STRAIGHT PULL MODEL REPLACED BY SIMPLEX II SE

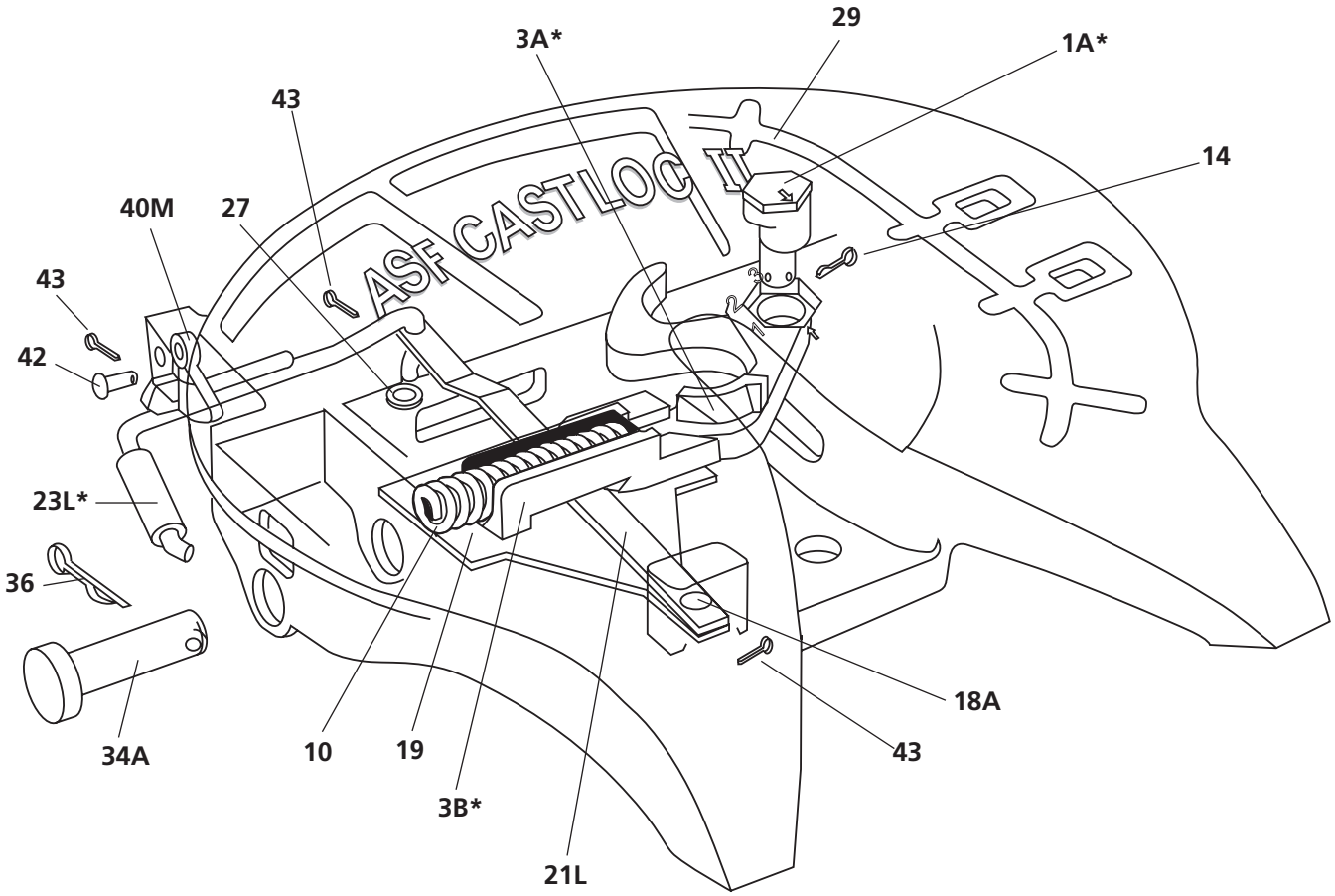

DISCONTINUED MODEL
SERVICE PARTS ONLY
Please contact Customer Service
for part availability
888.396.6501

XL-FW10081PM-en-US Rev D 2016-03-01 Amendments and errors reserved. © SAF-HOLLAND, Inc.

ITEM	DESCRIPTION	PART NUMBER	QTY.	WEIGHT LBS [KG]
1A*	Eccentric Jaw Pin	4109916	1	1.87 [0.85]
1B*	Eccentric Jaw Pin, Oversized	4109977	1	1.90 [0.86]
3A*	Lock Jaw, Left-Hand See 4000501, 4000502	XA-4109939	1	8.48 [3.85]
3B*	Lock, Left Hand	4109931	1	6.58 [2.98]
10	Spring, Lock	1200706	1	0.63 [0.29]
13	Pin, Spring, .19" Dia. x 1.15" Long	9900181	1	0.01 [0.005]
14	Pin, Cotter, .19" Dia. x 1.25" Long	9900170	1	0.01 [0.005]
18A	Pin, Lever Bar	5400766	1	0.25 [0.11]
19	Plate, Cover	4100767	1	4.12 [1.87]
21L	Lever Bar, Left-Hand	4100712	1	2.29 [1.04]
23L*	Release Handle, Left-Hand with Automatic Indicator, See 4000509	4100342***	1	1.35 [0.61]
27	Plain Washer - Wide .50"	9900846***	–	0.04 [0.02]
29	Fittings, Grease	84787	1	0.01 [0.005]
34A	Bracket Pin	4100239	2	3.95 [1.79]
36	Pin, Clinch .38" x 1.75"	9900175	2	0.11 [0.05]
40M	Lock Indicator, Left-Hand Automatic	4101250	1	0.66 [0.30]
42	Pin, Indicator	5400711	1	0.18 [0.08]
43	Pin, Cotter, .13" Diameter x 1.25" Long	84261	2	0.01 [0.005]
87***	Bracket Shim (Not Shown)	4000263	2	0.12 [0.05]

REPLACEMENT TOP PLATE PART NUMBERS	
PART NUMBER	DESCRIPTION
A7202700	LH Manual Release
A7602700	TouchLoc Air Release

* Not sold individually - must be purchased in kit.

** **NOTE:** Bracket shims and kits containing shims can only be used when there is sufficient wear.

*** **NOTE:** The operating rod 4100342 has been redesigned and uses a slotted spring pin 9900181 instead of cotter pin 84261 (Item 43) and washer 9900846 (Item 27).

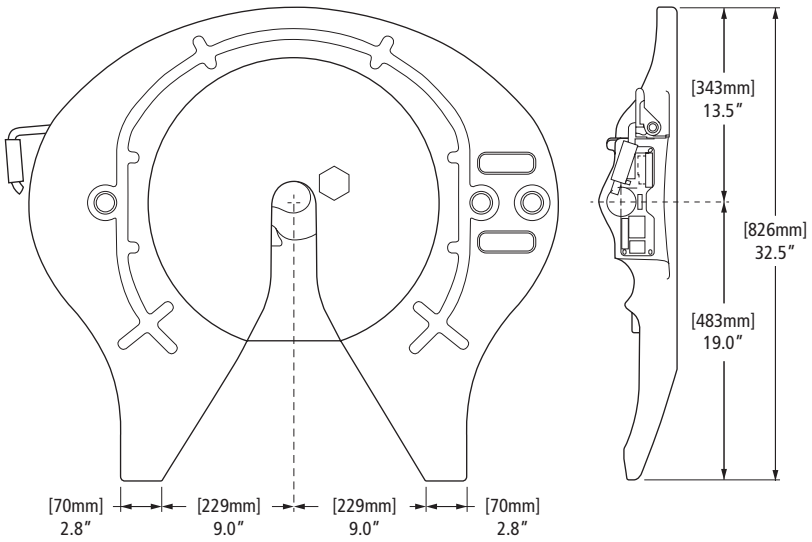

LH MANUAL RELEASE

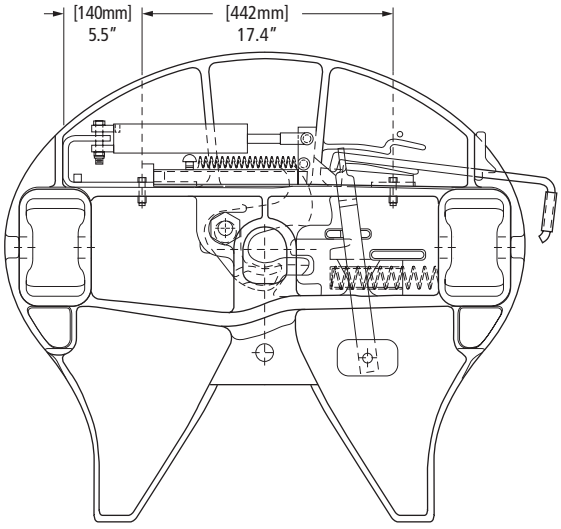

AIR RELEASE

 Amendments and errors reserved. © SAF-HOLLAND, Inc.

4000501
Rebuild, Jaw

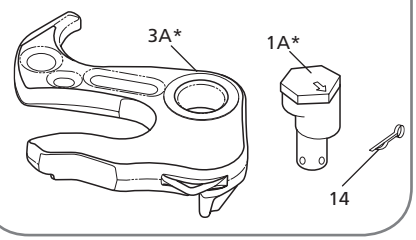

4000502
Rebuild, Jaw, Oversize

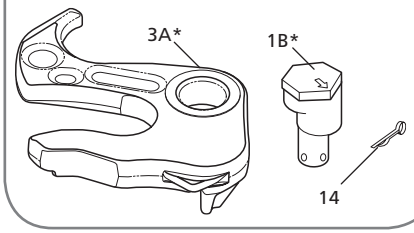

4000506
Obsolete Bracket Connection Kit

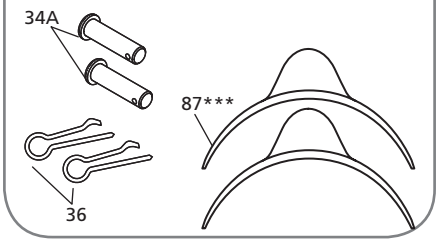

4000509
Operating Rod Kit

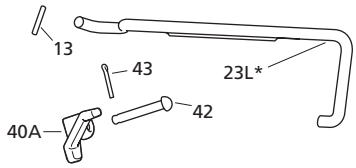

4000530**
Bracket Shim Kit

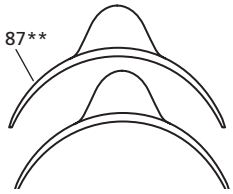

4000572
Lock Kit

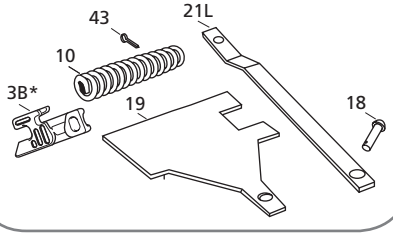

ITEM	DESCRIPTION	PART NUMBER	QTY.	WEIGHT LBS [KG]
1A*	Eccentric Jaw Pin	4109916	1	1.87 [0.85]
1B*	Eccentric Jaw Pin, Oversized	4109977	1	1.90 [0.86]
3A*	Lock Jaw, Left-Hand	XA-4109939	1	8.48 [3.85]
3B*	Lock, Left Hand	4109931	1	6.58 [2.98]
10	Spring, Lock	1200706	1	0.63 [0.29]
13	Pin, Spring, .19" Dia. x 1.15" Long	9900181	1	0.01 [0.005]
14	Pin, Cotter, .19" Dia. x 1.25" Long	9900170	1	0.01 [0.005]
18A	Pin, Lever Bar	5400766	1	0.25 [0.11]
19	Plate, Cover	XA-10969	1	4.03 [1.83]

ITEM	DESCRIPTION	PART NUMBER	QTY.	WEIGHT LBS [KG]
21L	Lever Bar, Left-Hand	4100712	1	2.29 [1.04]
23L*	Release Handle, Left-Hand	4100342	1	1.35 [0.61]
34A	Bracket Pin	4100239	2	3.95 [1.79]
36	Pin, Clinch .38" x 1.75"	9900175	2	0.11 [0.05]
40A	Lock Indicator, Left-Hand Manual	4100294	1	0.55 [0.25]
42	Pin, Indicator	5400711	1	0.18 [0.08]
43	Pin, Cotter, .13" Diameter x 1.25" Long	84261	1	0.01 [0.005]
87**	Bracket Shim	4000263	2	0.12 [0.05]

*Not sold individually - must be purchased in kit.

** **NOTE:** Bracket shims and kits containing shims can only be used when there is sufficient wear.

XL-FW10081PM-en-US Rev D 2016-03-01 Amendments and errors reserved. © SAF-HOLLAND, Inc.

THIS PAGE INTENTIONALLY LEFT BLANK

 Amendments and errors reserved. © SAF-HOLLAND, Inc.

Simplex 400C Exploded View

SAF-HOLLAND Group



SIMPLEX 400C MODEL
REPLACED BY
SIMPLEX II SE

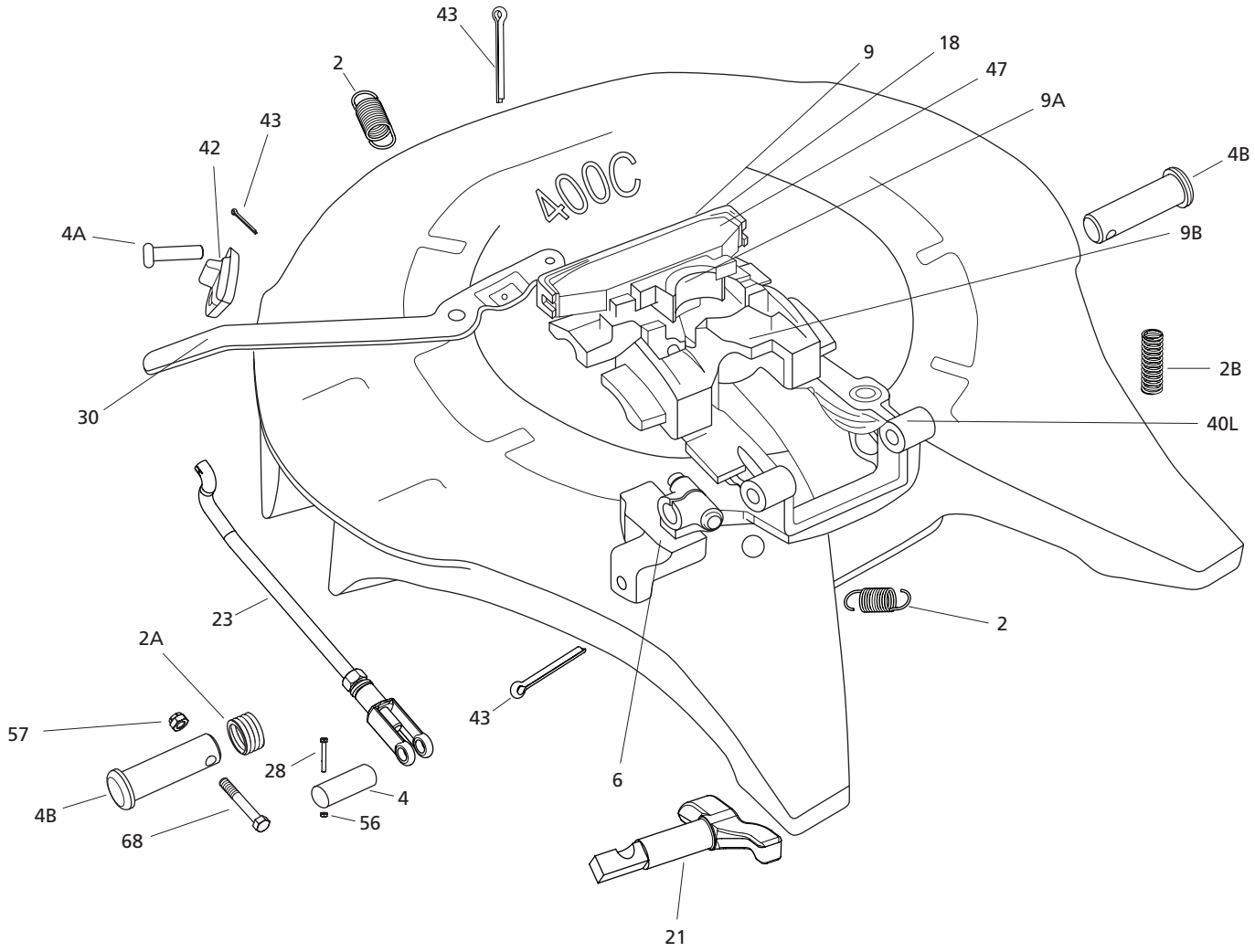

DISCONTINUED MODEL
SERVICE PARTS ONLY
Please contact Customer Service
for part availability
888.396.6501

XL-FW10081PM-en-US Rev D 2016-03-01 Amendments and errors reserved. © SAF-HOLLAND, Inc.

ITEM	DESCRIPTION	PART NUMBER	QTY.	WEIGHT LBS [KG]
2	Spring	1200091	2	0.07 [0.03]
2A	Spring, Bracket Pin	1200616	2	0.35 [0.16]
2B	Spring, Lock	1200633	1	0.09 [0.04]
4	Pin Lock ASF	5400211	2	0.63 [0.29]
4A	Pin .50 x 2.00	5400523	2	0.15 [0.07]
4B	Pin ASF	5400242	2	2.75 [1.25]
6	Lever, Operating, LH, 400 Series 5th Wheel	4109945	1	3.70 [1.68]
9	Jaw Front 400 2 PC Kingpin Block	4109793	1	2.69 [1.22]
9A	Jaw, Front, 2 Piece 400 Series 5th Wheel	4109792	1	7.30 [3.31]
9B	OBSOLETE-Jaw, Rear 400 Series 5th Wheel	4100409	1	11.50 [5.22]
18	Plate Backing ASF	4100200	1	0.31 [0.14]
21	OBSOLETE-Cam Unlocking 400 Series 5th	4101394	1	0.71 [0.32]
23	OBSOLETE-Operating Rod Assy	4100553	1	1.08 [0.49]
28	OBSOLETE-HHCS, 5/16"-24 X 2.50" LG	9900095	2	0.07 [0.03]
29	Fittings, Grease (not shown)	84787	5	0.01 [0.005]
30	OBSOLETE-Handle 400	4109944	1	3.00 [1.36]
40L	Lock LH ASF 400C	4109934	1	8.30 [3.76]
42	Safety Latch for 400 Series 5th Wheels	4109948	1	0.60 [0.27]
43	Pin, Cotter, .13" Diameter x 1.25" Long	84261	3	0.01 [0.005]
47	OBSOLETE-Buffing Block SIMPLEX 400	4100689	1	8.54 [3.87]
56	OBSOLETE-Nut, Hex Jam, 5/16"-24	9900096	2	0.01 [0.005]
57	Nut Self Locking H-D Full NC .50"-13	9900101	2	0.04 [0.02]
68	Bolt Hex 1/2"-13X 3-1/2"	9900100	2	0.22 [0.10]

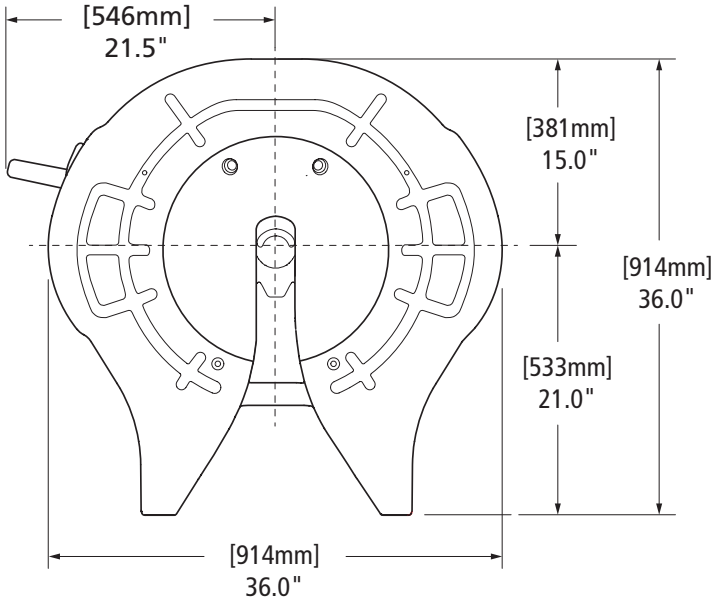

 Amendments and errors reserved. © SAF-HOLLAND, Inc.

4000184
2 Piece Jaw Conversion Kit - 400 Series

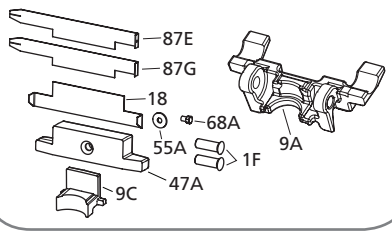

4000192
Major Repair Kit - LH 400-C

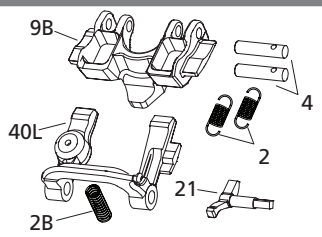

4000194
Major Repair Kit - LH 400-C

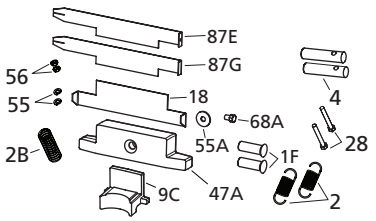

4000195
Bracket Repair Kit - LH OR RH 400-C

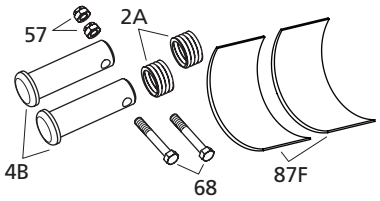

4000571
Kit For Rock & Block, Lock Bar & Safety Pin

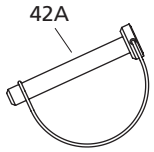

4000630
Kit Steel Bracket Shim

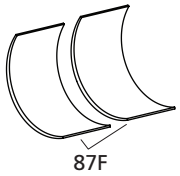

4000632
Kit Handle (Operating Rod) For 400

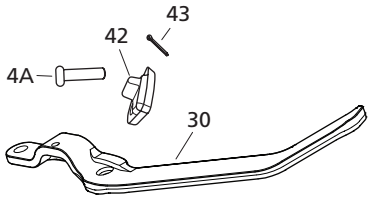

ITEM	DESCRIPTION	PART NUMBER	QTY.	WEIGHT LBS [KG]
1F	Pin Jaw ASF	4100207	2	0.31 [0.14]
2	Spring	1200091	2	0.07 [0.03]
2A	Spring, Bracket Pin	1200616	2	0.35 [0.16]
2B	Spring, Lock	1200633	1	0.09 [0.04]
3	Conversion Kit LH 400-C 2-Pc Jaw (Kit 4000192, not shown)	4000184	1	13.80 [6.26]
4	Pin Lock ASF	5400211	2	0.63 [0.29]
4A	Pin, .50" x 2.00" Long	5400523	1	0.15 [0.07]
4B	Pin ASF	5400242	2	2.75 [1.25]
4C	OBSOLETE-Lock Pin Bolt (Kit 4000192, not shown)	2100218	2	0.08 [0.04]
9A	Jaw, Front, 2 Piece 400 Series 5TH Wheel	4109792	1	7.30 [3.31]
9B	OBSOLETE-Jaw, Rear 400 Series 5TH Wheel	4100409	1	11.50 [5.22]
9C	Jaw Front Bearing Block, 400 Series	4109795	1	2.50 [1.13]
18	Plate Backing ASF	4100200	1	0.31 [0.14]
21	OBSOLETE-Cam Unlocking 400 SERIES 5TH	4101394	1	0.71 [0.32]
28	OBSOLETE-HHCS, 5/16"-24 X 2.50" LG	9900095	2	0.07 [0.03]
30	OBSOLETE-Handle 400	4109944	1	3.00 [1.36]

ITEM	DESCRIPTION	PART NUMBER	QTY.	WEIGHT LBS [KG]
40L	Lock LH ASF 400C	4109934	1	8.30 [3.76]
42	Safety Latch for 400 Series 5TH Wheels	4109948	1	0.60 [0.27]
42A	Safety Pin - Rounded Retainer Snap Pin for Lock Bar Rock & Block System	4101013	1	0.14 [0.06]
43	Pin, Cotter, .13" Diameter x 1.25" Long	84261	1	0.01 [0.005]
47A	Buffing Block, Urethane	4100693	1	1.40 [0.64]
55	OBSOLETE-Washer, Helical Spring Lock 5/16"	84624	2	0.01 [0.005]
55A	OBSOLETE-Washer .41" I.D x 1.25" O.D.	9900847	1	0.03 [0.01]
56	OBSOLETE-Nut, Hex Jam, 5/16"-24	9900096	2	0.01 [0.005]
57	Nut Self Locking H-D Full NC 1/2" - 13	9900101	2	0.04 [0.02]
63	Bolt Nut 7/16" x 2-1/4" Assembly (Kit 4000192, not shown)	2100664	2	0.15 [0.07]
68	Bolt Hex 1/2"-13 X 3-1/2"	9900100	2	0.22 [0.10]
68A	Bolt, 3/8"-16 X 1/2"	9900097	1	0.01 [0.005]
87E	Shim, .060", CONMET 400C 5TH Wheel	4101409	1	0.29 [0.13]
87F	Shim Steel 400C & CASTLOC Brackets	4100655	2	0.68 [0.31]
87G	Shim, .030", CONMET 400E 5TH Wheel	4101408	1	0.16 [0.07]
92	OBSOLETE-Lock Bar (Kit 4000571, not shown)	4101010	1	14.10 [6.40]

XL-FW10081PM-en-US Rev D 2016-03-01 Amendments and errors reserved. © SAF-HOLLAND, Inc.

THIS PAGE INTENTIONALLY LEFT BLANK

 Amendments and errors reserved. © SAF-HOLLAND, Inc.

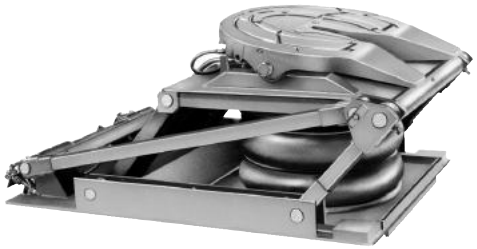

FW69 MODEL REPLACED BY FW67

NOTE: Threaded inserts welded onto inside of pocket ear.

Prior to 9/98 - Bracket Components (Not Included in Rebuild Kit)

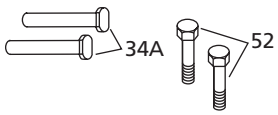

XL-FW10081PM-en-US Rev D 2016-03-01 Amendments and errors reserved. © SAF-HOLLAND, Inc.

ITEM	DESCRIPTION	PART NUMBER	QTY.	WEIGHT LBS [KG]
1	Yoke	XA-07295	1	5.82 [2.64]
2	Retaining Ring, 1" Diameter	XB-07398	2	0.01 [0.005]
3A*	Lock Set, See RK-351-08332-1	XA-08332-1	1	7.69 [3.49]
4	Spring, Extension	XB-07628	1	0.08 [0.04]
9	Shaft, Yoke	XA-1706-1	1	0.83 [0.38]
10	Spring, Compression	XB-1505	1	0.61 [0.28]
11A*	Pin, Lock, See RK-07292-1	XA-07292-1	2	1.08 [0.49]
12	Spring, Torsion	XB-2149	1	0.06 [0.03]
13	Pin, Spring, .50" Diameter x 2.75" Long	XB-21-S-500-2750	1	0.02 [0.01]
15	HHCS, .50"-20 x 1.75" Gr 5 Zinc Plate, Nylock	XB-2083	1	0.13 [0.06]
16	Washer, .56" I.D. x 1.75" O.D.	XB-08559	3	0.06 [0.03]
17	Roller, .52" I.D. x 1" O.D. x .38" Long	XA-1029	1	0.06 [0.03]
18	Roller, .66" I.D. x 1" O.D. x .38" Long	XA-1507-1	1	0.05 [0.02]
19	Washer, .66" I.D. x 2.63" O.D.	XB-07431	1	
21A	Plate, Cam	XA-08988	1	2.26 [1.03]
22	Lock Nut, .50"-20 Gr C, Cam Plates, Bracket Pins, Air Release	XB-T-69-A	4	0.04 [0.02]
23L*	Release Handle, See RK-09063	XA-09041	1	1.00 [0.45]
24B	Spring, Manual Release	XB-07291	1	0.20 [0.09]
25	Washer, .53" I.D. x 1.06" O.D.	XB-PW-1732-1-116	2	0.02 [0.01]
27	Spacer, Cam	XA-09040	1	0.54 [0.24]
29	Fittings, Grease	XB-H-38	2	0.01 [0.005]
30	Handle, Secondary Lock Release	XA-3546	1	0.32 [0.15]
31	Bar, Lock	XA-3528	1	0.61 [0.28]
34A*	Pin, Bracket	XE-06356-P	2	1.98 [0.90]
35	Nut, Hex 1.13"-7 Gr. 5	XB-NR-118-C	2	0.38 [0.17]
35A	Cylinder Assembly, Air, Aluminum	XA-11702	1	3.98 [1.81]
35B	Cylinder Assembly, Air	XA-2524-R-13-1		4.38 [1.99]
47	HHCS, 1.13"-7 x 7" Long Gr. 5	XB-BR-118-C-7	2	2.41 [1.09]
48	Elbow, 45° Street	XB-698	1	0.06 [0.03]
55	Washer, Lock 1.13" I.D. x 1.84" O.D.	XB-E-536	2	0.12 [0.05]
89	HHCS .63"-18 X 2.00"	XB-010035	1	0.24 [0.11]
90	Nut, .38"-16 Flg Lock GR.F Zinc Pl.	XB-08987	2	0.02 [0.01]
91	SHSB .38"-16 x 1.63"	XB-08974	2	N/A

*Not sold individually - must be purchased in kit.

REPLACEMENT TOP PLATE PART NUMBERS	
PART NUMBER	DESCRIPTION
XA-351-UB-P	Air Release w/Secondary Lock

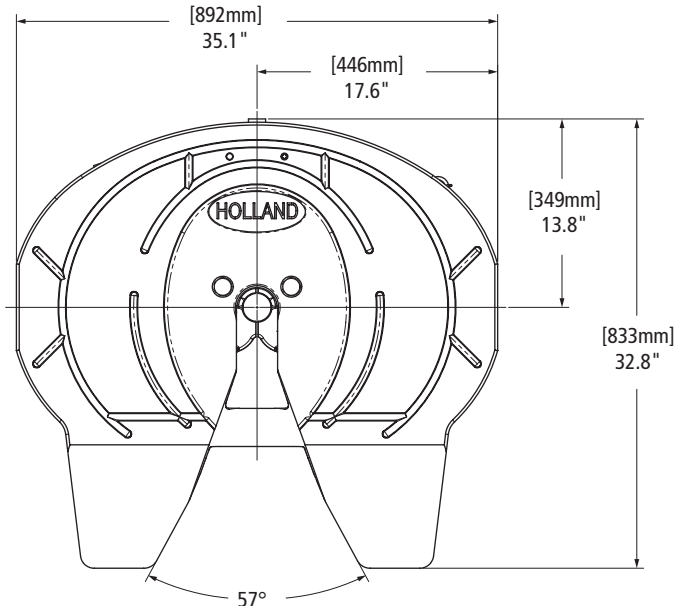

 Amendments and errors reserved. © SAF-HOLLAND, Inc.

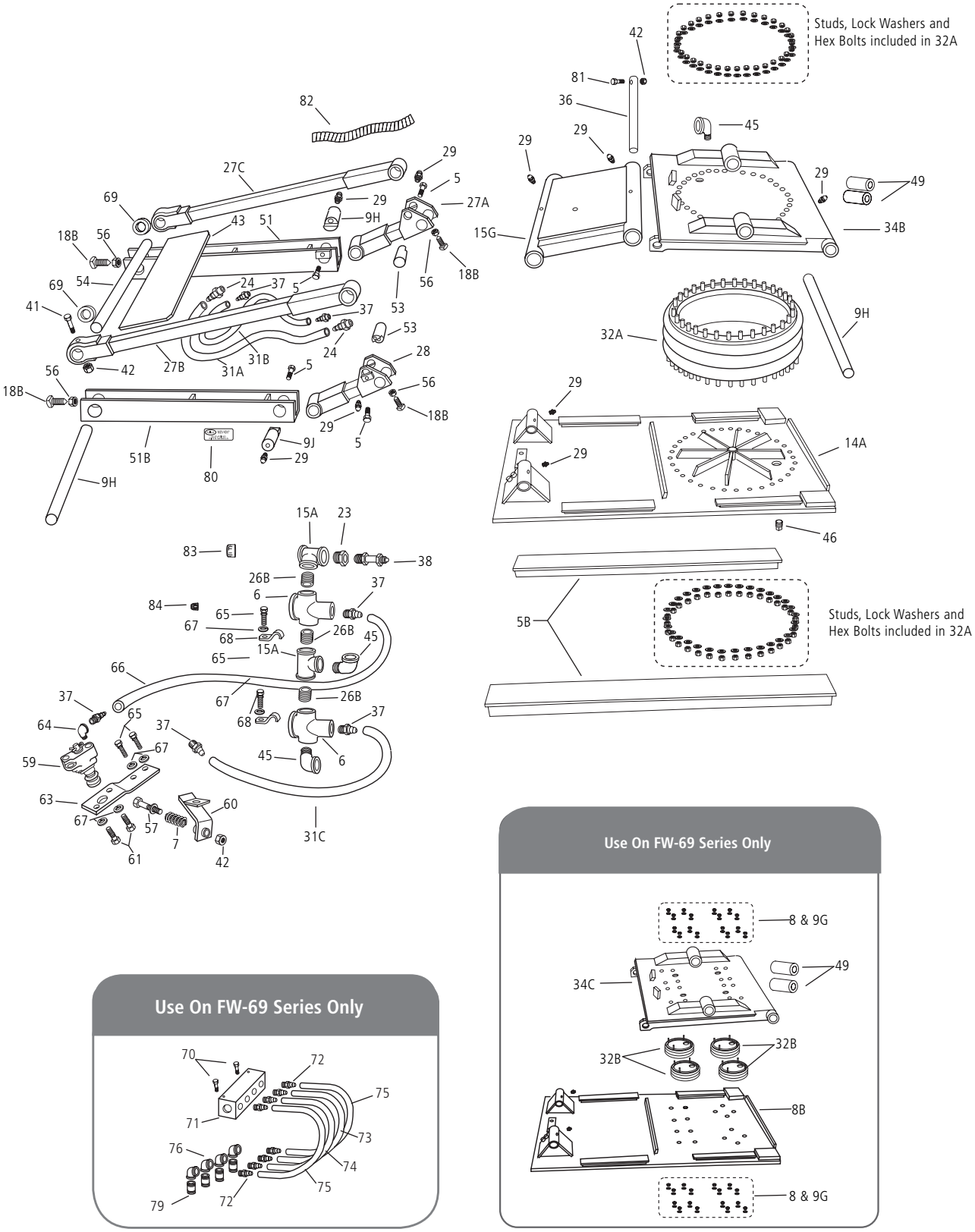

XL-FW10081PM-en-US Rev D 2016-03-01 Amendments and errors reserved. © SAF-HOLLAND, Inc.

ITEM	DESCRIPTION	PART NUMBER	QTY.	WEIGHT LBS [KG]
5	HHCS 1/2"-20 x 3/4"(Nylock)	XB-6834	4	0.08 [0.04]
5B	Mtg. Angle Sub-Assy.	XA-6755	2	88.00 [39.92]
6	Starter Valves	XB-4574	2	0.78 [0.35]
7	Compression Spring	XB-403	1	0.07 [0.03]
8	1/2"-13 Jam Nut	XB-C-59	32	0.03 [0.01]
8B	Base Sub-Assy. (FW69)	XA-6930-1	1	461.00 [209.11]
9G	1/2" Lock Washer	XB-T-45-1	32	0.02 [0.01]
9H	Shaft	XA-1311-3	2	34.30 [15.56]
9J	Shaft	XA-6798-B-3	2	3.69 [1.67]
14A	Base Sub-Assy. (FW67)	XA-6730-1	1	456.00 [206.84]
15A	3/4" Pipe Tee	XB-0144	2	0.94 [0.43]
15G	Torque Frame	XA-6718-1	1	137.00 [62.14]
18B	HHCS 5/8"-11 x 2"	XB-03553	4	0.26 [0.12]
23	1/4" Female to 3/4" Male Red. Bush.	XB-0111	1	0.17 [0.08]
24	3/4" Male Pipe Fittings	XB-6768	2	0.24 [0.11]
26B	3/4" Close Nipple	XB-0148	3	0.09 [0.04]
27A	Lower Pivot Arm Sub-Assy.	XA-6715-1-B	1	39.00 [17.69]
27B	Upper Pivot Arm	XA-6704-1-B	1	36.80 [16.69]
27C	Upper Pivot Arm	XA-6704-B	1	35.00 [15.88]
28	Lower Pivot Arm Sub-Assy.	XA-6715-2-B	1	39.00 [17.69]
29	Zerk Fittings	XB-H-38	9	0.01 [0.005]
31A	3/4" Rubber Hose 46" Long	XA-6765-1	1	0.87 [0.39]
31B	1/4" Rubber Hose 44" Long	XA-6766-1	1	0.33 [0.15]
31C	1/4" Rubber Hose 13" Long	XA-6766-13	1	0.10 [0.05]
32A	Air Bellows, Includes Bolts, Nuts and Washers (FW67)	XB-6764	1	54.00 [24.49]
32B	Air Bellows (FW69) (Requires nuts and washers)	XB-4514	4	15.00 [6.80]
34B	Lift Sub-Assy. (FW67)	XA-6742-1	1	289.00 [131.09]
34C	Lift Sub-Assy. (FW69)	XA-6942-1	1	273.00 [123.83]
36	Shaft	XA-6705-12	1	25.50 [11.57]
37	1/4" Male Pipe Fitting	XB-6769	6	0.04 [0.02]
38	Safety Valve	XB-4606	1	0.24 [0.11]
41	Hex Hd. Bolts 1/2"-13 x 4"	XB-BR-12-C-4	1	0.26 [0.12]
42	Lock Nuts 1/2"-13	XB-0103	3	0.04 [0.02]
43	Cross Plate	XA-6757	1	21.20 [9.62]

ITEM	DESCRIPTION	PART NUMBER	QTY.	WEIGHT LBS [KG]
45	3/4" Street Elbow	XB-2779-1	3	0.42 [0.19]
46	1/2" Pipe Plug (FW67 Only)	XB-6771	1	0.11 [0.05]
49	Rubber Bushings (Included with items 34B and 34C)	XB-1604-5	2	0.73 [0.33]
51	Rail Sub-Assy. (Right)	XA-6714-1-R	1	70.00 [31.75]
51B	Rail Sub-Assy. (Left)	XA-6714-1-L	1	70.00 [31.75]
53	Shaft	XA-6798-B-1	2	3.60 [1.63]
54	Shaft	XA-6705-4	1	32.80 [14.88]
56	Hex Nut 5/8"-11	XB-04067	4	0.05 [0.02]
57	Bolt Sub-Assy., Adjusting	XA-05172	1	0.28 [0.13]
59	Stop Valve	XB-4575-2	1	0.98 [0.44]
60	Bracket Sub-Assy.	XA-0195	1	1.29 [0.59]
61	HHCS 5/16"-18 x 1-1/2"	XB-C-516-C-112	2	0.04 [0.02]
63	Bracket	XA-0194	1	0.80 [0.36]
64	90° St. Elbow 1/4"Pipe Thread	XB-697	1	0.11 [0.05]
65	HHCS 5/16"-24 x 3/4"	XB-C-516-F-34	4	0.02 [0.01]
66	1/4" Rubber Hose 28" Long	XA-6766-2	1	0.21 [0.10]
67	5/16" Lock Washer	XB-116	6	0.01 [0.005]
68	Conduit Clamps	XB-01331	2	0.08 [0.04]
69	Spacer	XA-01601	2	1.12 [0.51]
70	HHCS 1/4"-28 x 2-1/2"	XB-0140	2	0.04 [0.02]
71	Air Manifold	XA-08968	1	2.08 [0.94]
72	Push Lox Ftg. 1/4" Pipe to 3/8" Hose	XB-6848	8	0.06 [0.02]
73	3/8" Hose 10" Long	XA-6847-3	1	0.10 [0.05]
74	3/8" Hose 25" Long	XA-6847-5	1	0.20 [0.09]
75	3/8" Hose 19" Long	XA-6847-4	2	0.15 [0.07]
76	90° Elbow, 1/4" Thread	XB-6752	4	0.11 [0.05]
79	1/4" Pipe Nipple 1-1/2" Long	XB-6854	4	0.04 [0.02]
80	Tag, Mov-On	XB-06300	1	N/A
81	Hex Hd. Cap Screw 1/2"-13 x 4-3/4"	XB-BHRO-12-C-434	1	0.30 [0.14]
82	Hose Guard	XB-05169	2	0.05 [0.02]
83	Plug	XB-03942	2	0.01 [0.005]
84	Plug	XB-06074	2	0.01 [0.005]

PART NUMBER	DESCRIPTION	A	MINIMUM CAB-AXLE DIM		WEIGHT LBS [KG]
		NOM. LIFT HEIGHT	96" WIDE	102" WIDE	
FW67-16B	Single Air Bag Lift	15.25" [387]	64.0" [1626]	67.0" [1702]	1986 [900.8]
FW69-12B	Four Air Bag Lift	11.62" [295]	64.0" [1626]	67.0" [1702]	2000 [907.2]

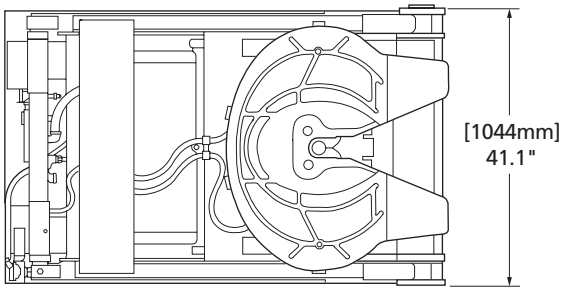

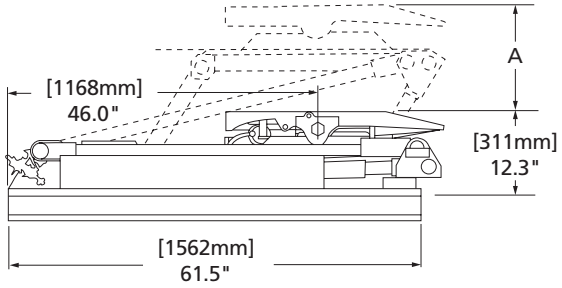

 Amendments and errors reserved. © SAF-HOLLAND, Inc.

RK-09063
Complete Rebuild (Release Components)

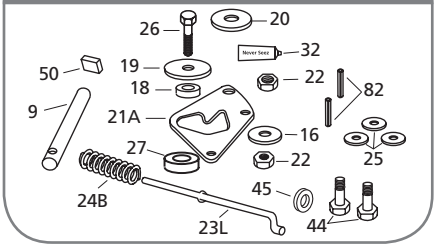

RK-351-08332-1
Kit, Lock & Pins

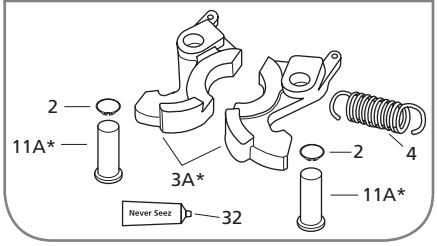

RK-07292-1
Retaining Ring Pins Kit

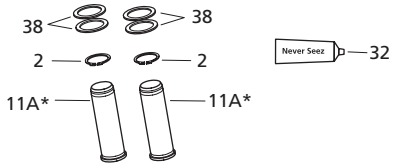

ITEM	DESCRIPTION	PART NUMBER	QTY.	WEIGHT LBS [KG]
2	Retaining Ring, 1" Diameter	XB-07398	2	0.01 [0.005]
3A*	Lock Set	XA-08332-1	1	7.65 [3.47]
4	Spring, Extension	XB-GT-13-1	1	0.07 [0.03]
9	Shaft, Yoke	XA-1706-1	1	0.83 [0.38]
11A*	Pin, Lock	XA-07292-1	2	1.08 [0.49]
16	Washer, .56" I.D. x 1.75" O.D.	XB-08559	1	0.06 [0.03]
17	Valve with Face Plate	XB-4530-5	1	1.18 [0.53]
18	Roller, .66" I.D. x 1" O.D. x .38" Long	XA-1507-1	1	0.05 [0.02]
19	Washer, .66" I.D. x 2.63" O.D.	XB-07431	1	0.24 [0.11]
20	Washer, .50" I.D. x 2.25" O.D.	XB-1030	1	0.20 [0.09]
21A	Plate, Cam	XA-08988	1	2.26 [1.03]
22	Lock Nut, .50"-20 Gr C, Cam Plates, Bracket Pins , Air Release	XB-T-69-A	2	0.04 [0.02]
23L	Release Handle	XA-09041	1	1.00 [0.45]
24B	Spring, Manual Release	XB-07291	1	0.20 [0.09]
25	Washer, .53" I.D. x 1.06" O.D.	XB-PW-1732-1-116	3	0.02 [0.01]
26	HHCS, .63"-18 x 2" Long Gr. 8	XB-10035	1	0.25 [0.11]
27	Spacer, Cam	XA-09040	1	0.54 [0.24]

ITEM	DESCRIPTION	PART NUMBER	QTY.	WEIGHT LBS [KG]
32	Never-Seez, 7.5g Tube	XB-02967	1	N/A
38	Washer, 1.19" I.D. x 1.58" O.D.	XB-05859-1	4	0.01 [0.005]
44	HHCS, .50"-20 X 1.75" Long Gr. 8	XB-T-89-5	2	0.14 [0.06]
45	Guide, Handle	XA-09039	1	0.11 [0.05]
50	Stop, Yoke	XA-09043	1	0.05 [0.02]
82	Pin, Spring, .38" Diameter x 1.75" Long	XB-21-S-375-1750	2	0.02 [0.01]

*Not sold individually - must be purchased in kit.

XL-FW10081PM-en-US Rev D 2016-03-01 Amendments and errors reserved. © SAF-HOLLAND, Inc.

RK-351-UB Stainless Steel Air Cylinder
RK-351-UB-1 Aluminum Air Cylinder
Complete Rebuild Kit

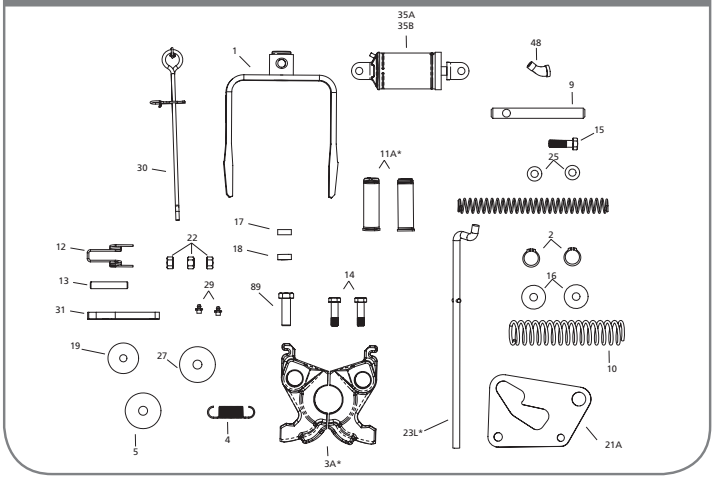

ITEM	DESCRIPTION	PART NUMBER	QTY.	WEIGHT LBS [KG]
1	Yoke	XA-07295	1	5.87 [2.66]
2	Ring, Retaining	XB-07398	2	0.10 [0.04]
3A*	Lock Jaw Set	XA-08332-1	1	7.69 [3.49]
4	Spring, Extension	XB-07628	1	0.08 [0.04]
9	Shaft, Yoke	XA-1706-1	1	0.83 [0.38]
10	Spring, Compression	XB-1505	1	0.61 [0.28]
11A*	Pin, Lock	XA-07292-1	2	1.08 [0.49]
12	Spring, Torsion	XB-2149	1	0.06 [0.03]
13	Pin, Spring, .50" Diameter x 2.75" Long	XB-21-S-500-2750	1	0.02 [0.01]
14	HHCS, .50" - 20 X 1.75"	XB-T-95-5	2	
15	HHCS, .50"-20 x 1.75" Gr 5 Zinc Plate, Nylock	XB-2083	1	0.13 [0.06]
16	Washer	XB-08559	3	0.06 [0.03]
17	Roller, .52" I.D. x 1" O.D. x .38" Long	XA-1029	1	0.06 [0.03]
18	Roller, .66" I.D. x 1" O.D. x .38" Long	XA-1507-1	1	0.05 [0.02]
19	Washer, .66" I.D. x 2.25" O.D.	XB-07431	2	0.19 [0.09]
21A	Plate S/A, Cam	XA-08988	1	2.26 [1.03]

ITEM	DESCRIPTION	PART NUMBER	QTY.	WEIGHT LBS [KG]
22	Lock Nut, .50"-20 Gr C, Cam Plates, Bracket Pins , Air Release	XB-T-69-A	3	0.04 [0.02]
23L*	Release Handle, Left-Hand, See RK-09063	XA-09041	1	1.00 [0.45]
24B	Spring, Manual Release	XB-07291	1	0.20 [0.09]
25	Washer, .53" I.D. x 1.06" O.D.,	XB-PW-1732-1-116	2	0.02 [0.01]
27	Spacer, Cam	XA-09040	1	0.54 [0.24]
29	Fittings, Grease	XB-H-38	2	0.01 [0.005]
30	Handle, Secondary Lock Release	XA-3546	1	0.32 [0.15]
31	Bar, Lock	XA-3528	1	0.61 [0.28]
35A	Cylinder Assembly, Air, Aluminum	XA-11702	1	3.98 [1.81]
35B	Cylinder Assembly, Air, Stainless Steel	XA-2524-R-13-1	1	4.43 [2.01]
48	Elbow, 45° Street	XB-698	1	0.06 [0.03]
89	HHCS .63"-18 X 2.00"	XB-010035	1	0.24 [0.11]

*Not sold individually - must be purchased in kit.

 Amendments and errors reserved. © SAF-HOLLAND, Inc.

SAF-HOLLAND Group

RK-06535
Kit, Air (Coiled Line)

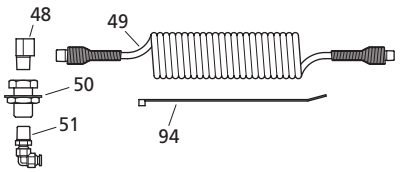

RK-09646
Air Release Kit - Coil & Line

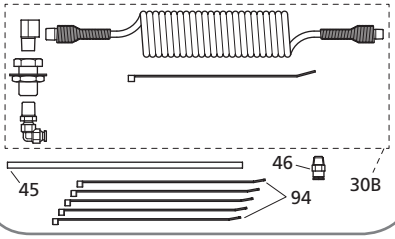

RK-6811
Air Fitting Kit

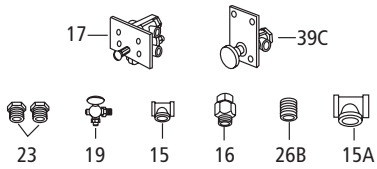

RK-6813
Air Tank Bracket Kit

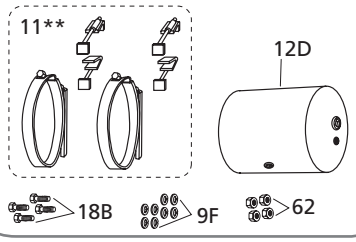

ITEM	DESCRIPTION	PART NUMBER	QTY.	WEIGHT LBS [KG]
2	Retaining Ring, 1" Diameter	XB-07398	2	0.01 [0.005]
3A*	Lock Set, See RK-351-08332-1	XA-08332-1	1	7.65 [3.47]
4	Spring, Extension	XB-07628	1	0.08 [0.04]
11A*	Pin, Lock, See RK-07292-1	XA-07292-1	2	1.08 [0.49]
30B	Kit, Air Line (Coiled Line)	RK-06535	1	7.50 [3.40]
32	Never-Seez, 7.5g Tube	XB-02967	1	0.02 [0.01]
38	Washer, 1.19" I.D. x 1.58" O.D.	XB-05859-1	4	0.01 [0.005]
45	Tubing, .25" O.D. X 35' Nylon	XA-06565-35	1	0.56 [0.25]
46	Fitting, Male Pipe	XB-11251	1	0.03 [0.01]
48	Elbow, 90° Street, See RK-06535	XB-01996	1	0.09 [0.04]
49	Hose Assembly, Air	XB-06583	1	N/A
50	Fitting, Bulkhead, .25" NPT Female	XB-01959	1	0.18 [0.08]
51	Elbow, Male 90° Swivel	XB-06570	1	N/A
94	Nylon Cable Ties (RK-06535)	XB-01961	1	N/A
	Nylon Cable Ties (RK-09646)		5	N/A

*Not sold individually - must be purchased in kit.

XL-FW10081PM-en-US Rev D 2016-03-01 Amendments and errors reserved. © SAF-HOLLAND, Inc.

THIS PAGE INTENTIONALLY LEFT BLANK

 Amendments and errors reserved. © SAF-HOLLAND, Inc.

FW2080 Series Exploded View



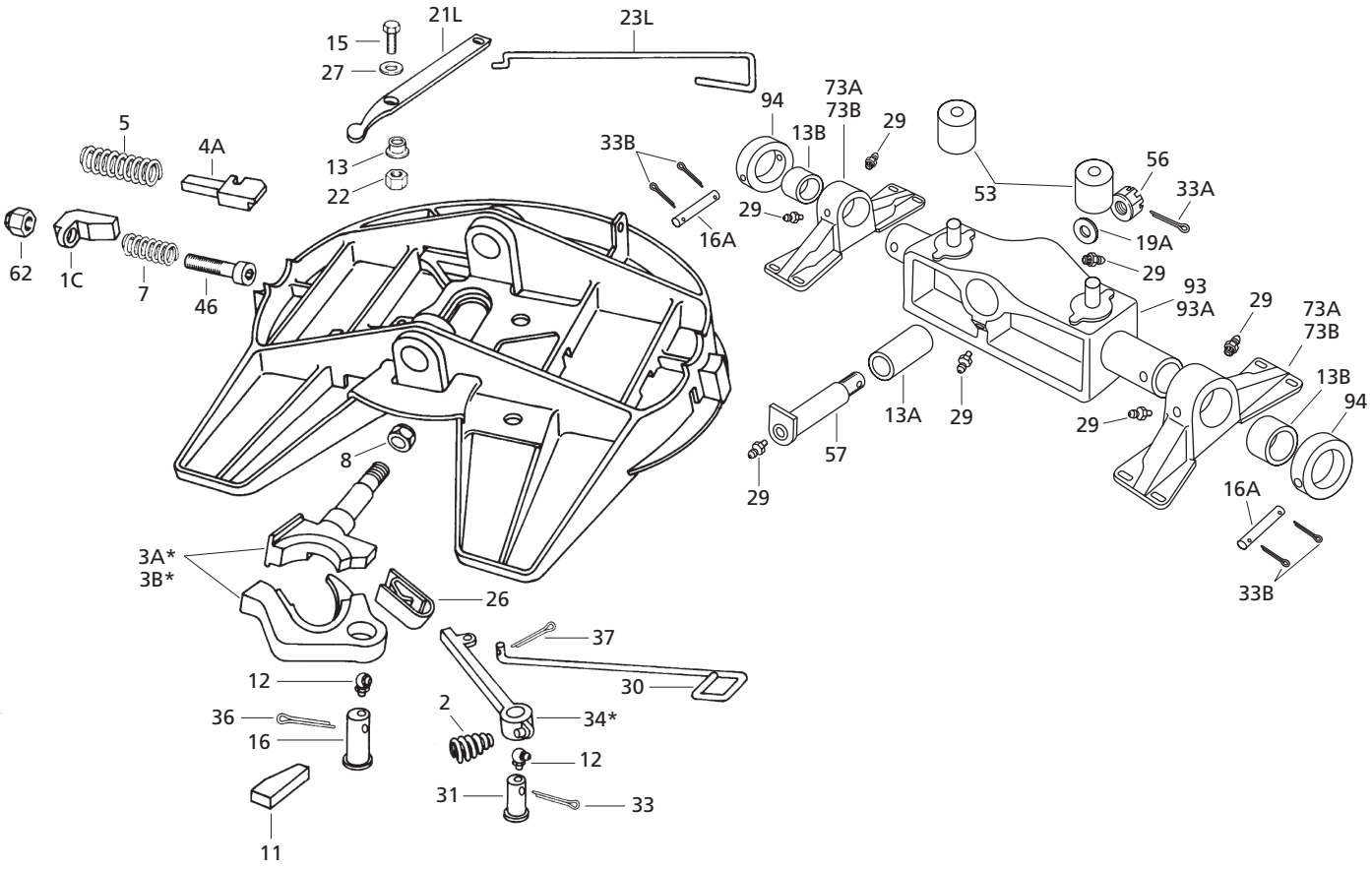

DISCONTINUED MODEL SERVICE PARTS ONLY

Please contact
Customer Service
for part availability
888.396.6501

FW2080 W/Lockout

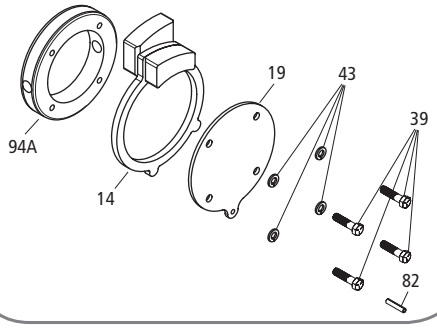

XL-FW100881PW-en-US Rev D 2016-03-01 Amendments and errors reserved. © SAF-HOLLAND, Inc.

ITEM	DESCRIPTION	PART NUMBER	QTY.	WEIGHT LBS [KG]
1C	Adjusting Wedge	XD-3123-1	1	1.18 [0.54]
2	Spring	XB-1028-2	1	0.19 [0.09]
3A*	Lock Set For 2" Kingpin, See RK-65024	XA-FW-104-D	1	16.58 [7.52]
3B*	Lock Set For 3-1/2" Kingpin, See RK-65024-1	XA-FW-104-03	1	13.85 [6.28]
4A	Plunger	XA-1104	1	3.09 [1.40]
5	Compression Spring (Red)	XB-1007	1	0.32 [0.15]
7	Compression Spring	XB-403	1	0.07 [0.03]
8	Jam Nut 1"-14	XB-04473	1	0.13 [0.06]
11	Adjusting Block	XA-05768	1	0.44 [0.20]
12	Lube Fitting (90°)	XB-0769	2	0.02 [0.01]
13	Bushing	XB-02949	1	0.01 [0.005]
13A	Cast Iron Bushing	XA-06110	1	6.10 [2.77]
13B	Cast Iron Bushing	XA-1596	2	3.57 [1.62]
14	Lockout S/A (FW2080-0778)	XA-0786	2	3.70 [1.68]
15	Hex Head Cap Screw 1/2"-20x1-3/4"	XB-2083	1	0.13 [0.06]
16	Lock Pin	XA-FW-108-D	1	2.37 [1.08]
16A	Pin	XA-1584-2	2	0.57 [0.26]
19	Plate, Cover (FW2080-0778)	XA-0781	2	1.49 [0.68]
19A	Washer	XA-782	1	0.89 [0.40]
21L	Release Lever	XA-1005-FDS	1	1.95 [0.88]
22	Hex Lock Nut 1/2"-20	XB-T-69-A	1	0.04 [0.02]
23L	Release Handle	XA-1117-13	1	1.84 [0.83]
26	Spring	XA-FW-128	1	0.57 [0.26]
27	Plain Washer	XB-T-49	1	0.04 [0.02]
29	Grease Zerk	XB-H-38	7	0.01 [0.005]
30	Release Handle	XA-FW-138	1	0.89 [0.40]
31	Lock Pin	XA-1016-C	1	0.92 [0.42]
33	Cotter Pin 1/4" x 2"	XB-5	1	0.05 [0.02]
33A	Cotter Pin 5/16" x 3-1/2"	XB-781-1	1	0.08 [0.04]
33B	Cotter pin 3/16" x 1-1/4"	XB-382	4	0.01 [0.005]
34*	Secondary Lock Arm, See RK-65025	XA-FW-137-2	1	3.20 [1.45]
36	Cotter Pin 1/4" x 2-1/2"	XB-T-60	1	0.04 [0.02]
37	Cotter Pin 1/8" x 1"	XB-16	1	0.01 [0.005]
39	HHCS 3/8"-16 x 1-1/2" (FW2080-0778)	XB-C-375-C-150	8	0.06 [0.03]
43	Washer, Lock 3/8" (FW2080-0778)	XB-T-61	8	0.01 [0.005]
46	Socket Head Cap Screw	XB-2001	1	0.42 [0.19]
53	Rubber Cushion	XB-70	2	2.04 [0.92]
56	Hex Slotted Nut 2-1/4"-4-1/2" Socket	XB-780-1	1	1.69 [0.77]
57	Bolt Sub-assembly	XA-1589-1	1	37.79 [17.14]
62	Lock Nut 5/8"-11	XB-HNH-58-C	1	0.08 [0.03]
73A	Bracket Only	XA-1595	2	37.50 [17.01]
73B	Bracket Sub-assembly (Includes Grease Zerks and Bushing)	XA-1595-A	2	40.90 [18.55]
82	Pin, Spring (FW2080-0778)	XB-21-S-250-1250	2	0.02 [0.01]
93	Rocker Arm Only	XA-05952	1	240.00 [108.86]
93A	Rocker Arm Sub-assembly (Includes Grease Zerks and Bushing)	XA-05952-A	1	247.35 [112.20]
94	Collar	XA-1597	2	4.25 [1.93]
94A	Collar (FW2080-0778)	XA-0784	2	4.12 [1.87]
—	**Kingpin Gage (Not Shown)	TF-0110	1	0.48 [0.22]
—	**3-1/2" Kingpin Lock Tester (Not Shown)	TF-TLN-1500	1	31.10 [14.11]
—	**2" Kingpin Lock Tester (Not Shown)	TF-TLN-5001	1	22.40 [10.16]

* Not sold individually - must be purchased in kit.
** Not included in Rebuild Kits

REPLACEMENT TOP PLATE PART NUMBERS	
PART NUMBER	DESCRIPTION
XA-2081-DA-P	LH Manual Release 2" Kingpin
XA-2081-DAU-P	Air Release 2" Kingpin
XA-2081-OA-P	LH Manual Release 3 1/2" Kingpin
XA-2081-OAU-P	Air Release 3 1/2" Kingpin

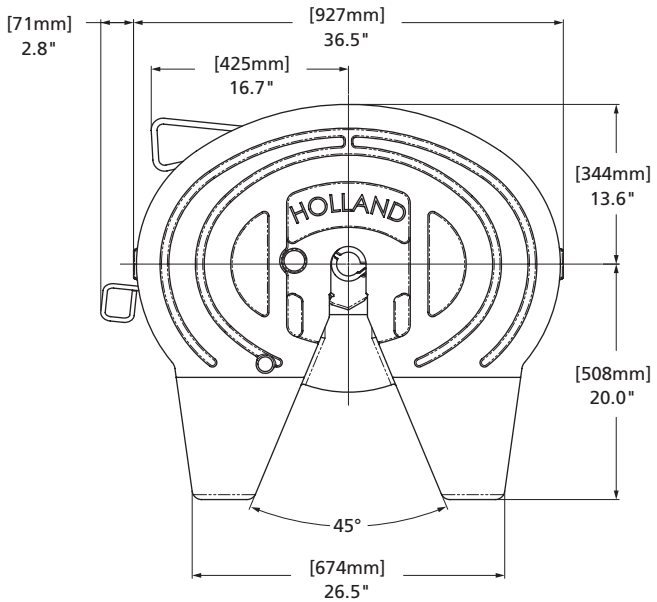

 Amendments and errors reserved. © SAF-HOLLAND, Inc.

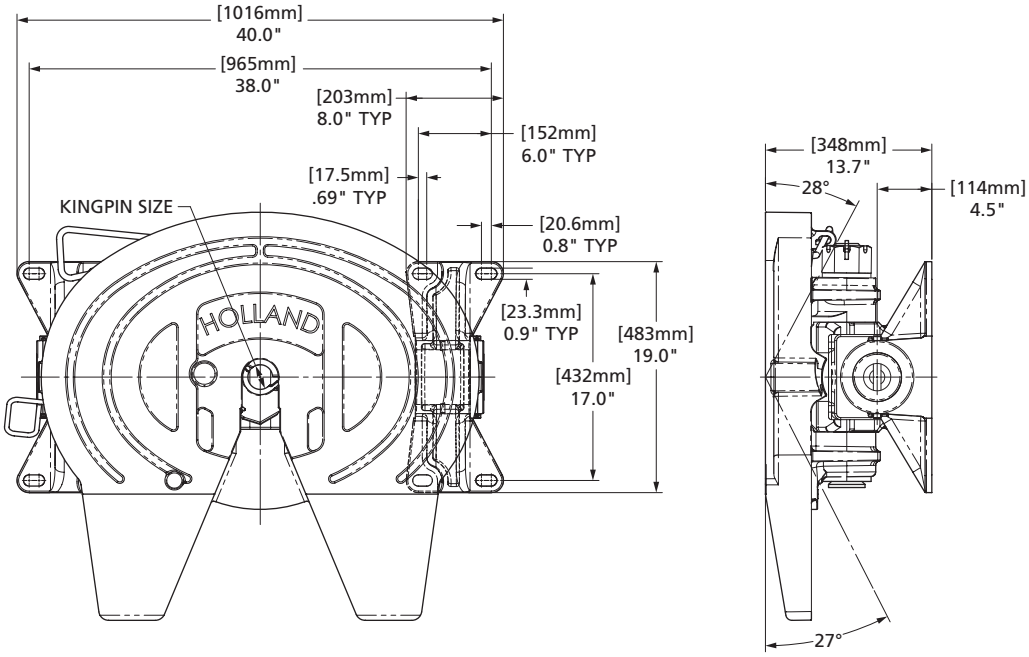

FW2080-D, FW2080-DU, FW2080-O, FW2080-OU

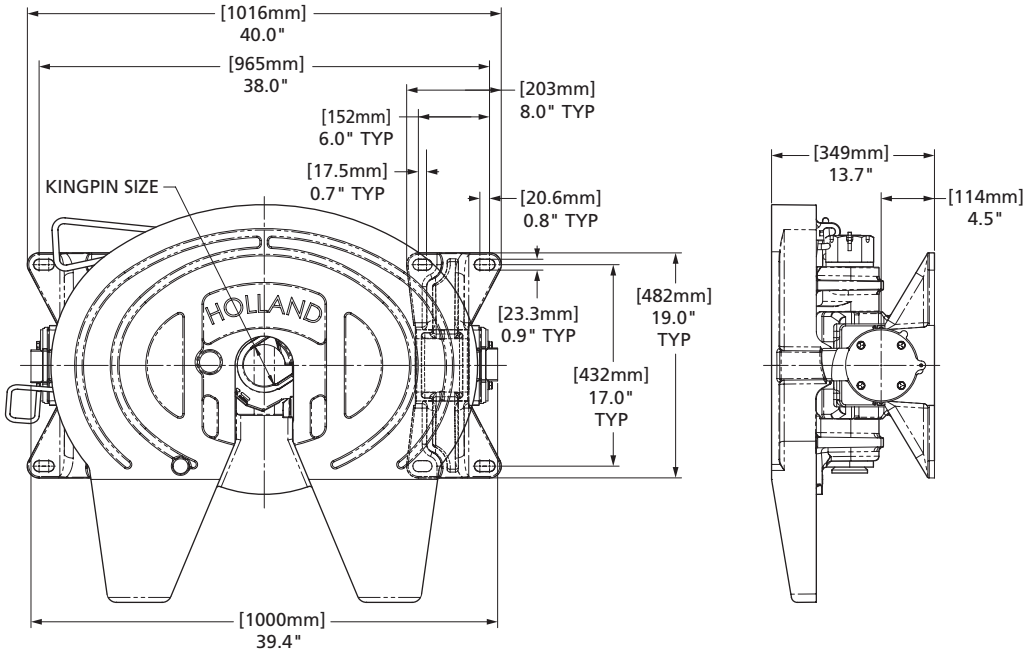

FW2080-0778, FW2080-0778-1

FIFTH WHEEL ASSEMBLY NUMBER	REPLACEMENT BRACKET PART NUMBER	RELEASE TYPE	KINGPIN TYPE	OSCILLATOR LOCKOUT	WEIGHT LBS [KG]
FW2080-D	XA-1595-A	Manual	2.0" [51]	No	805.0 [365.2]
FW2080-DU		Air	2.0" [51]	No	808.0 [366.5]
FW2080-O		Manual	3.5" [89]	No	800.0 [362.9]
FW2080-OU		Air	3.5" [89]	No	803.0 [364.2]
FW2080-0778		Manual	3.5" [89]	Yes	800.0 [362.9]
FW2080-0778-1		Manual	2.0" [51]	Yes	800.0 [362.9]

XL-FW10081PM-en-US Rev D 2016-03-01 Amendments and errors reserved. © SAF-HOLLAND, Inc.

RK-65024
Kit, Lock 2" (XA-71-DA, XA-101-DA)

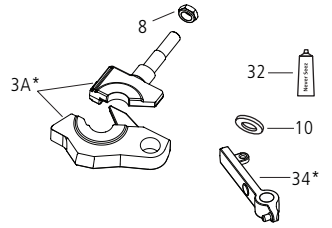

RK-65024-1
Kit, Lock 3 1/2" (XA-71-OA, XA-101-OA)

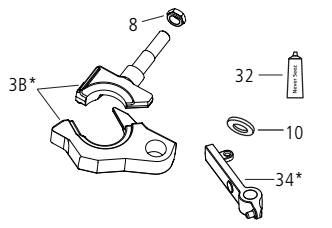

RK-65025
Kit, H.D. Secondary Lock

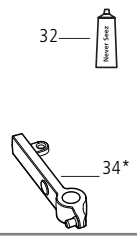

RK-65012
Complete Rebuild Kit (XA-2081-DA)

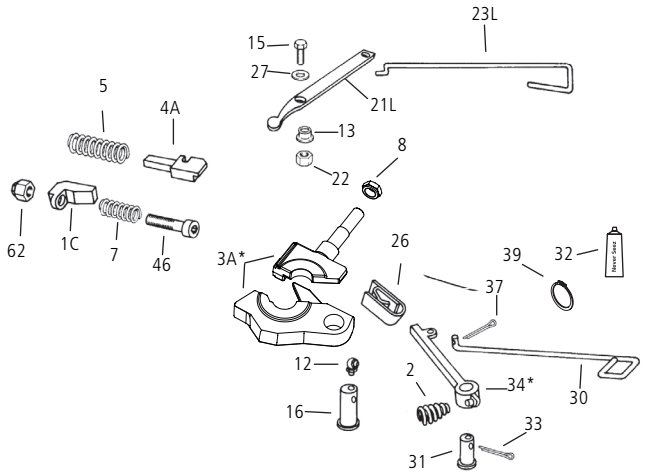

RK-65013
Fifth Wheel Complete Rebuild Kit (XA-2081-OA)

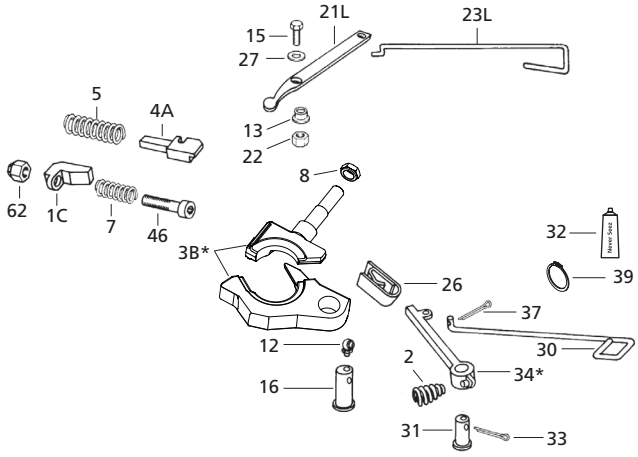

ITEM	DESCRIPTION	PART NUMBER	QTY.	WEIGHT LBS [KG]
1C	Wedge, Adjusting	XD-3123-1	1	1.18 [0.54]
2	Spring	XB-1028-2	1	0.19 [0.09]
3A*	Lock Set for 2" Kingpin	XA-FW-104-D	1	16.58 [7.52]
3B*	Lock Set for 3.5" Kingpin	XA-FW-104-03	1	13.85 [6.28]
4A	Plunger	XA-1104	1	3.09 [1.40]
5	Spring, Plunger	XB-1007	1	0.32 [0.15]
7	Spring, Manual Release	XB-403	1	0.07 [0.03]
8	Nut, Jam 1"- 14	XB-04473	1	0.13 [0.06]
10	Washer, Lock, 1" I.D. x 1.7" O.D.	XB-10327	1	0.08 [0.04]
12	Lube fitting (90°)	XB-0769	1	0.02 [0.01]
13	Nylon bushing	XB-02949	1	0.01 [0.005]
15	HHCS, .50"-20 x 1.75" Gr 5 Zinc Plate, Nylock	XB-2083	1	0.13 [0.06]
16	Pin, Lock	XA-FW-108-D-15	1	2.37 [1.08]
21L	Lever, Release, Left-Hand	XA-1005-FDS	1	1.95 [0.88]

ITEM	DESCRIPTION	PART NUMBER	QTY.	WEIGHT LBS [KG]
22	Lock Nut, .50"-20 Gr C	XB-T-69-A	1	0.04 [0.02]
23L	Handle, Release	XA-1117-13	1	1.84 [0.83]
26	Spring	XA-FW-128	1	0.57 [0.26]
27	Washer, .56" I.D. x 1.38" O.D.	XB-T-49	1	0.04 [0.02]
30	Handle, Secondary Lock Release	XA-FW-138	1	0.89 [0.40]
31	Pin, Manual Secondary Lock	XA-1016-C	1	0.92 [0.42]
32	Never-Seez, 7.5g Tube	XB-02967	1	N/A
33	Pin, Cotter, .25" Diameter x 2" Long	XB-5	1	0.05 [0.02]
34*	Arm, Secondary Lock	XA-FW-137-2	1	3.20 [1.45]
37	Pin, Cotter, .13" Diameter x 1" Long	XB-16	1	0.01 [0.005]
39	Retaining Ring, 1.5" Dia.	XB-09153	1	0.01 [0.005]
46	SHCS, .63"-11 x 3.75" Long	XB-2001	1	0.42 [0.19]
62	Nut, Lock .63" - 11	XB-HNH-58-C	1	0.08 [0.03]

*Not sold individually - must be purchased in kit.

 Amendments and errors reserved. © SAF-HOLLAND, Inc.

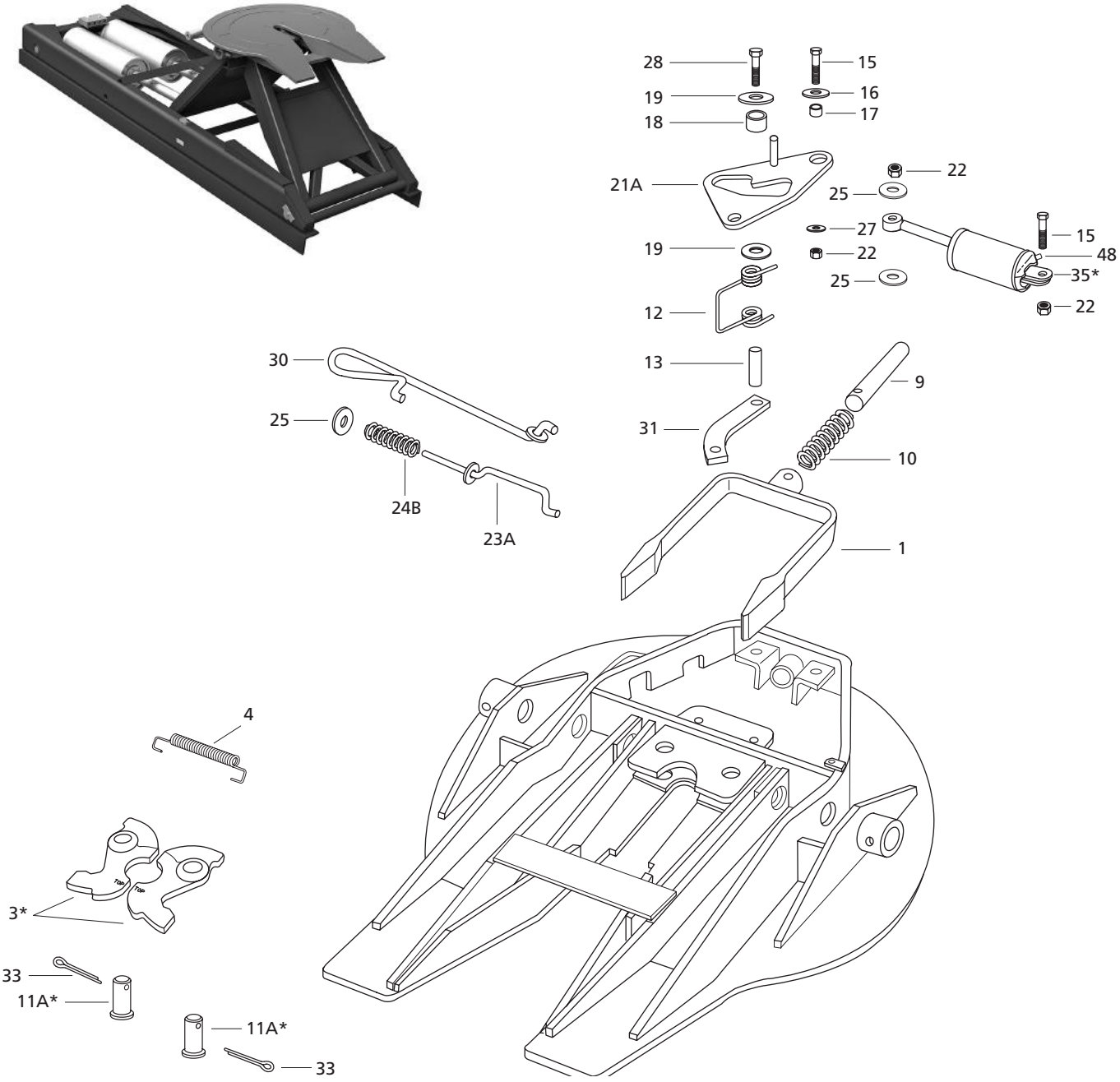

XL-FW10081PM-en-US Rev D 2016-03-01 Amendments and errors reserved. © SAF-HOLLAND, Inc.

ITEM	DESCRIPTION	PART NUMBER	QTY.	WEIGHT LBS [KG]
1	Yoke	XA-07295-THK	1	5.87 [2.66]
3*	Lock Jaw Set, See RK-63504	XA-1704-X	1	7.20 [3.27]
4	Spring, Extension	XB-GT-13-1	1	0.07 [0.03]
9	Shaft, Yoke	XA-1706-1	1	0.83 [0.38]
10	Spring, Compression	XB-1505	1	0.61 [0.28]
11A*	Pin, Lock	XA-1313	2	1.13 [0.51]
12	Spring, Torsion	XB-2149	1	0.06 [0.03]
13	Pin, Spring, .50" Diameter x 2.75" Long	XB-21-S-500-2750	1	0.02 [0.01]
15	HHCS, .50"-20 x 1.75" Gr 5 Zinc Plate, Nylock	XB-2083	2	0.13 [0.06]
16	Washer, .56" I.D. x 1.75" O.D.	XB-10267	1	0.12 [0.05]
17	Roller, .52" I.D. x 1" O.D. x .38" Long	XA-1029	1	0.06 [0.03]
18	Roller, .66" I.D. x 1" O.D. x .38" Long	XA-1507-1	1	0.05 [0.02]
19	Washer, .66" I.D. x 2.25" O.D.	XB-1030-1	2	0.19 [0.09]
21A	Plate S/A, Cam	XA-1705-11	1	1.86 [0.84]
22	Lock Nut, .50"-20 Gr C, Cam Plates, Bracket Pins, Air Release	XB-T-69-A	3	0.04 [0.02]
23A	Release Handle, Air Release	XA-1707-16	1	1.00 [0.45]
24B	Spring, Manual Release	XB-1028-1	1	0.10 [0.04]
25	Washer, .53" I.D. x 1.06" O.D.	XB-PW-1732-1-116	3	0.02 [0.01]
27	Washer, .56" I.D. x 1.38" O.D., Manual Release Washer, .56" I.D. x 1.38" O.D., Air Release	XB-T-49	1	0.04 [0.02]
28	HHCS, .63"-18 x 1.75" Gr 8	XB-CX-58-F-134	1	0.21 [0.10]
30	Release Handle, Manual	XA-3544-1-A	1	0.22 [0.10]
31	Bar, Lock	XA-3528	1	0.61 [0.28]
33	Pin, Cotter, .25" Diameter x 2" Long	XB-5	2	0.05 [0.02]
35A*	Cylinder, Air (XA-2801-AX-1)	XA-11694	1	4.15 [1.88]
35B*	Cylinder, Air (XA-2801-AX-1)	XA-2524-03185-1	1	4.56 [2.07]
35C*	Cylinder, Air (XA-2801-AX)	XA-11712	1	3.91 [1.77]
35D*	Cylinder, Air (XA-2801-AX)	XA-2524-R-13-X	1	3.80 [1.72]
48	Elbow, 90° Street, See RK-06535	XB-01996	1	0.09 [0.04]

*Not sold individually - must be purchased in kit.

REPLACEMENT TOP PLATE PART NUMBERS	
PART NUMBER	DESCRIPTION
XA-2801-AX-1P	90° Street Elbow - 2" Stroke
XA-2801-03185-1P	No Fittings - 2" Stroke
XA-2801-03185-2P	No Fittings - 2" Stroke
XA-2801-03185-3P	90° Push Connect -2" Stroke
XA-2801-03185-4P	(2) 90° Push Connect - 2" Stroke
XA-2801-03185-5P	(2) 90° Push Connect - 3.6" Stroke
XA-2801-07486-1S	90° Street Elbow - 2" Stroke With Lock Down

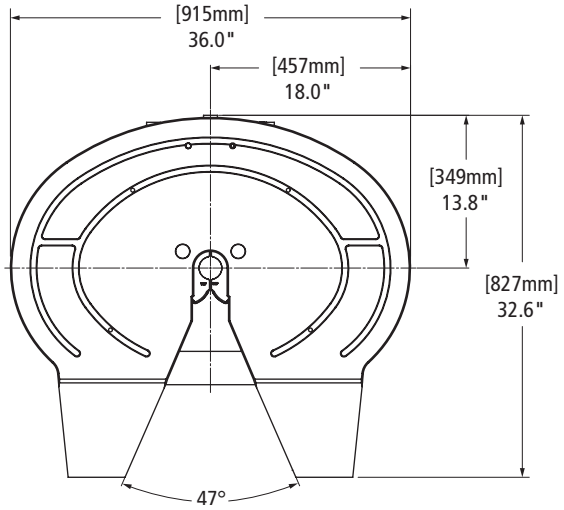

 Amendments and errors reserved. © SAF-HOLLAND, Inc.

SAF-HOLLAND Group

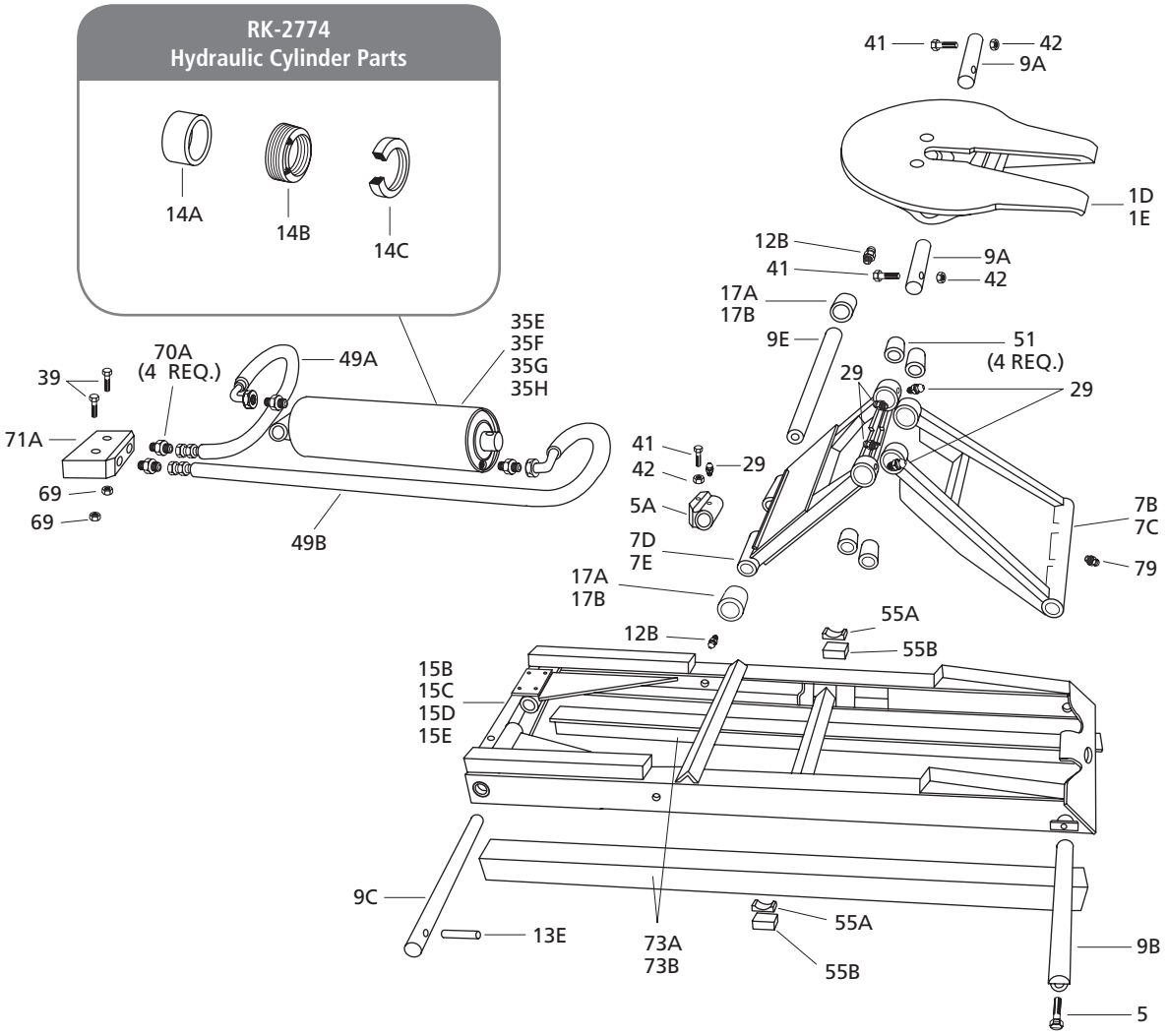

ITEM	DESCRIPTION	PART NUMBER	QTY.	WEIGHT LBS [KG]
1D	Fifth Wheel Top Plate Sub-Assembly	XA-2801-AX-1	1	297.00 [134.72]
1E		XA-2801-07486-1		321.00 [145.60]
5	HHCS, 1/2-20 x 3/4"	XB-6834	1	0.08 [0.04]
5A	Clevis Sub-Assembly	XA-2811	1	13.54 [6.14]
7B	Rear Support Assembly	XA-2808-B	1	170.04 [77.13]
7C		XA-2908-B		
7D	Front Support Assembly	XA-2807-B	1	152.54 [69.19]
7E		XA-2907-B		
9A	Fifth Wheel Pivot Shaft	XA-2809	2	9.10 [4.13]
9B	Rear Pivot Shaft	XA-2895	1	28.23 [12.80]
9C	Front Pivot Shaft	XA-2894	1	28.43 [12.90]
9E	Axle Shaft	XA-2893	1	27.37 [12.41]
12B	Grease Fitting	XB-767	2	0.01 [0.005]
13E	Rollpin	XB-21-S-375-3000	1	0.02 [0.01]
14A	Bearing	XA-2774-2	1	0.42 [0.19]
14B	Vee Packing	XB-2774-4	1	0.13 [0.06]
14C	Scraper, Rod	XB-2774-3	1	0.06 [0.03]
15B	Frame Sub-Assembly	XA-2806-2	1	668.44 [303.20]
15C		XA-2906		412.83 [187.26]
15D		XA-06288		427.45 [193.89]
15E		XA-08172		490.64 [222.55]

ITEM	DESCRIPTION	PART NUMBER	QTY.	WEIGHT LBS [KG]
17A	Wheel	XA-2756-2	2	2.56 [1.16]
17B		XA-2756-3		10.54 [4.78]
29	Grease Fitting	XB-H-38	5	0.01 [0.005]
35E	Cylinder Sub-Assembly	XA-2810-1	1	199.00 [90.26]
35F		XA-2710-1		167.00 [75.75]
35G		XA-2710-87		167.00 [75.75]
35H		XA-2810-87		200.00 [90.72]
39	Hex Head Bolt, 3/8"-16 x 21/4"	XB-C-38-C-214	2	0.09 [0.04]
41	Hex Head Bolt, 1/2"-13 x 4"	XB-BR-12-C-4	3	0.26 [0.12]
42	Lock Nut, 1/2"-13	XB-0103	3	0.04 [0.02]
49A	Hose Assembly	XB-2936	1	1.03 [0.47]
49B	Hose Assembly	XB-2936-1	1	1.23 [0.56]
51	Bronze Bearing	XA-0861	4	0.76 [0.34]
55A	Rest Pad	XA-06245	2	0.47 [0.21]
55B	Riser Block	XA-09498	2	1.97 [0.89]
69	Lock Nut, 3/8"-16	XB-338	2	0.02 [0.01]
70A	Male Connector	XB-2928	4	0.19 [0.09]
71A	Hydraulic Pump Piping Manifold	XB-2930	1	4.00 [1.81]
73A	Mounting Angle	XA-292-14	2	95.20 [43.18]
73B		XA-292-12		80.00 [36.29]
79	45° Grease Fitting	XB-H-38-C	1	0.02 [0.01]
-	Hydraulic Cylinder Rod Bearing Rebuild Kit	RK-2774	N/A	0.55 [0.25]

XL-FW10081PM-en-US Rev D 2016-03-01 Amendments and errors reserved. © SAF-HOLLAND, Inc.

FW2800-5X & FW2900-5X Twin Cylinder Elevating Fifth Wheel Parts Explosion

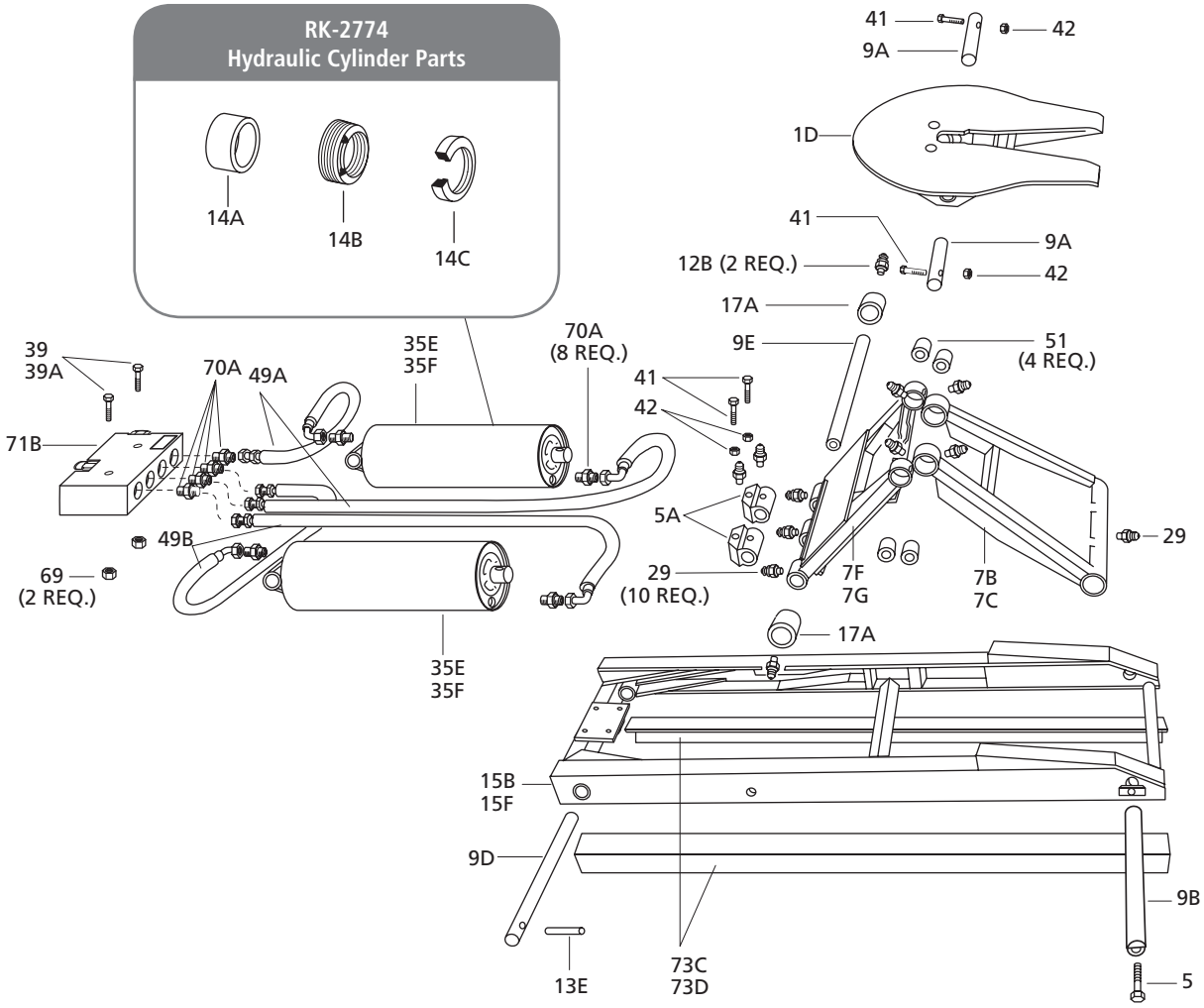

ITEM	DESCRIPTION	PART NUMBER	QTY.	WEIGHT LBS [KG]
1D	Fifth Wheel Top Plate Sub-Assembly	XA-2801-AX-1	1	297.00 [134.72]
5	HHCS, 1/2-20 x 3/4"	XB-6834	1	0.08 [0.04]
5A	Clevis Sub-Assembly	XA-2811	2	13.54 [6.14]
7B	Rear Support Assembly	XA-2808-B	1	170.04 [77.13]
7C	Rear Support Assembly	XA-2908-B	1	170.04 [77.13]
7F	Front Support Assembly	XA-2807-2-B	1	175.44 [79.58]
7G	Front Support Assembly	XA-2907-1-B	1	155.48 [70.52]
9A	Fifth Wheel Pivot Shaft	XA-2809	2	9.10 [4.13]
9B	Rear Pivot Shaft	XA-2895	1	28.23 [12.80]
9D	Front Pivot Shaft	XA-2894-2	1	28.32 [12.85]
9E	Axle Shaft	XA-2893	1	27.37 [12.41]
12B	Grease Fitting	XB-767	2	0.01 [0.005]
13E	Rollpin	XB-21-S-375-3000	1	0.02 [0.01]
14A	Bearing	XA-2774-2	1	0.42 [0.19]
14B	Vee Packing	XB-2774-4	1	0.13 [0.06]
14C	Scraper, Rod	XB-2774-3	1	0.06 [0.03]
15B	Frame Sub-Assembly	XA-2806-2	1	668.44 [303.20]
15F	Frame Sub-Assembly	XA-2906-1	1	603.87 [273.91]

ITEM	DESCRIPTION	PART NUMBER	QTY.	WEIGHT LBS [KG]
17A	Wheel	XA-2756-2	2	2.56 [1.16]
29	Grease Fitting	XB-H-38	10	0.01 [0.005]
35E	Cylinder Sub-Assembly	XA-2810-1	2	199.00 [90.26]
35F	Cylinder Sub-Assembly	XA-2710-1	2	167.00 [75.75]
39	Hex Head Bolt, 3/8"-16 x 2-1/4"	XB-C-38-C-214	2	0.09 [0.04]
39A	HHCS, 3/8"-16 x 2-3/4"	XB-08894	2	0.10 [0.05]
41	Hex Head Bolt, 1/2"-13 x 4"	XB-BR-12-C-4	4	0.26 [0.12]
42	Lock Nut, 1/2"-13	XB-0103	4	0.04 [0.02]
49A	Hose Assembly	XB-2936	2	1.03 [0.47]
49B	Hose Assembly	XB-2936-1	2	1.23 [0.56]
51	Bronze Bearing	XA-0861	4	0.76 [0.34]
69	Hex Head Lock Nut, 3/8"-16	XB-338	2	0.02 [0.01]
70A	Male Connector	XB-2928	8	0.19 [0.09]
71B	Hydraulic Pump Piping Manifold	XB-2930-A	1	4.00 [1.81]
73C	Mounting Angle	XA-292-10	2	88.20 [40.01]
73D	Mounting Angle	XA-292-15	2	77.90 [35.33]
-	Hydraulic Cylinder Rod Bearing Rebuild Kit	RK-2774	N/A	0.55 [0.25]

 Amendments and errors reserved. © SAF-HOLLAND, Inc.

FW2800-X & FW2900-X Single Cylinder Elevating Fifth Wheel Piping Diagram Parts List

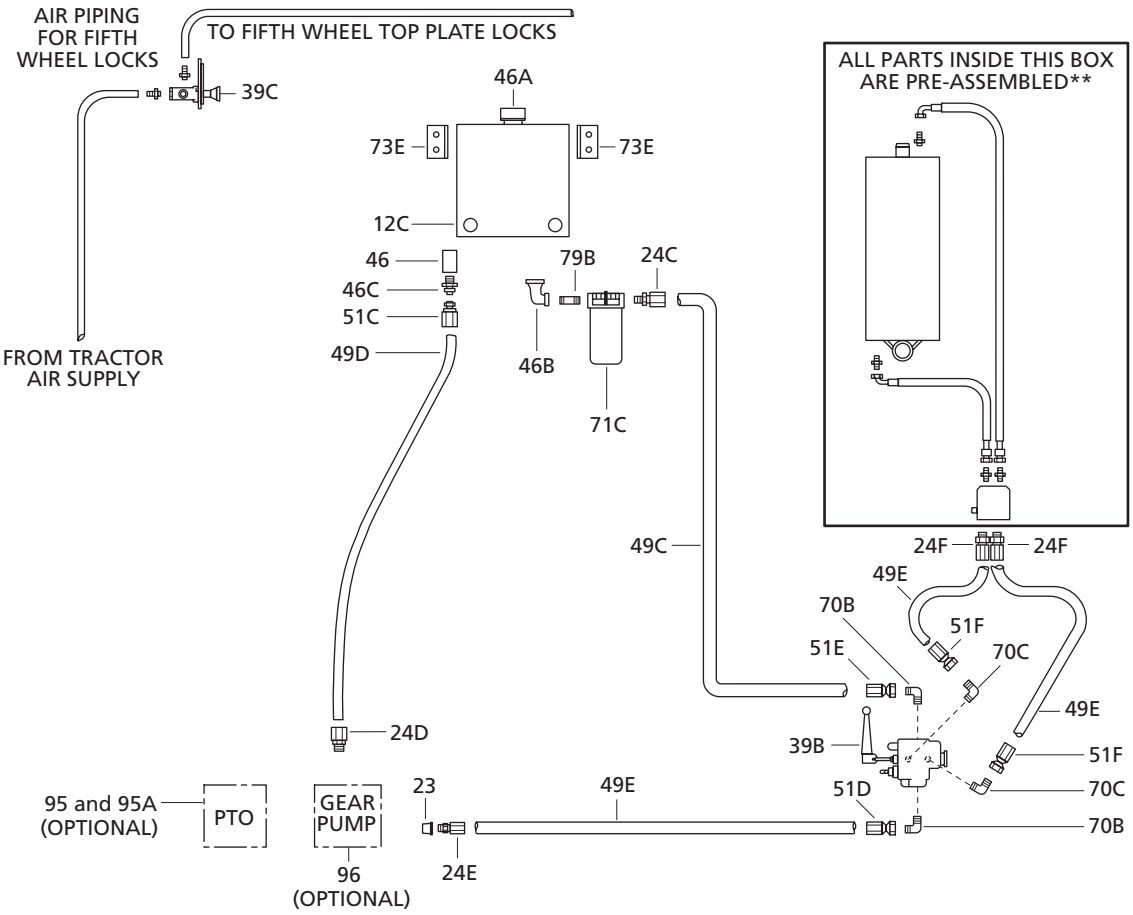

ITEM	DESCRIPTION	PART NUMBER	QTY.	WEIGHT LBS [KG]
12C*	Oil Tank	XB-01730	1	35.00 [15.88]
23	Reducer Bushing 1"-11-1/2"/1/2"-14 NPT	XB-04478	1	0.35 [0.16]
24C	Straight Male Hose Fitting 3/4"-14 NPT, 5/8" I.D. Hose	XB-2793	1	0.43 [0.20]
24D	Straight Male Hose Fitting 1"-11-1/2" NPT x 1-1/8" I.D. Hose	XB-2794-1	1	0.85 [0.39]
24E	Straight Male Hose Fitting 1/2"-14 NPT x 1/2" I.D. Hose	XB-2791	1	0.34 [0.15]
24F	Straight Male Hose Fitting, 3/4"-14 NPT, 1/2" I.D. Hose	XB-2792	2	0.40 [0.18]
39B	Control Valve	XB-2782-1	1	15.15 [6.87]
39C	Fifth Wheel Lock Control Valve	XB-2556	1	0.36 [0.16]
46	Pipe Coupler – 1-1/4" NPT	XB-02208	1	0.69 [0.31]
46A*	Filler Cap and Breather	XB-01786	1	0.27 [0.12]
46B	90° Reducing Elbow	XB-02209	1	0.73 [0.33]
46C	Male Adapter – 1-5/8"-12 JIC, 1-1/4"-11-1/2" NPTF	XB-2790	1	0.74 [0.34]
49C	5/8" I.D. Medium Pressure Oil Hose, 5-1/2 ft. Long	XB-2785	1	2.21 [1.00]

ITEM	DESCRIPTION	PART NUMBER	QTY.	WEIGHT LBS [KG]
49D	1-1/8" I.D. Medium Pressure Oil Hose, 5-1/2" Long	XB-2786-1	1	11.67 [5.29]
49E	1/2" I.D. Medium Pressure Oil Hose	XB-2784	3	3.19 [1.44]
51C	Straight Swivel Fitting 1-5/8"-12 JIC x 1-1/8" I.D. Hose	XB-2795	1	1.19 [0.54]
51D	1-1/6"-12 JIC, 1/2" I.D. Hose, SAE 37° Flare	XB-2937	1	0.52 [0.23]
51E	1-1/6"-12 JIC, 5/8" I.D. Hose, 37° Flare (JIC) Swivel	XB-2932	1	0.47 [0.21]
51F	SAE 37° Flare (JIC) Swivel, 7/8"-14 JIC, 1/2" I.D. Hose	XB-2938	2	0.35 [0.16]
70B	90° Elbow 1-1/6"-12 JIC, 3/4"-14 NPT	XB-2934	2	0.45 [0.20]
70C	90° Elbow 7/8"-14 JIC, 1/2"-14 NPT	XB-2939	2	0.31 [0.14]
71C	Hydraulic Oil Filter	XB-2783	1	1.60 [0.73]
73E*	Mounting Brackets	XA-01909	2	1.27 [0.58]
79B	3/4" Pipe Nipple	XB-2798-1	1	0.15 [0.07]
95	Power Take-Off (Optional)	XB-2781-1	1	28.25 [12.81]
95A	Power Take-Off With Air Operated Shifter (Optional)	XB-2781-1-A	1	35.00 [15.88]
96	Hydraulic Gear Pump (Optional), See RK-2800-11-G	XB-04476	1	32.15 [14.58]

* Items 46A, 73E and 12C are available individually or as XA-01911 tank assembly.
** See page 316

XL-FW10081PM-en-US Rev D 2016-03-01 Amendments and errors reserved. © SAF-HOLLAND, Inc.

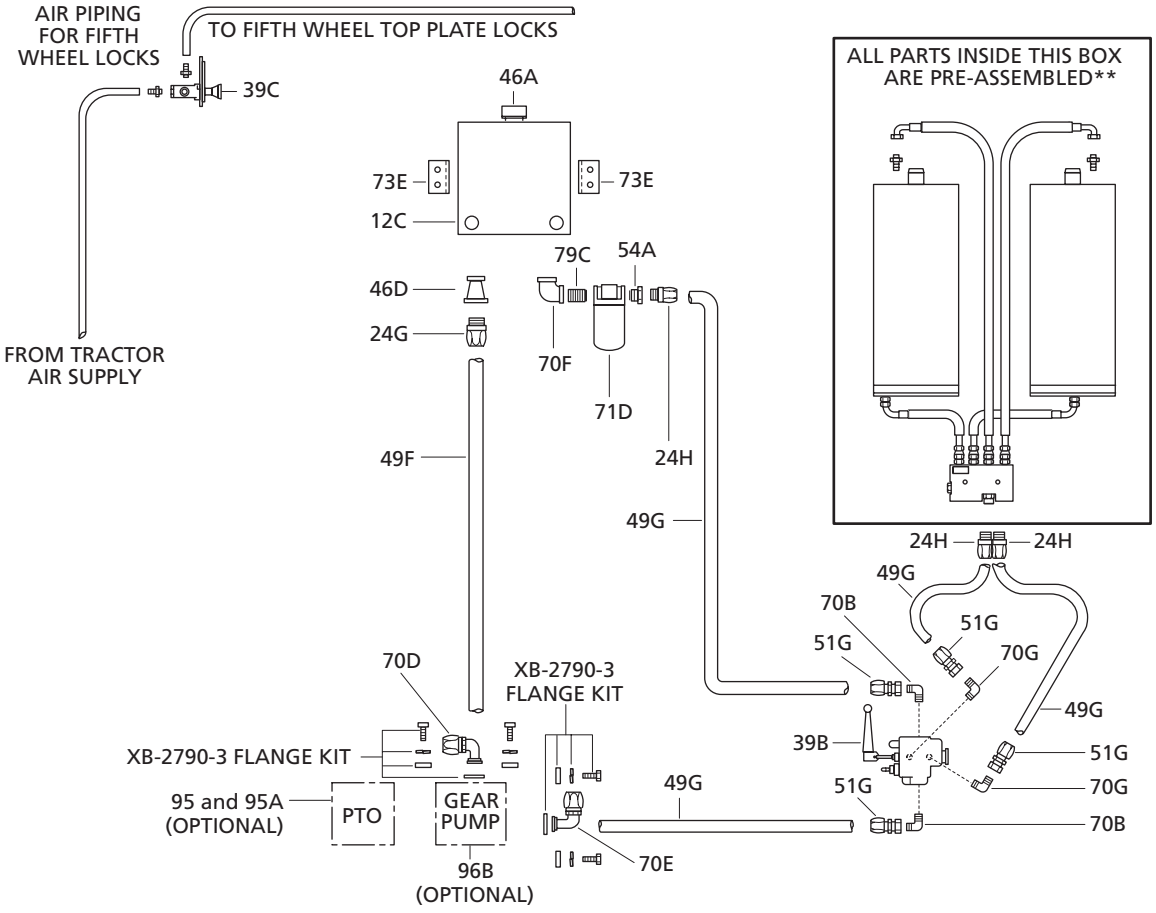

ITEM	DESCRIPTION	PART NUMBER	QTY.	WEIGHT LBS [KG]
12C*	Oil Tank	XB-01730	1	35.00 [15.88]
24G	Straight Male Hose Fitting, 1-1/2" NPT, 1-3/8" I.D. Hose	XB-0257	1	1.33 [0.60]
24H	Straight Male Hose Fitting, 3/4" NPT, 3/4" I.D. Hose	XB-2794-2	3	0.81 [0.37]
39B	Control Valve	XB-2782-1	1	15.15 [6.87]
39C	Fifth Wheel Lock Control Valve	XB-2556	1	0.36 [0.16]
46A*	Filler Cap and Breather	XB-01786	1	0.27 [0.12]
46D	Pipe Reducer, 1-1/2" NPT to 1-1/4" NPT	XB-01924	1	0.93 [0.42]
49F	1-3/8" I.D. Medium Pressure Oil Hose, 5-1/2" Ft.	XB-2786	1	9.44 [4.28]
49G	3/4" I.D. High Pressure Oil Hose	XB-2785-2	4	3.13 [1.42]
51G	37° Flare Fitting, 1-1/16"-12 JIC, 3/4" I.D. Hose	XB-0258-1	4	0.94 [0.43]
54A	Reducing Bushing, 1-1/4" x 3/4" NPT	XB-0181	1	0.39 [0.18]
70B	90° Elbow, 3/4"-14 NPT, 1-1/16"-12 JIC	XB-2934	2	0.45 [0.20]

ITEM	DESCRIPTION	PART NUMBER	QTY.	WEIGHT LBS [KG]
70D	90° Split Flange Fitting, 1-1/4" Flange, 1-3/8"I.D. Hose	XB-04479	1	1.42 [0.64]
70E	90° Split Flange Fitting, 1-1/4" Flange, 3/4" I.D. Hose	XB-04480-1	1	1.17 [0.53]
70F	90° Elbow, 1-1/4" NPT	XB-01788	1	1.09 [0.49]
70G	90° Male Elbow, 1/2"-14 NPT, 1-1/6"-12 JIC	XB-2933	2	0.44 [0.20]
71D	Oil Filter	XB-2783-A	1	3.70 [1.68]
73E*	Mounting Brackets	XA-01909	2	1.27 [0.58]
79C	Pipe Nipple, 1-1/4" NPT x 2" Long	XB-0255	1	0.26 [0.12]
95	Power Take-Off (Optional)	XB-2781-1	1	28.25 [12.81]
95A	Power Take-Off With Air Operated Shifter (Optional)	XB-2781-1-A	1	35.00 [15.88]
96B	Hydraulic Gear Pump (Optional), See RK-2800-41-G	XB-04477	1	36.00 [16.33]

* Items 46A, 73E and 12C are available individually or as XA-01911 tank assembly.
** See page 317

 Amendments and errors reserved. © SAF-HOLLAND, Inc.

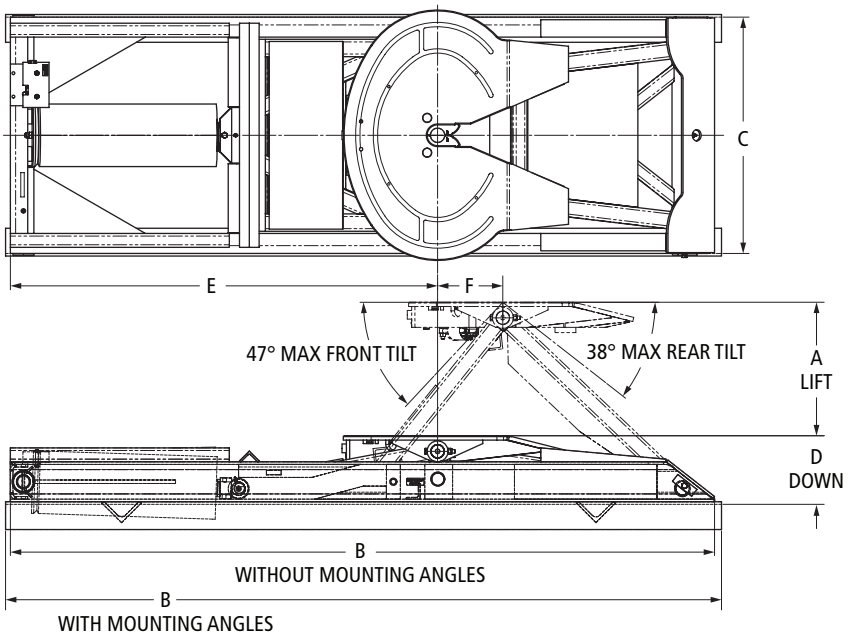

FW2800-X

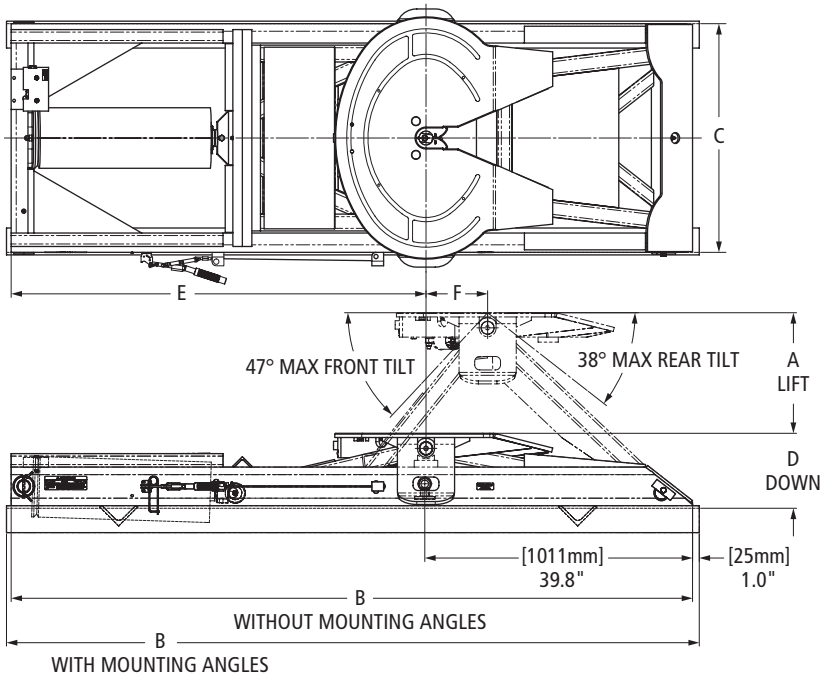

FW2800-X-87

DESCRIPTION	MODEL	A	LIFT CAPACITY	B		C	D	E	F	MINIMUM CAB-AXLE DIMENSION		APPROX. WEIGHT
		NOM. LIFT HEIGHT IN [MM]		LENGTH		BASE WIDTH	HEIGHT IN [MM] DOWN	FRAME FRONT	SWING LENGTH	96" WIDE	102" WIDE	
				WITH MOUNTING ANGLES	WITHOUT MOUNTING ANGLES							
Single Cylinder	FW2800-X	19.50" [495]	50,000 lbs.	103" [2616]	101.31" [2573]	34" [864]	9.75" [248]	61.5" [1562]	9.5" [241]	74.0" [1880]	77.0" [1956]	1,700 lbs.
Single Cylinder W/Lock Down	FW2800-X-87	18.13" [461]	50,000 lbs.	103" [2616]	101.31" [2573]	34" [864]	11.13" [283]	61.5" [1562]	9.31" [236]	74.0" [1880]	76.0"[1930]	1,753 lbs.

XL-FW10081PM-en-US Rev D 2016-03-01 Amendments and errors reserved. © SAF-HOLLAND, Inc.

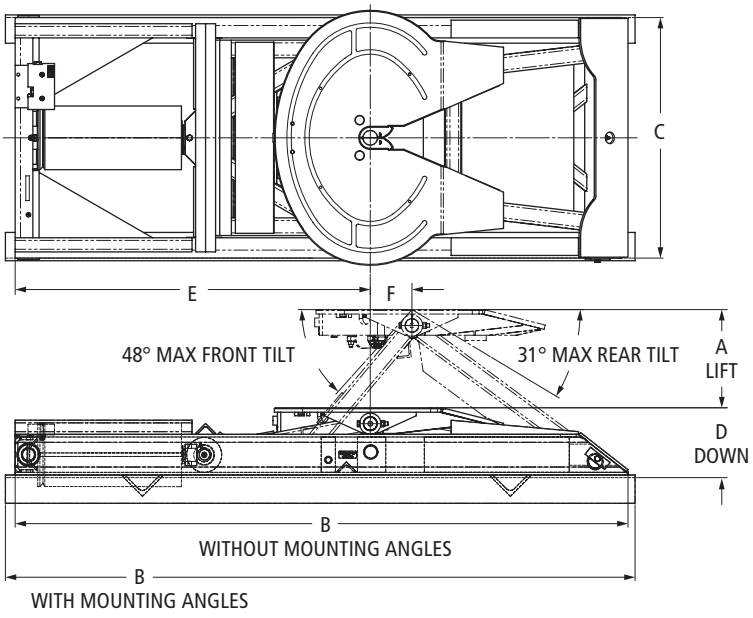

FW2900-X

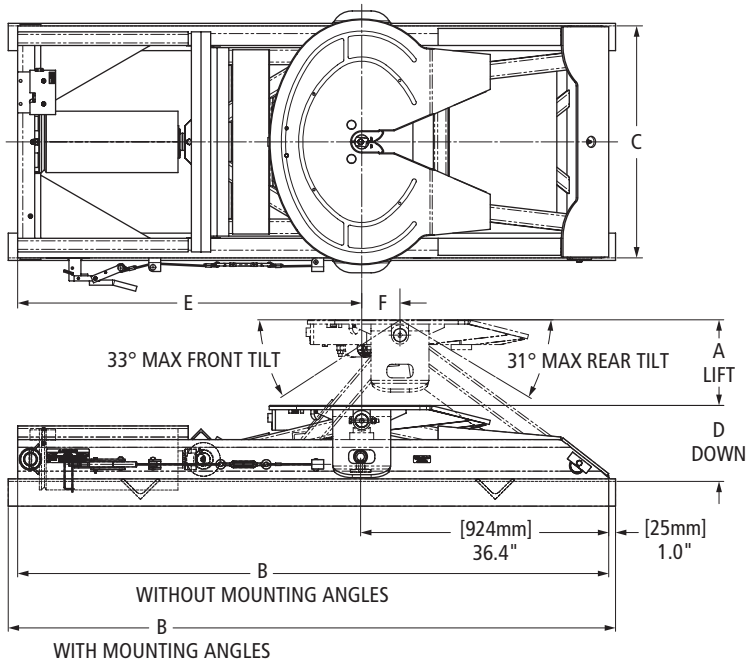

FW2900-X-87

DESCRIPTION	MODEL	A	LIFT CAPACITY	B		C	D	E	F	MINIMUM CAB-AXLE DIMENSION		APPROX. WEIGHT
		NOM. LIFT HEIGHT IN [MM]		LENGTH		BASE WIDTH	HEIGHT IN [MM] DOWN	FRAME FRONT	SWING LENGTH	96" WIDE	102" WIDE	
				WITH MOUNTING ANGLES	WITHOUT MOUNTING ANGLES							
Single Cylinder	FW2900-X	14.00" [356]	50,000 lbs.	89" [2261]	86.62" [2200]	34" [864]	9.8" [249]	50.2" [1275]	5.88" [149]	70.0" [1778]	73.0" [1854]	1,675 lbs.
Single Cylinder W/Lock Down	FW2900-X-87	12.50" [318]	50,000 lbs.	89" [2261]	86.62" [2200]	34" [864]	11.13" [283]	50.25" 1276]	5.56"[141]	70.0" [1778]	73.0" [1854]	1,590 lbs.

 Amendments and errors reserved. © SAF-HOLLAND, Inc.

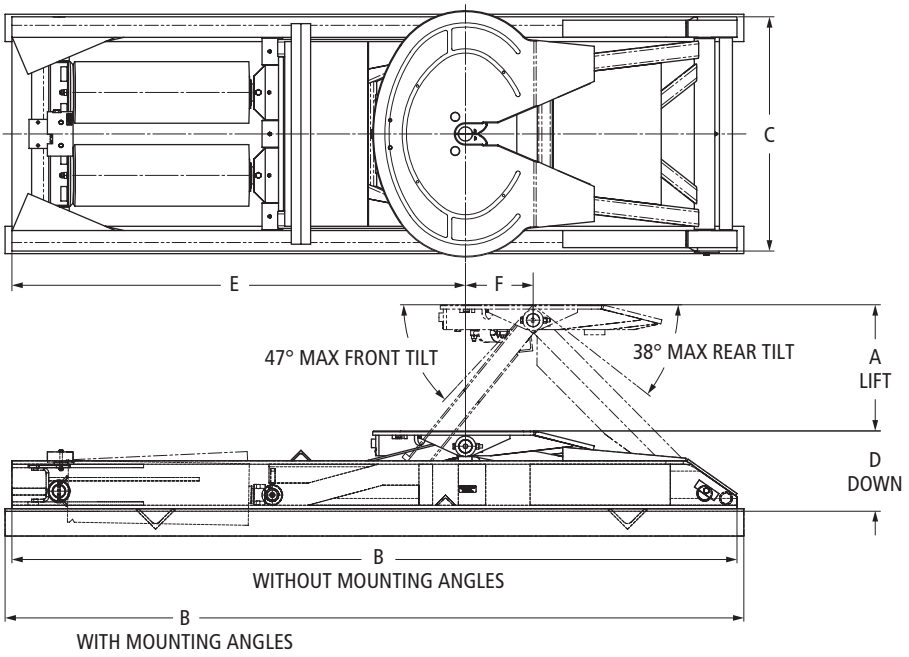

FW2800-5X

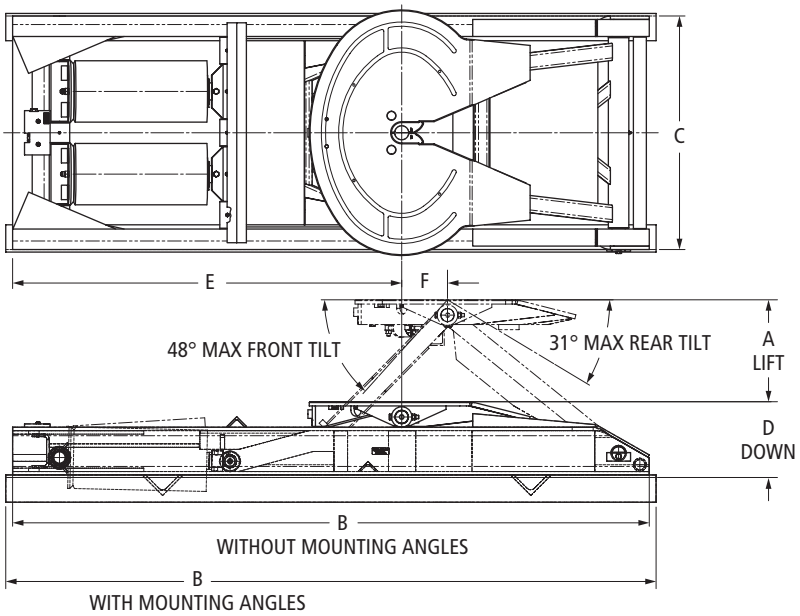

FW2900-5X

DESCRIPTION	MODEL	A	LIFT CAPACITY	B		C	D	E	F	MINIMUM CAB-AXLE DIMENSION		APPROX. WEIGHT
		NOM. LIFT HEIGHT IN [MM]		LENGTH		BASE WIDTH	HEIGHT IN [MM] DOWN	FRAME FRONT	SWING LENGTH	96" WIDE	102" WIDE	
				WITH MOUNTING ANGLES	WITHOUT MOUNTING ANGLES							
Twin Cylinder	FW2800-5X	18.50"	100,000 lbs.	108" [2743]	106.00" [2692]	34.25" [870]	11.69" [297]	66.31" [1684]	9.88" [251]	74.0" [1880]	77.0" [1956]	2,100 lbs.
Twin Cylinder	FW2900-5X	15.00"	100,000 lbs.	95.38" [2423]	93.38" [2372]	34.25" [870]	11.06" [281]	57.07" [1450]	6.75" [171]	71.0" [1803]	74.0" [1880]	2,050 lbs.

XL-FW10081PM-en-US Rev D 2016-03-01 Amendments and errors reserved. © SAF-HOLLAND, Inc.

THIS PAGE INTENTIONALLY LEFT BLANK

 Amendments and errors reserved. © SAF-HOLLAND, Inc.

RK-65021, RK-65021-2, RK-65021-4 & RK-65021-5
Complete Rebuild Kit (XA-2801-AX & XA-2801-AX-1)

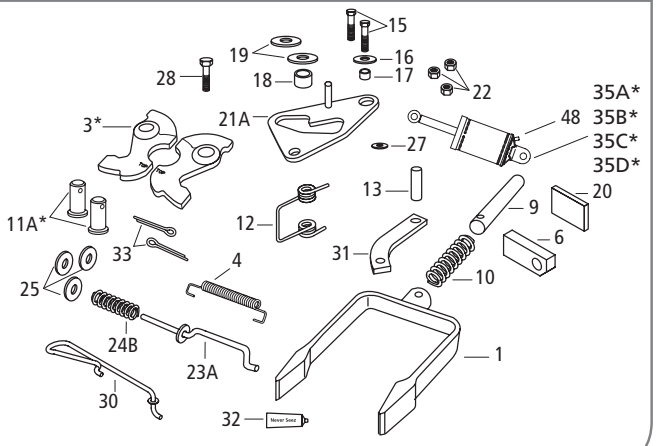

RK-65021-3
Complete Rebuild Kit (XA-2801-S0848-1)

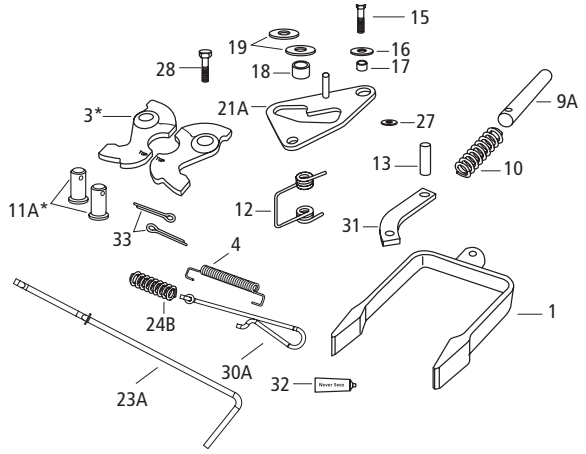

RK-2774
Kit, Rod Bearing (XA-2710-1, XA-2810-1)

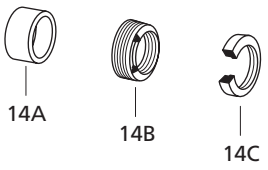

RK-63504
Lock Kit

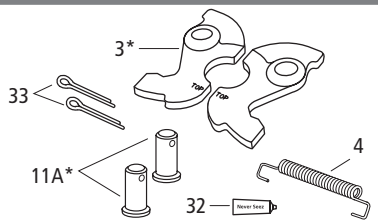

ITEM	DESCRIPTION	PART NUMBER	QTY.	WEIGHT LBS [KG]
1	Yoke	XA-07295-THK	1	5.87 [2.66]
3*	Lock Jaw Set	XA-1704-X	1	7.20 [3.27]
4	Spring, Extension	XB-GT-13-1	1	0.07 [0.03]
6	Support, Cylinder	XA-2836	1	0.31 [0.14]
9	Shaft, Yoke	XA-1706-1	1	0.83 [0.38]
9A	Shaft, Yolk, Manual Release	XA-S0849	1	0.98 [0.45]
10	Spring, Compression	XB-1505	1	0.61 [0.28]
11A*	Pin, Lock	XA-1313	2	1.13 [0.51]
12	Spring, Torsion	XB-2149	1	0.06 [0.03]
13	Pin, Spring, .50" Diameter x 2.75" Long	XB-21-S-500-2750	1	0.02 [0.01]
15	HHCS, .50"-20 x 1.75" Gr 5 Zinc Plate, Nylock	XB-2083	2	0.13 [0.06]
16	Washer, .56" I.D. x 1.75" O.D.	XB-10267	1	0.12 [0.05]
17	Roller, .52" I.D. x 1" O.D. x .38" Long	XA-1029	1	0.06 [0.03]
18	Roller, .66" I.D. x 1" O.D. x .38" Long	XA-1507-1	1	0.05 [0.02]
18A	Roller, .66" I.D. x 1" O.D. x .38" Long - Manual Release	XA-1507	1	0.05 [0.02]
19	Washer, .66" I.D. x 2.25" O.D.	XB-1030-1	2	0.19 [0.09]
20	Spacer	XA-2836-1	1	0.11 [0.05]
21	Plate S/A, Cam	XA-1705-11	1	1.86 [0.84]
21A	Plate S/A, Cam	XA-1705	1	1.75 [0.79]
22	Lock Nut, .50"-20 Gr C, Cam Plates, Bracket Pins, Air Release	XB-T-69-A	3	0.04 [0.02]
23	Release Handle, Air Release	XA-1707-16	1	1.00 [0.45]
23A	Release Handle, Manual Release	XA-S02087	1	1.69 [0.77]

ITEM	DESCRIPTION	PART NUMBER	QTY.	WEIGHT LBS [KG]
24B	Spring, Manual Release	XB-1028-1	1	0.10 [0.04]
25	Washer, .53" I.D. x 1.06" O.D.	XB-PW-1732-1-116	3	0.02 [0.01]
27	Washer, .56" I.D. x 1.38" O.D., Manual Release Washer, .56" I.D. x 1.38" O.D., Air Release	XB-T-49	1	0.04 [0.02]
28	HHCS, .63"-18 x 1.75" Gr 8	XB-CX-58-F-134	1	0.21 [0.10]
30	Release Handle	XA-3544-1-A	1	0.22 [0.10]
30A	Release Handle, Manual Release	XA-S02089-1-A	1	0.22 [0.10]
31	Bar, Lock	XA-3528	1	0.61 [0.28]
32	Never-Seez, 7.5g Tube	XB-02967	1	N/A
33	Pin, Cotter, .25" Diameter x 2" Long	XB-5	2	0.05 [0.02]
35A*	Air Cylinder (XA-2801-AX-1)	XA-11694	1	4.15 [1.88]
35B*	Air Cylinder (XA-2801-AX-1)	XA-2524-03185-1	1	4.60 [2.09]
35C*	Air Cylinder (XA-2801-AX)	XA-11712	1	3.91 [1.77]
35D*	Air Cylinder (XA-2801-AX)	XA-2524-R-13-X	1	3.80 [1.72]
48	Elbow, 90° Street	XB-01996	1	0.09 [0.04]

*Not sold individually - must be purchased in a kit.

XL-FW10081PM-en-US Rev D 2016-03-01 Amendments and errors reserved. © SAF-HOLLAND, Inc.

RK-2800-20-G
Kit, Hose & Fitting

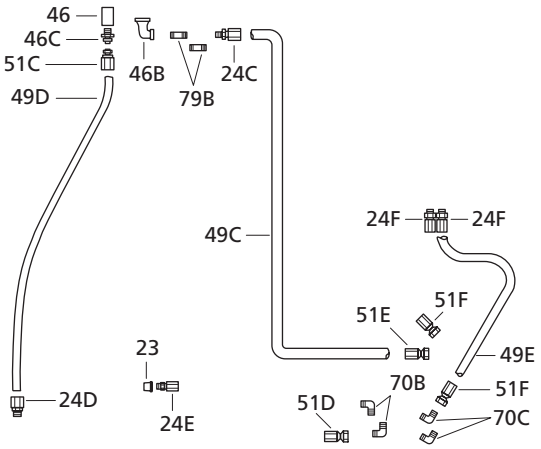

RK-2800-30-G
Kit, Hose & Fitting (2 CYL HYD 5TH WHLS)

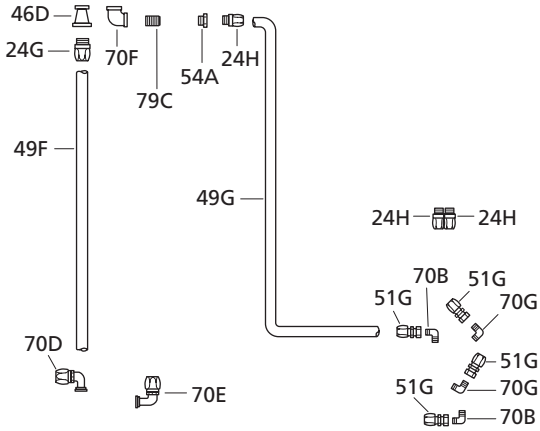

RK-2800-11-G
Kit, Accessory, Gear Pump & Control Valve

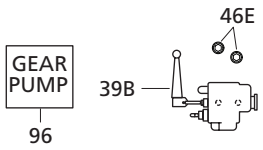

RK-2800-41-G
Kit, Accessory (2 CYL HYD ELE 5TH WHLS)

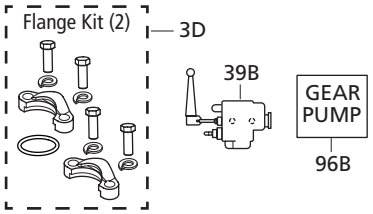

XA-01911
Tank Assembly, Oil 10.2 GAL

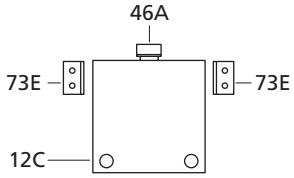

ITEM	DESCRIPTION	PART NUMBER	QTY.	WEIGHT LBS [KG]
3D	Flange Kit, 1-1/4"	XB-2790-3	2	0.42 [0.19]
12C	Tank, Oil 10.2 Gal	XB-01730	1	35.00 [15.88]
23	Bushing Reducer	XB-04478	1	0.35 [0.16]
24C	Fitting, Straight Male Hose	XB-2793	1	0.43 [0.20]
24D	Fitting, Straight Male Hose	XB-2794-1	1	0.85 [0.39]
24E	Fitting, Straight Male Hose	XB-2791	1	0.34 [0.15]
24F	Fitting, Straight Male Hose	XB-2792	2	0.40 [0.18]
24G	Fitting, Straight Male Hose	XB-0257	1	1.33 [0.60]
24H	Fitting, Straight Male Hose	XB-2794-2	3	0.81 [0.37]
39B	Valve, Hydraulic Control	XB-2782-1	1	15.15 [6.87]
46	1-1/4" Pipe Coupler	XB-02208	1	0.69 [0.31]
46A	Cap, Filler & Breather	XB-01786	1	0.27 [0.12]
46B	90 Deg Reducing El	XB-02209	1	0.73 [0.33]
46C	Male Pipe Adapter	XB-2790	1	0.74 [0.34]
46D	Coupling, Pipe Reducing	XB-01924	1	0.93 [0.42]
46E	Plug, 1" NPTF	XB-05501	2	0.21 [0.10]
49C	Hose, Med Pressure Hydraulic	XB-2785	1	2.21 [1.00]
49D	Hose, Med Pressure Hydraulic	XB-2786-1	1	11.67 [5.29]
49E	Hose, Med Pressure Hydraulic	XB-2784	1	3.19 [1.44]

ITEM	DESCRIPTION	PART NUMBER	QTY.	WEIGHT LBS [KG]
49F	Hose, Med Pressure Hydraulic	XB-2786	1	9.44 [4.28]
49G	Hose, High Pressure Hydraulic	XB-2785-2	1	3.13 [1.42]
51C	Fitting, SAE 37 Deg (JIC) Swivel	XB-2795	1	1.19 [0.54]
51D	Fitting, SAE 37 Deg (JIC) Swivel	XB-2937	1	0.52 [0.23]
51E	Fitting, SAE 37 Deg (JIC) Swivel	XB-2932	1	0.47 [0.21]
51F	Fitting, SAE 37 Deg (JIC) Swivel	XB-2938	2	0.35 [0.16]
51G	Fitting, 37 Degree Swivel	XB-0258-1	4	0.94 [0.43]
54A	Bushing, Pipe 1-1/4" x 3/4"	XB-0181	1	0.39 [0.18]
70B	Connector 90 Degree Male Elbow	XB-2934	2	0.45 [0.20]
70C	90 Degree Male Elbow	XB-2939	2	0.31 [0.14]
70D	Fitting, 90 Degree Split Flange	XB-04479	1	1.42 [0.64]
70E	Fitting, 90 Degree Split Flange	XB-04480-1	1	1.17 [0.53]
70F	Elbow, 90 Degree 1-1/4	XB-01788	1	1.09 [0.49]
70G	Connector 90 Degree Male Elbow	XB-2933	2	0.44 [0.20]
73E	Bracket, Mtg.	XA-01909	2	1.27 [0.58]
79B	Nipple 3/4" Pipe X 2"	XB-2798-1	2	0.15 [0.07]
79C	Nipple, Pipe	XB-0255	1	0.26 [0.12]
96	Pump, Hydraulic Gear (Optional)	XB-04476	1	32.15 [14.58]
96B	Pump, Hydraulic Gear (Optional)	XB-04477	1	36.00 [16.33]

 Amendments and errors reserved. © SAF-HOLLAND, Inc.

FW35-03344, XA-351-03505 & XA-351-UB Exploded View

SAF-HOLLAND Group

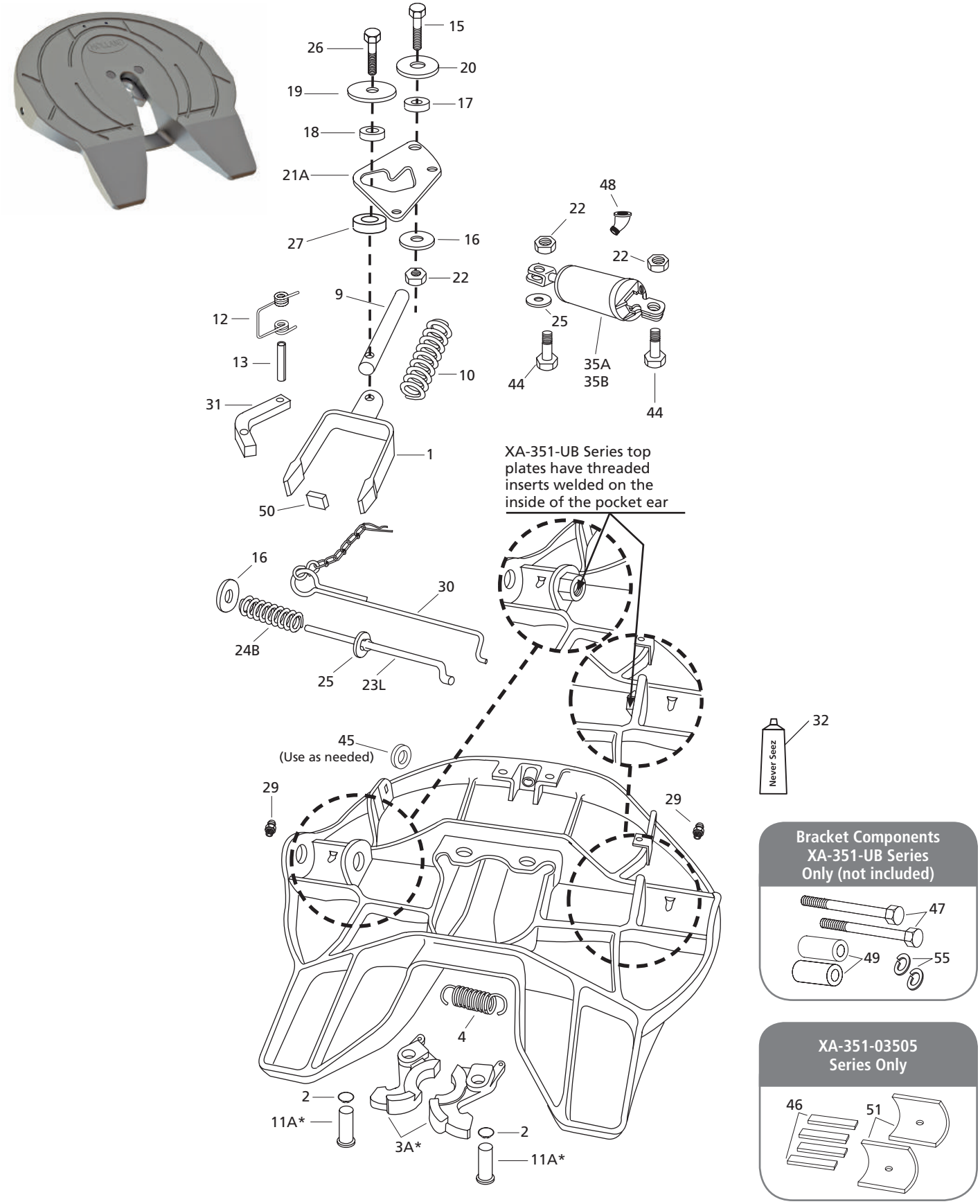

XL-FW10081PM-en-US Rev D 2016-03-01 Amendments and errors reserved. © SAF-HOLLAND, Inc.

ITEM	DESCRIPTION	PART NUMBER	QTY.	WEIGHT LBS [KG]
1	Yoke	XA-07295	1	5.82 [2.64]
2	Retaining Ring, 1" Diameter	XB-07398	2	0.01 [0.005]
3A*	Lock Set, See RK-351-08332-1	XA-08332-1	1	7.69 [3.49]
4	Spring, Extension	XB-07628	1	0.08 [0.04]
9	Shaft, Yoke	XA-1706-1	1	0.83 [0.38]
10	Spring, Compression	XB-1505	1	0.61 [0.28]
11A*	Pin, Lock, See RK-07292-1	XA-07292-1	2	1.08 [0.49]
12	Spring, Torsion	XB-2149	1	0.06 [0.03]
13	Pin, Spring, .50" Diameter x 2.75" Long	XB-21-S-500-2750	1	0.02 [0.01]
15	HHCS, .50"-20 x 1.75" Gr 5 Zinc Plate, Nylock	XB-2083	1	0.13 [0.06]
16	Washer, .56" I.D. x 1.75" O.D.	XB-08559	2	0.06 [0.03]
17	Roller, .52" I.D. x 1" O.D. x .38" Long	XA-1029	1	0.06 [0.03]
18	Roller, .66" I.D. x 1" O.D. x .38" Long	XA-1507-1	1	0.05 [0.02]
19	Washer, .66" I.D. x 2.63" O.D.	XB-07431	1	0.24 [0.11]
20	Washer, .50" I.D. x 2.25" O.D.	XB-1030	1	0.20 [0.09]
21A	Plate, Cam	XA-08988	1	2.26 [1.03]
22	Lock Nut, .50"-20 Gr C, Cam Plates, Bracket Pins, Air Release	XB-T-69-A	3	0.04 [0.02]
23L	Release Handle	XA-09041	1	1.00 [0.45]
24B	Spring, Manual Release	XB-07291	1	0.20 [0.09]
25	Washer, .53" I.D. x 1.06" O.D.	XB-PW-1732-1-116	2	0.02 [0.01]
26	HHCS, .63"-18 x 2" Long Gr. 8	XB-10035	1	0.25 [0.11]
27	Spacer, Cam	XA-09040	1	0.54 [0.24]
29	Fittings, Grease	XB-H-38	2	0.01 [0.005]
30	Handle, Secondary Lock Release	XA-3546	1	0.32 [0.15]
31	Bar, Lock	XA-3528	1	0.61 [0.28]
32	Never-Seez, 7.5g Tube	XB-02967	1	N/A
35A	Cylinder Assembly, Air, Stainless Steel	XA-2524-R-13-1	1	4.43 [2.01]
35B	Cylinder Assembly, Air, Stainless Steel	XA-2524-R-13-4	1	4.41 [2.00]
44	HHCS, .50"-20 X 1.75" Long Gr. 8	XB-T-89-5	2	0.14 [0.06]
45	Guide, Handle	XA-09039	1	0.11 [0.05]
46	Block, Bearing Stop	XA-0268	4	0.14 [0.06]
47	HHCS, 1.13"-7 x 7" Long Gr. 5	XB-BR-118-C-7	2	2.41 [1.09]
48	Elbow, 45° Street	XB-698	1	0.06 [0.03]
49	Bushing, Rubber	XB-1604-5	2	0.73 [0.33]
50	Stop, Yoke	XA-09043	1	0.05 [0.02]
51	Bearing, Bracket	XA-03423	2	1.45 [0.66]
55	Washer, Lock 1.13" I.D. x 1.84" O.D.	XB-E-536	2	0.12 [0.05]

*Not sold individually - must be purchased in kit.

REPLACEMENT TOP PLATE PART NUMBERS	
PART NUMBER	DESCRIPTION
XA-351-03505-P	Air Release W/Pins
XA-351-03505-2-P	Air Release W/Pins
XA-351-03505-3-P	Air Release W/Pins
XA-351-03505-4-P	Air Release W/Pins
XA-351-UB-P	Air Release W/Pins

AIR CYLINDER TABLE	
TOP PLATE ASSEMBLY	AIR CYLINDER COMPONENTS
XA-351-03505	Items 48 and 35A
XA-351-03505-2	Items 48 and 35A
XA-351-03505-3	Item 35B, omit item 48
XA-351-03505-4	Items 48 and 35B
XA-351-UB	Items 48 and 35A

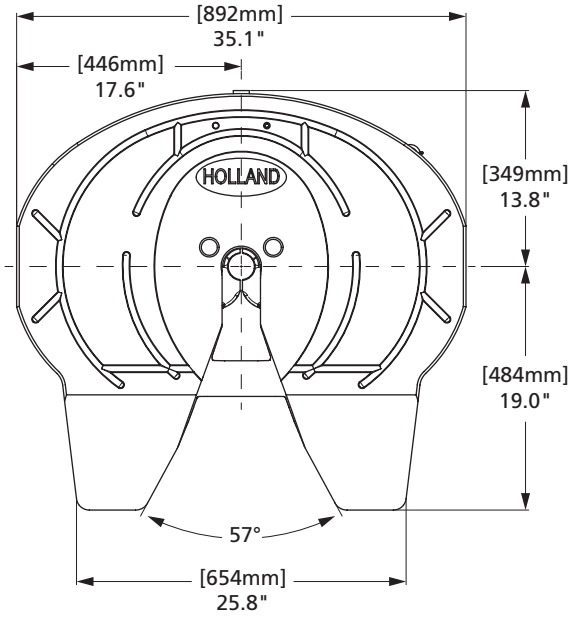

 Amendments and errors reserved. © SAF-HOLLAND, Inc.

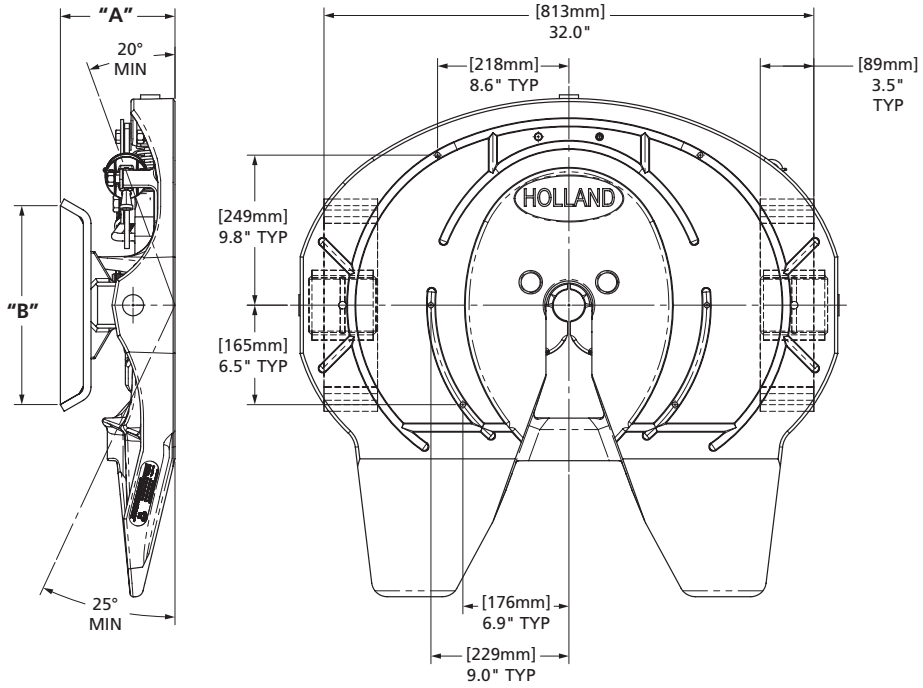

PART NUMBER	DIM "A" [mm]	DIM "B" [mm]	WEIGHT LBS [KG]
FW35-03344-10	10.0" [254]	13.0" [330]	325.00 [147.42]
FW35-03344-9	7.5" [190]	13.0" [330]	306.00 [138.80]
FW35-03344-8	8.5" [216]	11.3" [286]	308.00 [139.71]
FW35-03344-7	8.5" [216]	11.3" [286]	308.00 [139.71]
FW35-03344-6	7.5" [190]	13.0" [330]	306.00 [138.80]
FW35-03344-5	7.5" [190]	13.0" [330]	306.00 [138.80]
FW35-03344-4	7.5" [190]	13.0" [330]	306.00 [138.80]
FW35-03344-3	10.0" [254]	13.0" [330]	325.00 [147.42]
FW35-03344-2	7.5" [190]	13.0" [330]	306.00 [138.80]
FW35-03344-1	10.0" [254]	13.0" [330]	325.00 [147.42]
FW35-03344	7.5" [190]	13.0" [330]	306.00 [138.80]

XL-FW10081PM-en-US Rev D 2016-03-01 Amendments and errors reserved. © SAF-HOLLAND, Inc.

RK-09063
Complete Rebuild (Release Components)

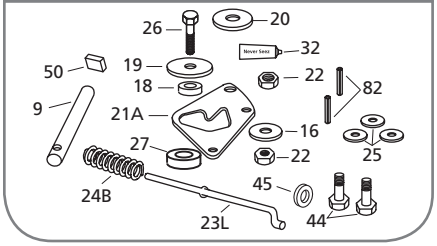

RK-04413-1
Kit, Cushion & Pin

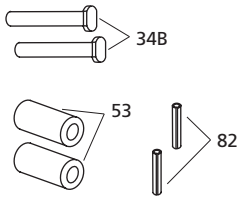

RK-351-08332-1
Kit, Lock & Pins (XA-351-03505 Series)

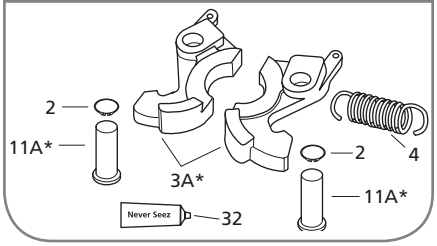

RK-351-03505
Complete Rebuild (XA-351-03505/-2)

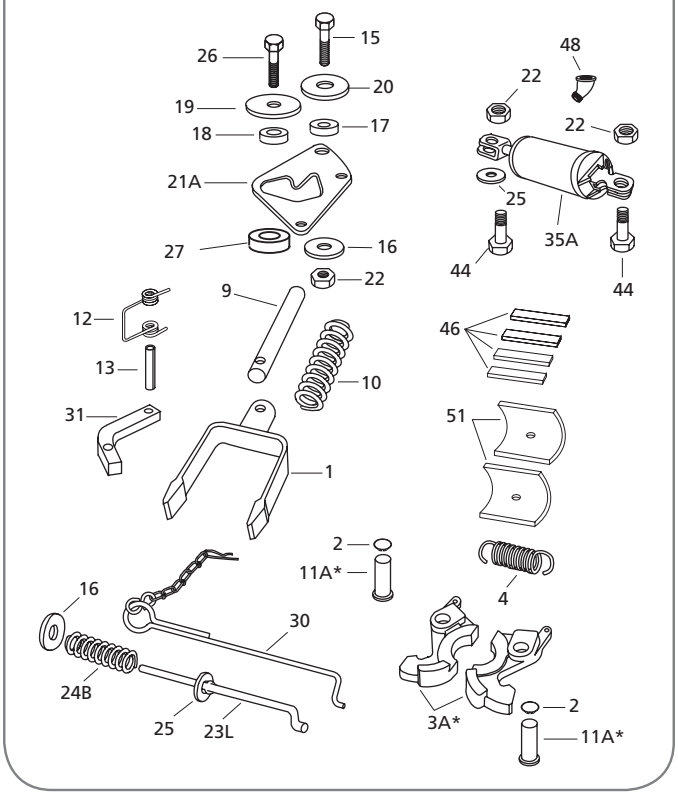

ITEM	DESCRIPTION	PART NUMBER	QTY.	WEIGHT LBS [KG]
1	Yoke	XA-07295	1	5.82 [2.64]
2	Retaining Ring, 1" Diameter	XB-07398	2	0.01 [0.005]
3A*	Lock Set	XA-08332-1	1	7.69 [3.49]
4	Spring, Extension	XB-07628	1	0.08 [0.04]
9	Shaft, Yoke	XA-1706-1	1	0.83 [0.38]
10	Spring, Compression	XB-1505	1	0.61 [0.28]
11A*	Pin, Lock	XA-07292-1	2	1.08 [0.49]
12	Spring, Torsion	XB-2149	1	0.06 [0.03]
13	Pin, Spring, .50" Diameter x 2.75" Long	XB-21-S-500-2750	1	0.02 [0.01]

ITEM	DESCRIPTION	PART NUMBER	QTY.	WEIGHT LBS [KG]
15	HHCS, .50"-20 x 1.75" Gr 5 Zinc Plate, Nylock	XB-2083	1	0.13 [0.06]
16	Washer, .56" I.D. x 1.75" O.D. (RK-09063)	XB-08559	1	0.06 [0.03]
	Washer, .56" I.D. x 1.75" O.D		2	0.06 [0.03]
17	Roller, .52" I.D. x 1" O.D. x .38" Long	XA-1029	1	0.06 [0.03]
18	Roller, .66" I.D. x 1" O.D. x .38" Long	XA-1507-1	1	0.05 [0.02]
19	Washer, .66" I.D. x 2.63" O.D.	XB-07431	1	0.24 [0.11]
20	Washer, .50" I.D. x 2.25" O.D.	XB-1030	1	0.20 [0.09]
21A	Plate, Cam	XA-08988	1	2.26 [1.03]
22	Lock Nut, .50"-20 Gr C, Cam Plates, Bracket Pins , Air Release	XB-T-69-A	2	0.04 [0.02]
	Lock Nut, .50"-20 Gr C, Cam Plates, Bracket Pins , Air Release		3	0.04 [0.02]
23L	Release Handle	XA-09041	1	1.00 [0.45]
24B	Spring, Manual Release	XB-07291	1	0.20 [0.09]
25	Washer, .53" I.D. x 1.06" O.D.	XB-PW-1732-1-116	3	0.02 [0.01]
	Washer, .53" I.D. x 1.06" O.D. (RK-351-03505)		2	0.02 [0.01]
26	HHCS, .63"-18 x 2" Long Gr. 8	XB-10035	1	0.25 [0.11]
27	Spacer, Cam	XA-09040	1	0.54 [0.24]
30	Handle, Secondary Lock Release	XA-3546	1	0.32 [0.15]
31	Bar, Lock	XA-3528	1	0.61 [0.28]
32	Never-Seez, 7.5g Tube	XB-02967	1	N/A
34B	Pin, Bracket	XA-2016	2	2.00 [0.91]
35A	Cylinder Assembly, Air, Stainless Steel	XA-2524-R-13-1	1	4.43 [2.01]
44	HHCS, .50"-20 X 1.75" Long Gr. 8	XB-T-89-5	2	0.14 [0.06]
45	Guide, Handle	XA-09039	1	0.11 [0.05]
46	Block, Bearing Stop	XA-0268	4	0.14 [0.06]
48	Elbow, 45° Street	XB-698	1	0.06 [0.03]
50	Stop, Yoke	XA-09043	1	0.05 [0.02]
51	Bearing, Bracket	XA-03423	2	1.45 [0.66]
53	Bushing, Rubber	XB-0011	2	0.37 [0.17]
82	Pin, Spring, .38" Diameter x 1.75" Long	XB-21-S-375-1750	2	0.02 [0.01]

*Not sold individually - must be purchased in a kit.

 Amendments and errors reserved. © SAF-HOLLAND, Inc.

SAF-HOLLAND Group

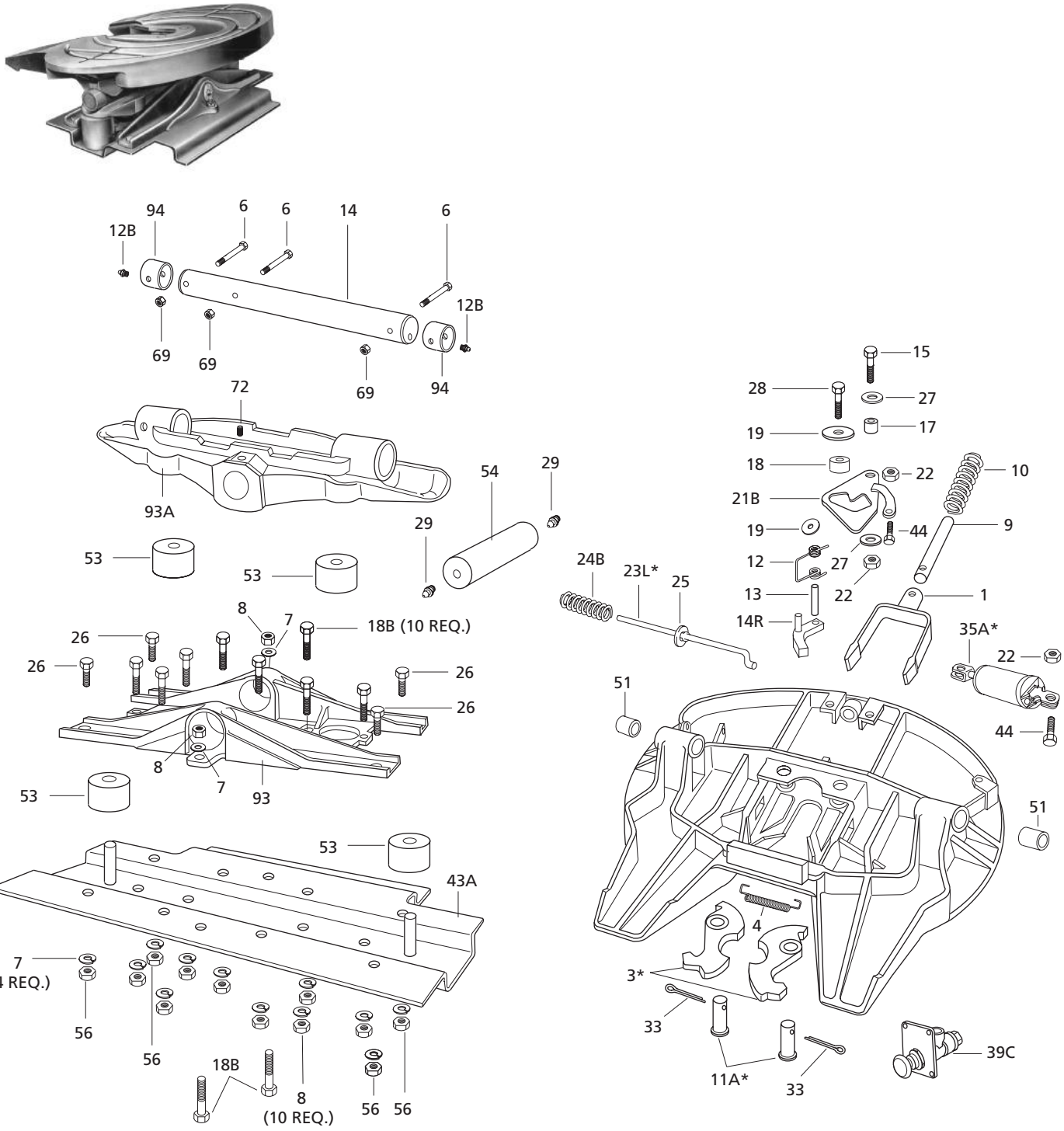

DISCONTINUED MODEL SERVICE PARTS ONLY
Please contact Customer Service for part availability
888.396.6501

XL-FW10081PM-en-US Rev D 2016-03-01 Amendments and errors reserved. © SAF-HOLLAND, Inc.

ITEM	DESCRIPTION	PART NUMBER	QTY.	WEIGHT LBS [KG]
1	Yoke	XA-07295-THK	1	5.87 [2.66]
3*	Lock Jaw Set, See RK-63504	XA-1704-X	1	7.20 [3.27]
4	Spring, Extension	XB-GT-13-1	1	0.07 [0.03]
6	HHCS, 3/8"-16 x 3-1/2"	XB-03437	3	0.11 [0.05]
7	Washer, Lock .63" I.D x 1.07" O.D.	XB-T-99	14	0.03 [0.01]
8	Nut, Hex 5/8"-11	XB-1316	10	0.10 [0.04]
9	Shaft, Yoke	XA-1706-1	1	0.83 [0.38]
10	Spring, Compression	XB-1505	1	0.61 [0.28]
11A*	Pin, Lock	XA-1313	2	1.13 [0.51]
12	Spring, Torsion	XB-2149	1	0.06 [0.03]
12B	Fitting, Lube	XB-767	2	0.01 [0.005]
13	Pin, Spring, .50" Diameter x 2.75" Long	XB-21-S-500-2750	1	0.02 [0.01]
14	Shaft, Wheel	XA-64	1	25.41 [11.53]
14R	Lock, Manual Secondary, Right-Hand	XA-3542-R	1	0.67 [0.30]
15	HHCS, .50"-20 x 1.75" Gr 5 Zinc Plate, Nylock	XB-2083	1	0.13 [0.06]
17	Roller, .52" I.D. x 1" O.D. x .38" Long	XA-1029	1	0.06 [0.03]
18	Roller, .66" I.D. x 1" O.D. x .38" Long	XA-1507-1	1	0.05 [0.02]
18B	HHCS, 5/8"-11 x 2-1/2"	XB-T-97	10	0.27 [0.12]
19	Washer, .66" I.D. x 2.25" O.D.	XB-1030-1	2	0.19 [0.09]
21B	Plate S/A, Cam	XA-1705-7A	1	2.18 [0.99]
22	Lock Nut, .50"-20 Gr C, Cam Plates, Bracket Pins , Air Release	XB-T-69-A	3	0.04 [0.02]
23L*	Release Handle, Left-Hand, See RK-1707-5	XA-1707-5	1	0.89 [0.40]
24B	Spring, Manual Release	XB-1028-1	1	0.10 [0.04]
25	Washer, .53" I.D. x 1.06" O.D.	XB-PW-1732-1-116	1	0.02 [0.01]
26	HHCS, 5/8"-18 x 1-1/2"	XB-9	4	0.21 [0.10]
27	Washer, .56" I.D. x 1.38" O.D., Manual Release Washer, .56" I.D. x 1.38" O.D., Air Release	XB-T-49	2	0.04 [0.02]
28	HHCS, .63"-18 x 1.75" Gr 8	XB-CX-58-F-134	1	0.21 [0.10]
29	Fitting, Lube	XB-H-38	2	0.01 [0.005]
33	Pin, Cotter, .25" Diameter x 2" Long	XB-5	2	0.05 [0.02]
35A*	Cylinder, Air	XA-11706	1	4.30 [1.95]
39C	Valve, Air Control	XB-2556	1	0.36 [0.16]
43A	Plate S/A, MTG	XA-H-15-C-60	1	93.00 [42.18]
44	HHCS, .50"-20 X 1.75" Long Gr. 8	XB-T-89-5	2	0.14 [0.06]
51	Bearing	XB-03429	2	0.60 [0.27]
53	Cushion, Ruber	XB-70	4	2.04 [0.92]
54	Shaft, Rocker	XA-63-1	1	17.50 [7.94]
56	Nut, Hex 5/8"-18	XB-E-540	4	0.07 [0.03]
69	Lock Nut, .38"-16 GRB	XB-338	3	0.02 [0.01]
72	Set Screw, 5/8"-11	XB-2896	1	0.08 [0.04]
93	Bed S/A, Rocker	XA-61-A	1	64.00 [39.03]
93A	Rocker Arm	XA-62	1	63.00 [28.58]
94	Collar, Axle	XA-H-72-A	2	0.42 [0.19]

*Not sold individually - must be purchased in a kit.

REPLACEMENT TOP PLATE PART NUMBERS	
PART NUMBER	DESCRIPTION
XA-1501-BA1S	RH Manual Release
XA-1501-CA1S	Air Release

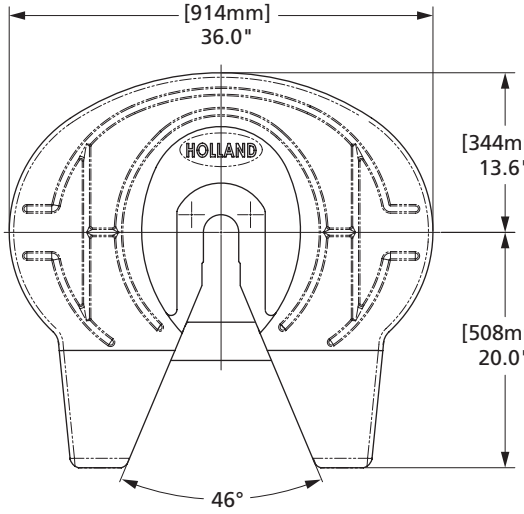

 Amendments and errors reserved. © SAF-HOLLAND, Inc.

SAF-HOLLAND Group

RK-65005
Kit, Complete Rebuild

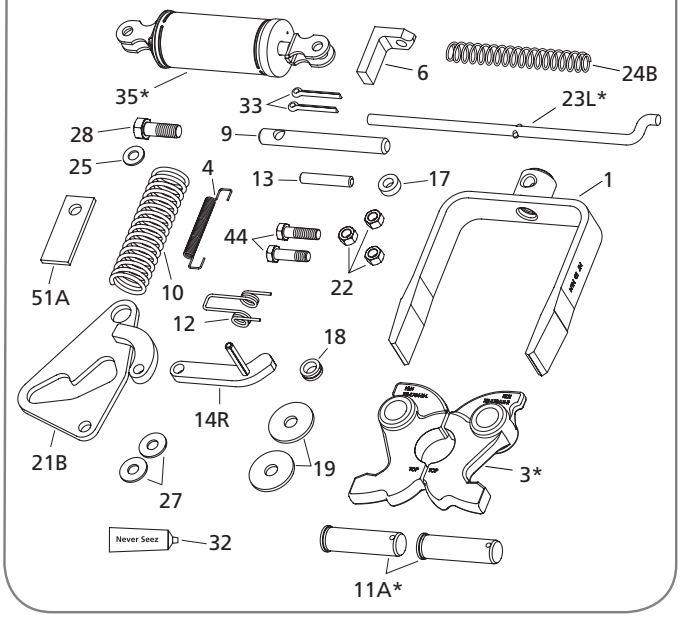

RK-1707-5
Kit, Release Handle

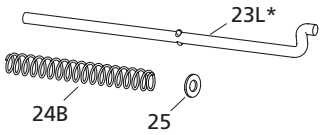

RK-63504
Lock Kit

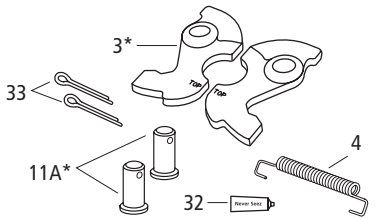

ITEM	DESCRIPTION	PART NUMBER	QTY.	WEIGHT LBS [KG]
1	Yoke	XA-07295-THK	1	5.87 [2.66]
3*	Lock Jaw Set, See RK-63504	XA-1704-X	1	7.20 [3.27]
4	Spring, Extension	XB-GT-13-1	1	0.07 [0.03]
6	Support, Cylinder	XA-1512	1	0.54 [0.24]
9	Shaft, Yoke	XA-1706-1	1	0.83 [0.38]
10	Spring, Compression	XB-1505	1	0.61 [0.28]
11A*	Pin, Lock	XA-1313	2	1.13 [0.51]
12	Spring, Torsion	XB-2149	1	0.06 [0.03]
13	Pin, Spring, .50" Diameter x 2.75" Long	XB-21-S-500-2750	1	0.02 [0.01]
14R	Lock, Manual Secondary, Right-Hand	XA-3542-R	1	0.67 [0.30]
17	Roller, .52" I.D. x 1" O.D. x .38" Long	XA-1029	1	0.06 [0.03]
18	Roller, .66" I.D. x 1" O.D. x .38" Long	XA-1507-1	1	0.05 [0.02]
19	Washer, .66" I.D. x 2.25" O.D.	XB-1030-1	2	0.19 [0.09]
21B	Plate S/A, Cam	XA-1705-7A	1	2.18 [0.99]
22	Lock Nut, .50"-20 Gr C, Cam Plates, Bracket Pins , Air Release	XB-T-69-A	3	0.04 [0.02]
23L*	Release Handle, Left-Hand, See RK-1707-5	XA-1707-5	1	0.89 [0.40]
24B	Spring, Manual Release	XB-1028-1	1	0.10 [0.04]
25	Washer, .53" I.D. x 1.06" O.D.	XB-PW-1732-1-116	1	0.02 [0.01]
27	Washer, .56" I.D. x 1.38" O.D., Manual Release Washer, .56" I.D. x 1.38" O.D., Air Release	XB-T-49	2	0.04 [0.02]
28	HHCS, .63"-18 x 1.75" Gr 8	XB-CX-58-F-134	1	0.21 [0.10]
32	Never-Seez, 7.5g Tube	XB-02967	1	N/A
33	Pin, Cotter, .25" Diameter x 2" Long	XB-5	2	0.05 [0.02]
35*	Air Cylinder Assembly	XA-2524-R-4-1	1	4.90 [2.22]
44	HHCS, .50"-20 X 1.75" Long Gr. 8	XB-T-89-5	2	0.14 [0.06]
51A	Bracket, Lever	XA-1532	1	0.38 [0.17]

*Not sold individually - must be purchased in a kit.

XL-FW10081PM-en-US Rev D 2016-03-01 Amendments and errors reserved. © SAF-HOLLAND, Inc.

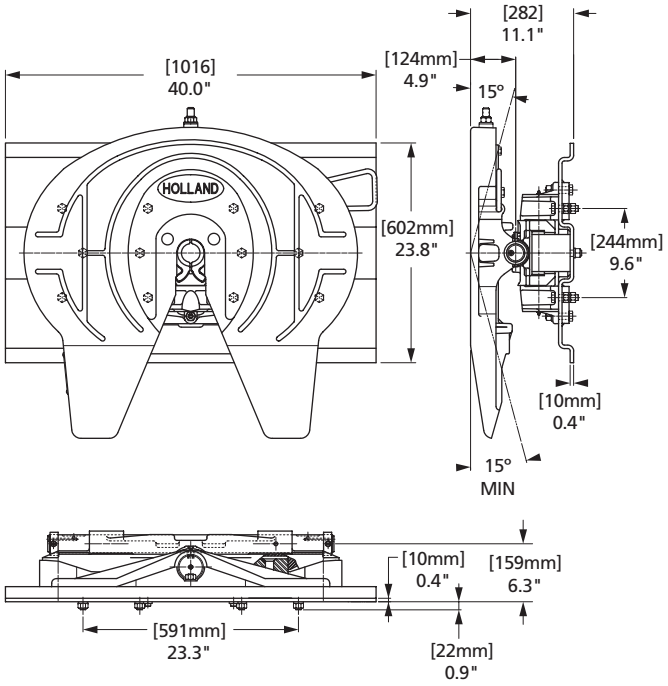

FW1560-B

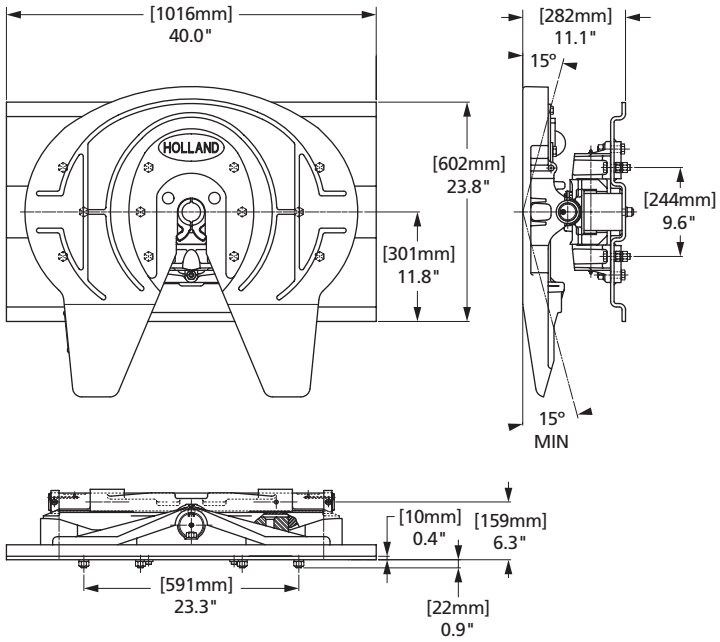

FW1560-BC

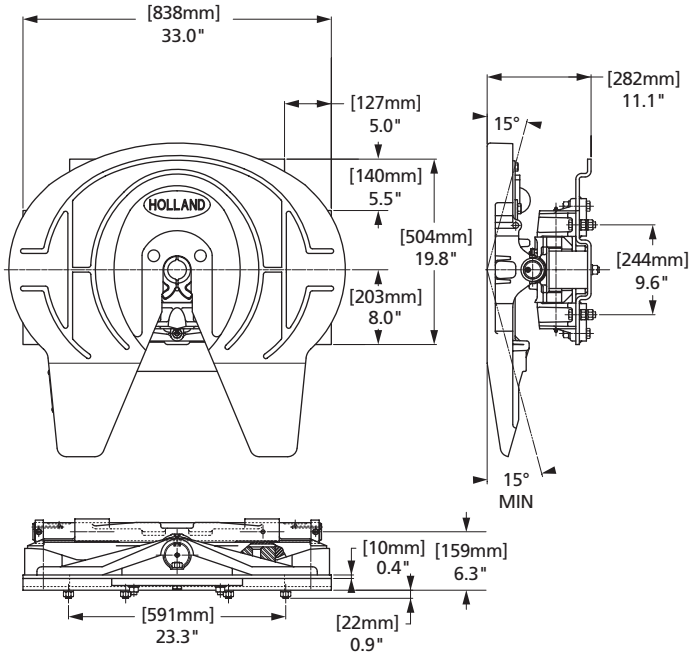

FW1560-C

 Amendments and errors reserved. © SAF-HOLLAND, Inc.

Simplex Yard Spotter (With and Without Lockout) Exploded View

SAF-HOLLAND Group

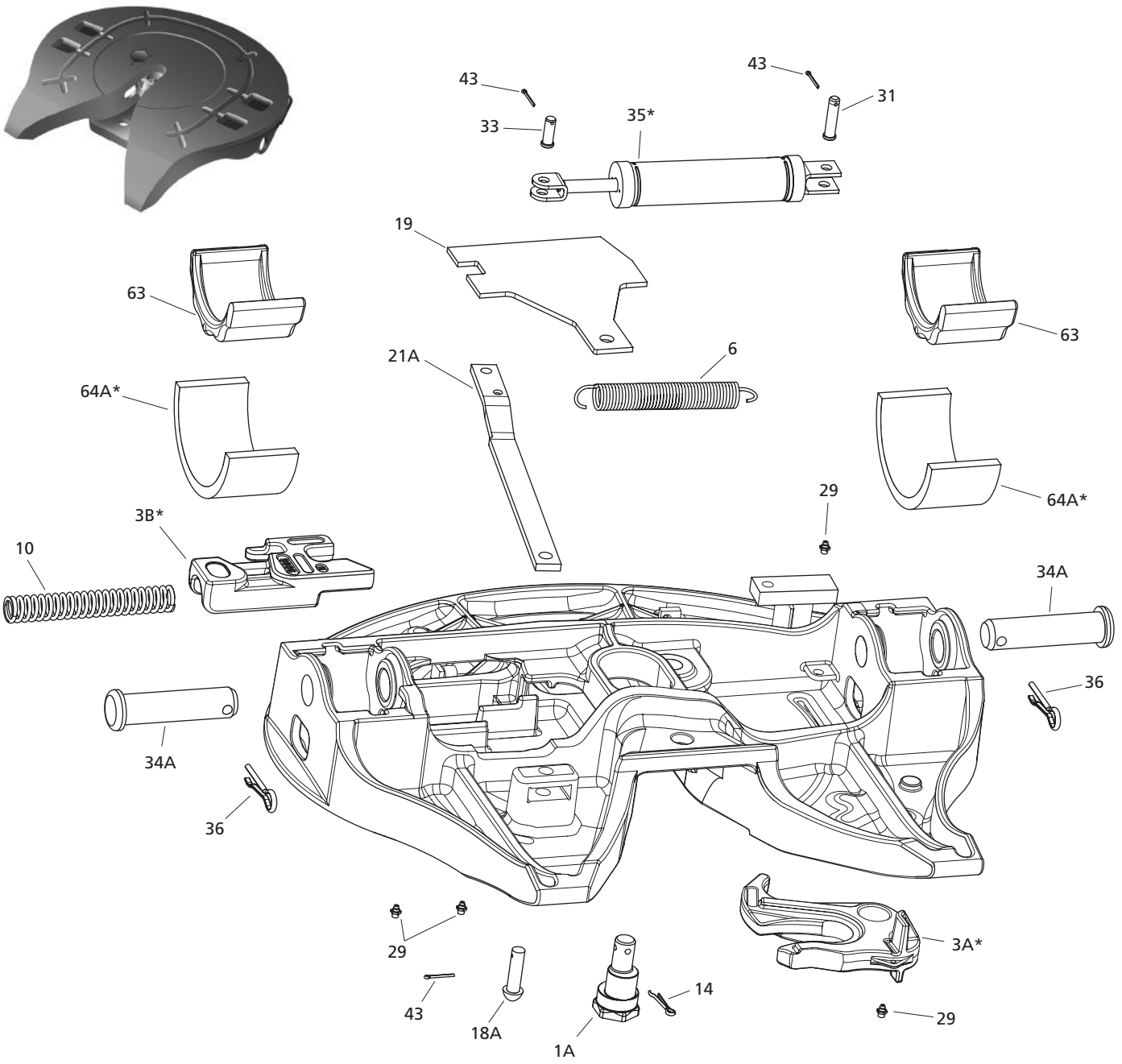

70



DISCONTINUED MODEL
SERVICE PARTS ONLY
Please contact Customer Service for part availability
888.396.6501

With Lockout

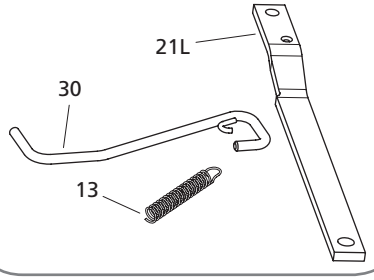

XL-FW10081PM-en-US Rev D 2016-03-01 Amendments and errors reserved. © SAF-HOLLAND, Inc.

Simplex Yard Spotter (With and Without Lockout) Parts List

ITEM	DESCRIPTION	PART NUMBER	QTY.	WEIGHT LBS [KG]
1A	Eccentric Jaw Pin	4109916	1	1.87 [0.85]
3A*	Lock Jaw, Right-Hand, See Kit 4000503 or 4000523	4109940	1	8.25 [3.74]
3B*	Lock, Right-Hand, See Kit 4000574	4109808	1	6.59 [2.99]
6	Spring, Extension	4100333	1	0.76 [0.34]
10	Spring, Lock	1200706	1	0.63 [0.29]
13	Spring, Extension, Lockout	4100212	1	0.04 [0.02]
14	Pin, Cotter, .19" Diameter x 1.25" Long	9900170	1	0.01 [0.005]
18A	Pin, Lever Bar	5400766	1	0.25 [0.11]
19	Plate, Cover	XA-10969	1	4.03 [1.83]
21A	Lever Bar	4100215	1	2.38 [1.08]
21L	Lever Bar, Lockout	4100211	1	2.36 [1.07]
29	Fittings, Grease	XB-H-38	4	0.01 [0.005]
30	Handle, Lockout Cylinder	4100206	1	0.51 [0.23]
31	Pin, Clevis, .50" Diameter X 2.00" Long	9900177	1	0.12 [0.06]
33	Pin, Clevis, .49" Diameter X 1.36" Long	5400219	1	0.08 [0.04]
34A	Pin, Bracket	5400705	2	3.25 [1.47]
35*	Cylinder Assembly, Air, See 4100304	XA-11664	1	4.21 [1.91]
36	Pin, Cotter, .38" Diameter x 1.50" Long	9900169	2	0.08 [0.04]
43	Pin, Cotter, .13" Diameter x 1.25" Long	84261	3	0.01 [0.005]
63	Shoe, Bracket	4109811	2	4.86 [2.20]
64A*	Insert, .58" Bracket, See 4000529 or 4000505	4100358	2	1.01 [0.46]
70	Decal, Warning	4100193	1	N/A

*Not sold individually - must be purchased in a kit.

REPLACEMENT TOP PLATE PART NUMBERS	
PART NUMBER	DESCRIPTION
4100129	Simplex Yard Spotter - No Lockout
4100219	Simplex Yard Spotter - With Lockout

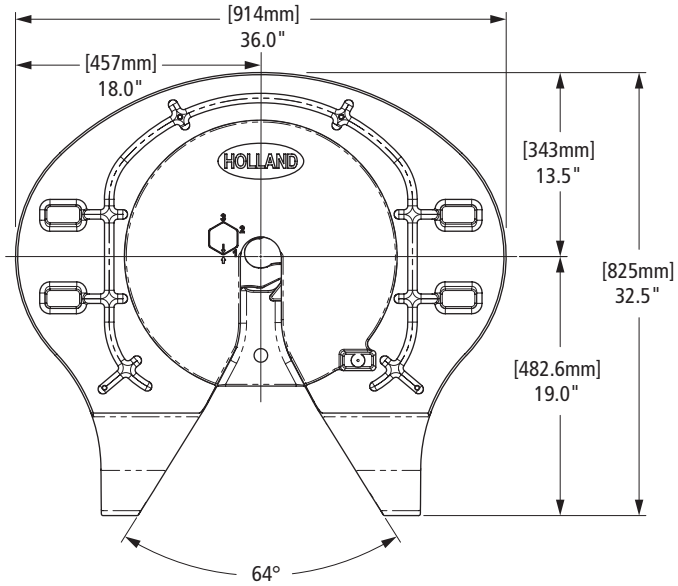

 Amendments and errors reserved. © SAF-HOLLAND, Inc.

SAF-HOLLAND Group

4000503
Kit, Jaw, RH, Pin Eccentric

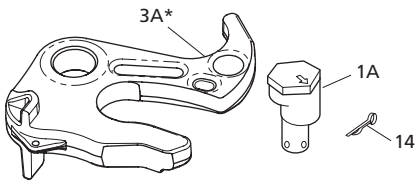

4000523
Kit, Jaw, RH, Pin Eccentric, Oversize

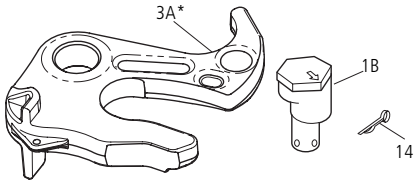

4000505
Bracket Connection Kit .578 SRH

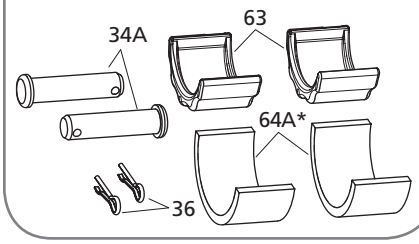

4000574
Simplex II Lock Kit (RH)

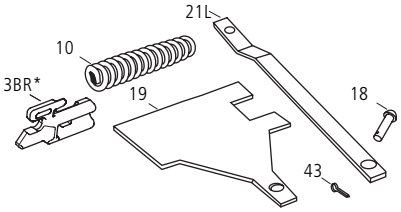

4100304
Air Cylinder Assembly

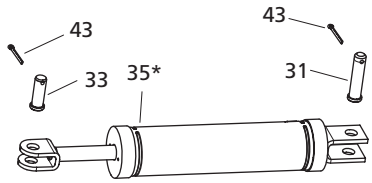

4000529
Kit Poly Pad .578 SRH

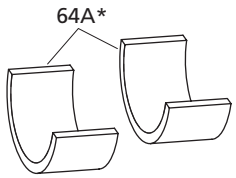

4000223
Repair Kit For Air Cylinder

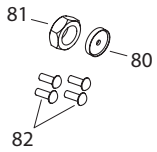

ITEM	DESCRIPTION	PART NUMBER	QTY.	WEIGHT LBS [KG]
1A	Eccentric Jaw Pin	4109916	1	1.87 [0.85]
1B	Eccentric Jaw Pin, Oversized	4109977	1	1.90 [0.86]
3A*	Lock Jaw, Right-Hand	4109940	1	8.25 [3.74]
3B*	Lock, Right-Hand	4109808	1	6.59 [2.99]
10	Spring, Lock	1200706	1	0.63 [0.29]
14	Pin, Cotter, .19" Diameter x 1.25" Long	9900170	1	0.01 [0.005]
18A	Pin, Lever Bar	5400766	1	0.25 [0.11]
19	Plate, Cover	XA-10969	1	4.03 [1.83]
21L	Lever Bar, Straight Pull	4100712	1	2.29 [1.04]
31	Pin, Clevis, .50" Diameter X 2.00" Long	9900177	1	0.12 [0.06]
33	Pin, Clevis, .49" Diameter X 1.36" Long	5400219	1	0.08 [0.04]

ITEM	DESCRIPTION	PART NUMBER	QTY.	WEIGHT LBS [KG]
34A	Pin, Bracket	5400705	2	3.25 [1.47]
35*	Cylinder Assembly, Air	XA-11664	1	4.21 [1.91]
36	Pin, Cotter, .38" Diameter x 1.50" Long	9900169	2	0.08 [0.04]
43	Pin, Cotter, .13" Diameter x 1.25" Long (4000574)	84261	1	0.01 [0.005]
	Pin, Cotter, .13" Diameter x 1.25" Long (4100304)		2	0.01 [0.005]
63	Shoe, Bracket	4109811	2	4.86 [2.20]
64A*	Insert, .58" Bracket	4100358	2	1.01 [0.46]
80	Seal, Air Cylinder Piston	4000224	1	0.00 [0.005]
81	Nut, Lock	4000225	1	0.00 [0.005]
82	Pin, Groove	4000226	4	0.00 [0.005]

*Not sold individually - must be purchased in a kit.

XL-FW10081PM-en-US Rev D 2016-03-01 Amendments and errors reserved. © SAF-HOLLAND, Inc.

Simplex Yard Spotter (With and Without Lockout) Rebuild Kits

4000513
Kit, Complete Rebuild, Simplex Yard Spotter W/Lockout

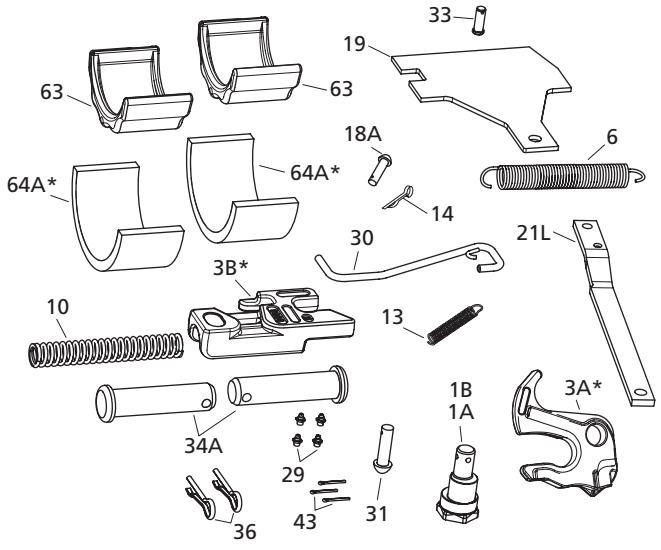

4000500
Kit, Complete Rebuild, Simplex Yard Spotter w/o Lockout

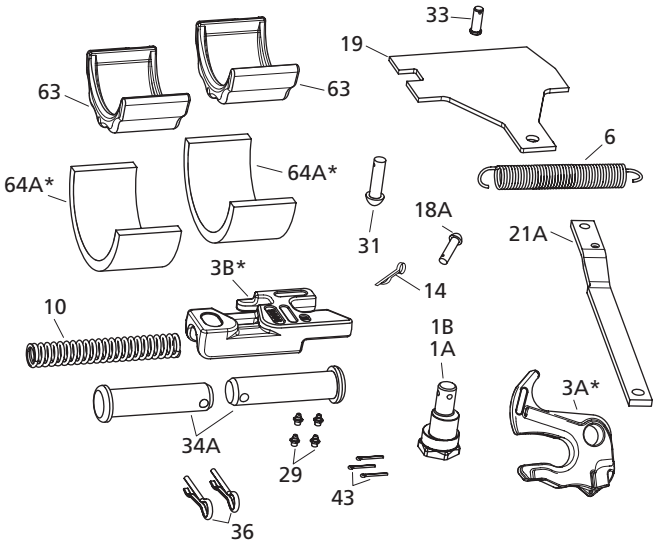

ITEM	DESCRIPTION	PART NUMBER	QTY.	WEIGHT LBS [KG]
1A	Eccentric Jaw Pin	4109916	1	1.87 [0.85]
1B	Eccentric Jaw Pin, Oversized	4109977	1	1.90 [0.86]
3A*	Lock Jaw, Right-Hand	4109940	1	8.25 [3.74]
3B*	Lock, Right-Hand	4109808	1	6.59 [2.99]
6	Spring, Extension	4100333	1	0.76 [0.34]
10	Spring, Lock	1200706	1	0.63 [0.29]
13	Spring, Extension, Lockout	4100212	1	0.04 [0.02]
14	Pin, Cotter, .19" Diameter x 1.25" Long	9900170	1	0.01 [0.005]
18A	Pin, Lever Bar	5400766	1	0.25 [0.11]
19	Plate, Cover	XA-10969	1	4.03 [1.83]
21A	Lever Bar - Air Simplex	4100215	1	2.38 [1.08]
21L	Lever Bar, Lockout	4100211	1	2.36 [1.07]
29	Fittings, Grease	XB-H-38	4	0.01 [0.005]
30	Handle, Lockout Cylinder	4100206	1	0.51 [0.23]
31	Pin, Clevis, .50" Diameter X 2.00" Long	9900177	1	0.12 [0.06]
33	Pin, Clevis, .49" Diameter X 1.36" Long	5400219	1	0.08 [0.04]
34A	Pin, Bracket	5400705	2	3.25 [1.47]
36	Pin, Cotter, .38" Diameter x 1.50" Long	9900169	2	0.08 [0.04]
43	Pin, Cotter, .13" Diameter x 1.25" Long	84261	3	0.01 [0.005]
63	Shoe, Bracket	4109811	2	4.86 [2.20]
64A*	Insert, .58" Bracket, See 4000529 or 4000505	4100358	2	1.01 [0.46]

*Not sold individually - must be purchased in a kit.

 Amendments and errors reserved. © SAF-HOLLAND, Inc.

SAF-HOLLAND Group

Simplex Yard Spotter with Bracket Head Castings Only

Discontinued - Replacement Parts Only

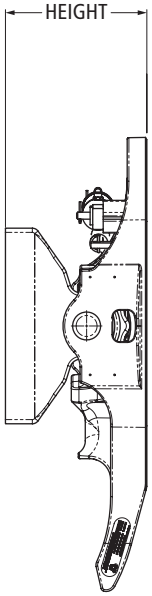

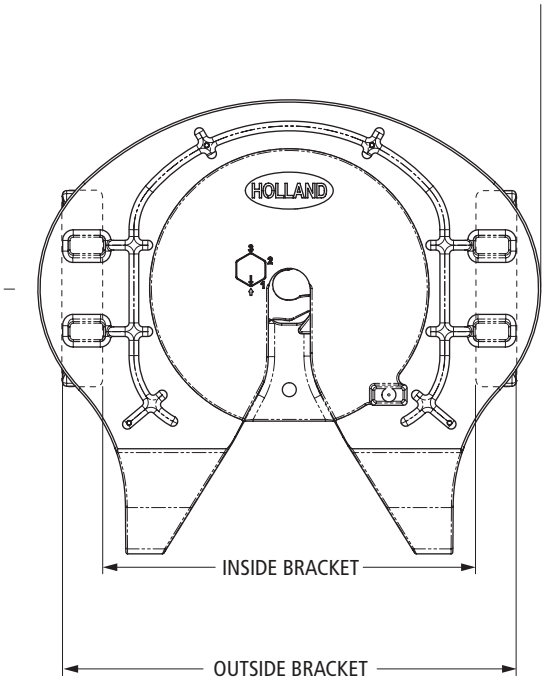

4019049
Without Lockout

FW PART NUMBER	BRACKET PART NUMBER+**	BRACKET WEIGHT LB [KG]	HEIGHT IN [MM]	INSIDE BRACKET	OUTSIDE BRACKET	FW WEIGHT LB [KG]
4019541	4109976	10.48 [4.75]	5.93" [151]	26.13" [664]	31.88" [810]	322.90 [146.46]
4019059	4109960	17.13 [7.77]	8.18" [208]			336.90 [152.82]
4019049	4109982	23.86 [10.82]	9.68" [246]	25.50" [648]	32.50" [826]	352.50 [159.89]

* No longer available.
\+ Only one bracket included in part number.
** See Bracket Section for more information.

XL-FW10081PM-en-US Rev D 2016-03-01 Amendments and errors reserved. © SAF-HOLLAND, Inc.

Simplex Yard Spotter with Narrow Or Wide Flat Base Brackets

Discontinued - Replacement Parts Only

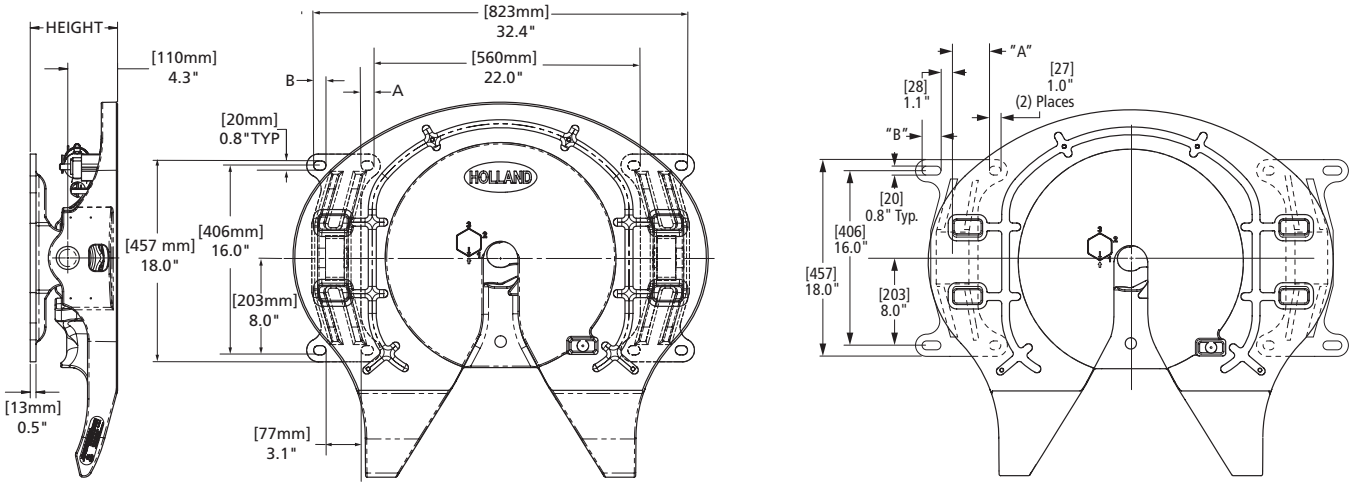

WIDE **NARROW**

4019486
Without Lockout

FW PART NUMBER	BRACKET PART NUMBER+**	BRACKET WEIGHT LB [KG]	FLAT BASE TYPE	HEIGHT IN [MM]	A	B	FW WEIGHT LB [KG]
4019486	4109839	25.44 [11.54]	Narrow	7.12" [181]	2.28" [58]	1.06" [27]	352.21 [159.76]
4019496	4109933	30.20 [13.70]	Wide	8.50" [216]	3.16" [80]	1.75" [44]	361.81 [164.11]

* No longer available.
\+ Only one bracket included in part number.
** See Bracket Section for more information.

 Amendments and errors reserved. © SAF-HOLLAND, Inc.

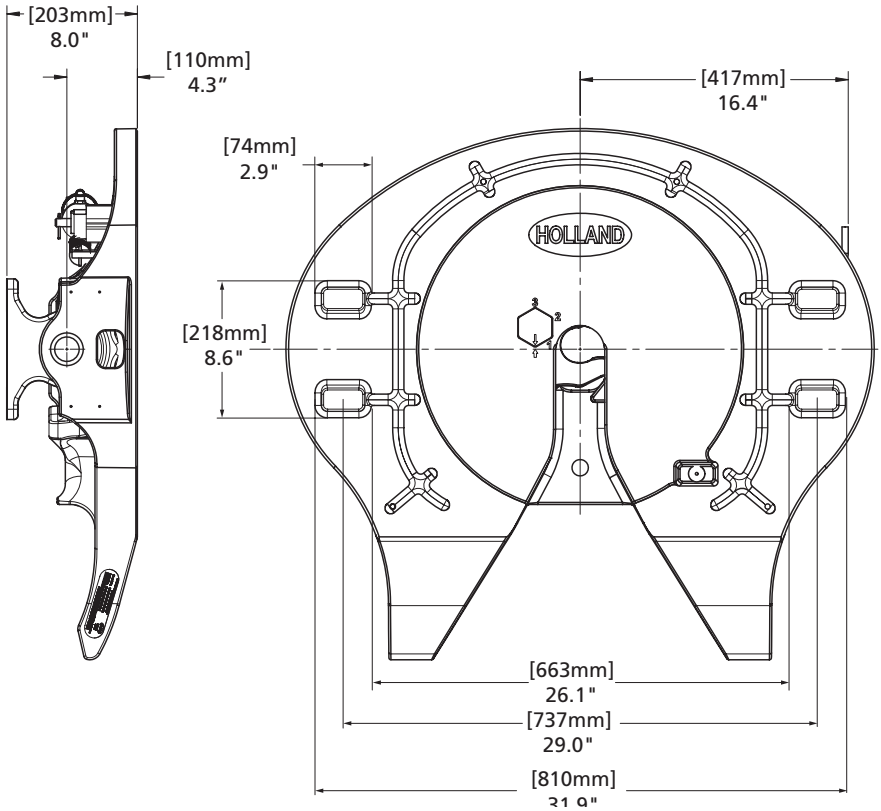

FW PART NUMBER	BRACKET PART NUMBER+**	BRACKET WEIGHT LB [KG]	HEIGHT IN [MM]	INSIDE BRACKET	OUTSIDE BRACKET	FW WEIGHT LB [KG]
4000207	4000205	25.44 [11.54]	8.06"			352.21 [159.76]
4000209	4000205	30.20 [13.70]	8.06"	26.1"	31.9"	361.81 [164.11]

XL-FW10081PM-en-US Rev D 2016-03-01 Amendments and errors reserved. © SAF-HOLLAND, Inc.

THIS PAGE INTENTIONALLY LEFT BLANK

 Amendments and errors reserved. © SAF-HOLLAND, Inc.

FW2870-03184 Exploded View

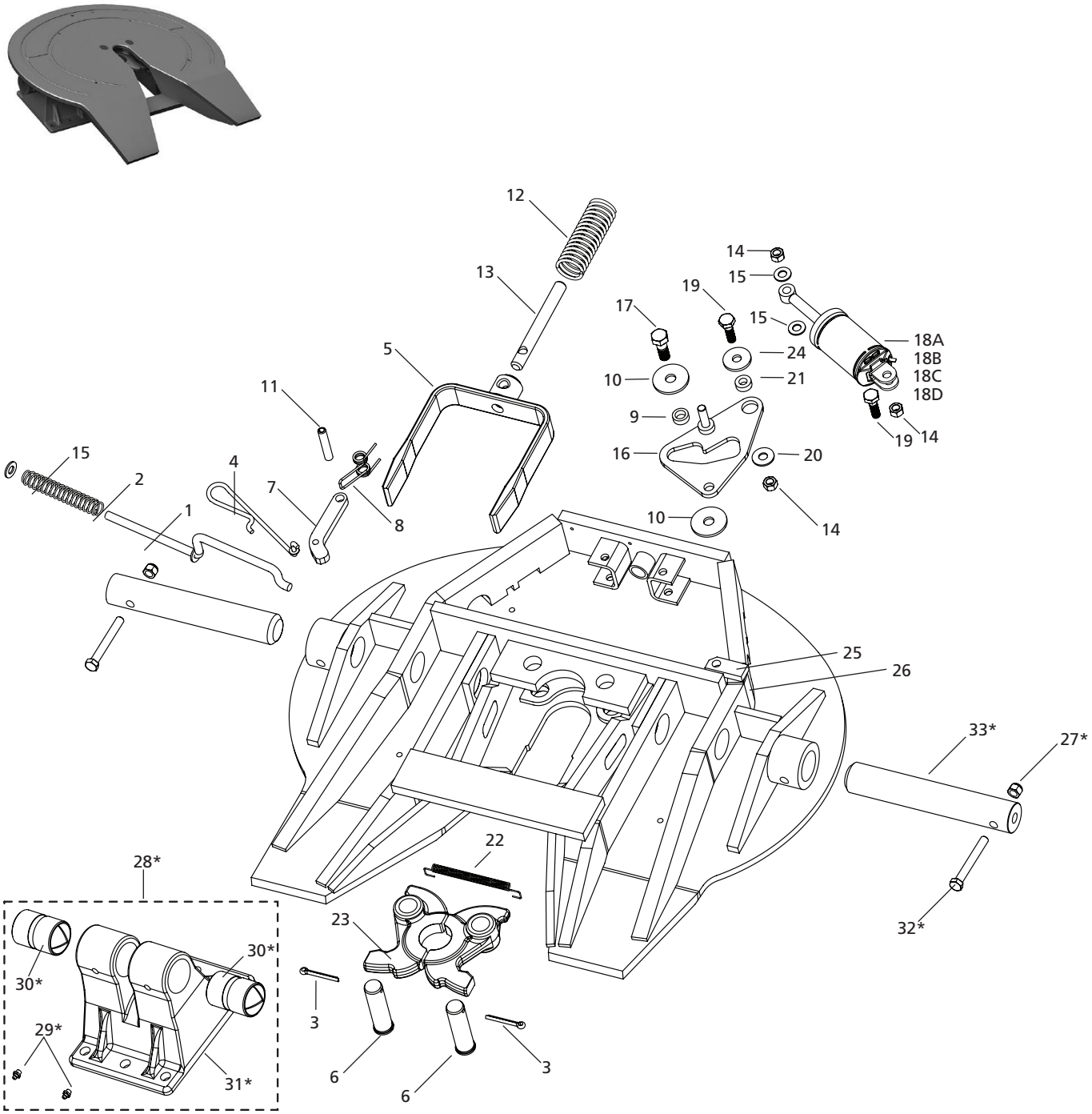

DISCONTINUED MODEL SERVICE PARTS ONLY
Please contact Customer Service for part availability
888.396.6501

XL-FW10081PM-en-US Rev D 2016-03-01 Amendments and errors reserved. © SAF-HOLLAND, Inc.

ITEM	DESCRIPTION	PART NUMBER	QTY.	WEIGHT LBS [KG]
1	Handle S/A Release	XA-1707-16	1	1.00 [0.45]
2	Spring	XB-1028-1	1	0.10 [0.04]
3	Cotter Pin, 1/4″ x 2″	XB-5	2	0.05 [0.02]
4	Handle S/A	XA-3544-1-A	1	0.22 [0.10]
5	Yoke	XA-1703-F	1	5.88 [2.67]
6	Lock Pin	XA-1313	2	1.13 [0.51]
7	Lock Bar	XA-3528	1	0.61 [0.28]
8	Torsion Spring	XB-2149	1	0.06 [0.03]
9	Cam Roller	XA-1507-1	1	0.05 [0.02]
10	Washer	XB-1030-1	2	0.19 [0.09]
11	Roll Pin	XB-21-S-500-2750	1	0.02 [0.01]
12	Spring	XB-1505	1	0.61 [0.28]
13	Yoke Shaft	XA-1706-1	1	0.83 [0.38]
14	Lock Nut, 1/2″-20	XB-T-69-A	3	0.04 [0.02]
15	Washer, 1/2″	XB-PW-1732-1-116	3	0.02 [0.01]
16	Cam Plate S/A	XA-1705-11	1	1.86 [0.84]
17	HHCS, 5/8″-18 x 13/4″	XB-CX-58-F-134	1	0.21 [0.10]
18A	Air Cyl. S/A for XA-2801-03185-4	XA-2524-03185-4	1	4.58 [2.08]
18B	Air Cyl. S/A for XA-2801-03185-3	XA-2524-03185-4	1	4.58 [2.08]
18C	Air Cyl. S/A for XA-2801-03185-2	XA-2524-03185-1	1	4.60 [2.09]
18D	Air Cyl. S/A for XA-2801-03185-1	XA-2524-03185-1	1	4.60 [2.09]
19	HHCS, 1/2″-20 x 13/4″	XB-2083	2	0.13 [0.06]
20	Washer, 1/2″	XB-T-49	1	0.04 [0.02]
21	Roller	XA-1029	1	0.06 [0.03]
22	Extension Spring	XB-GT-13-1	1	0.07 [0.03]
23	Lock Set	XA-1704-X	1	7.20 [3.27]
24	Washer, 9/16″	XB-10267	1	0.12 [0.05]
25	Cylinder Support	XA-2836	1	0.31 [0.14]
26	Spacer	XA-2836-1	1	0.11 [0.05]
27*	Lock Nut, 1/2″-13	XB-0103	2	0.04 [0.02]
28*	Bracket S/A	XA-03189-1	2	28.35 [12.86]
29*	Lub Fitting	XB-H-38	4	0.01 [0.005]
30*	Bearing	XA-0861	4	0.76 [0.34]
31*	Bracket S/A	XA-03193-1	2	27.03 [12.26]
32*	HHCS, 1/2″-13 x 4″	XB-BR-12-C-4	2	0.26 [0.12]
33*	Pivot Shaft	XA-2809	2	9.10 [4.13]

* Not included in rebuild kit.

 Amendments and errors reserved. © SAF-HOLLAND, Inc.



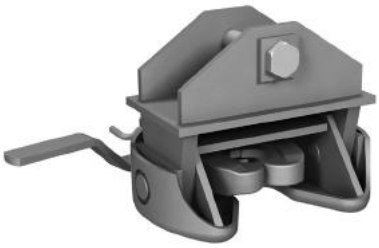

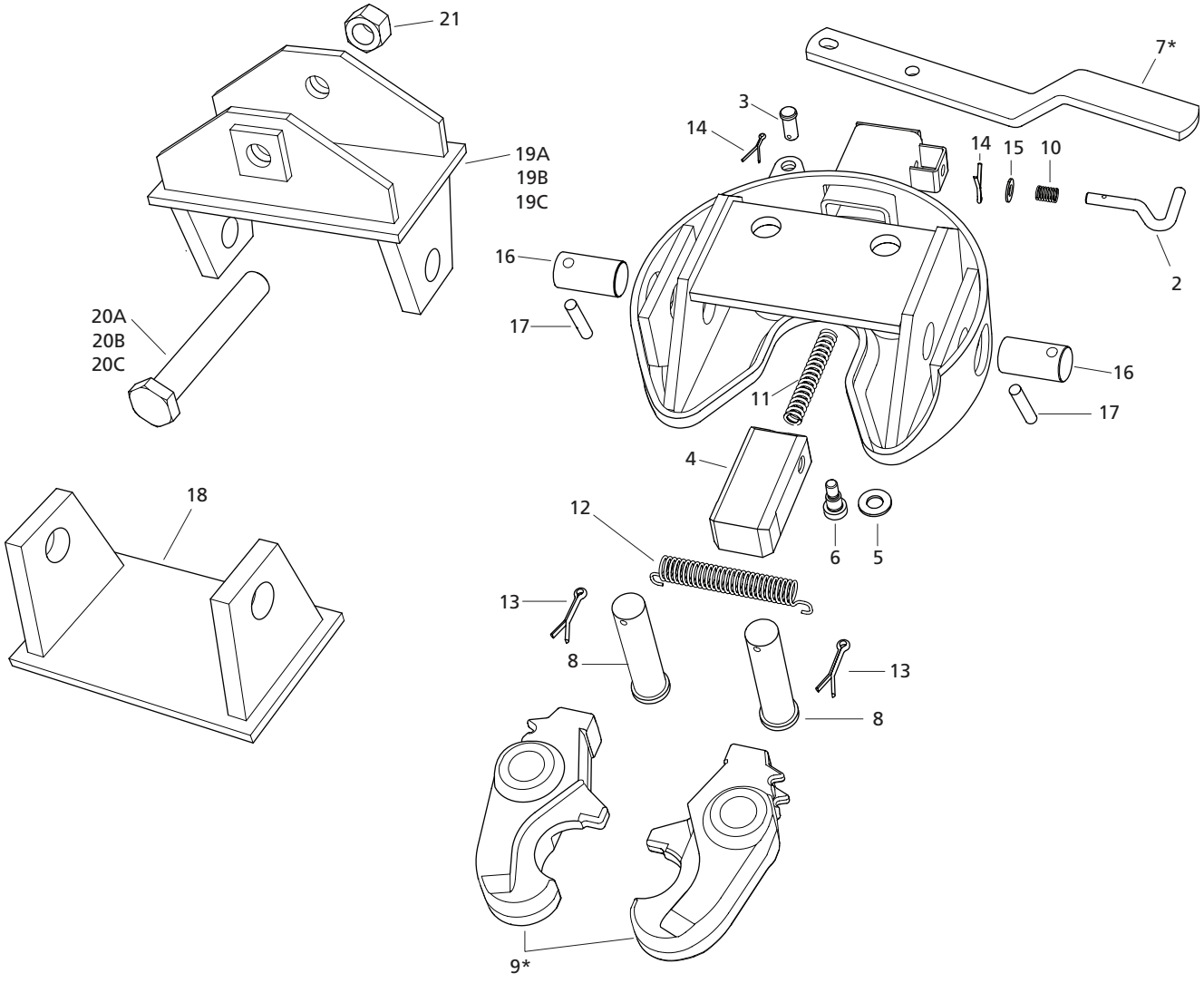

XL-FW10081PM-en-US Rev D 2016-03-01 Amendments and errors reserved. © SAF-HOLLAND, Inc.

ITEM	DESCRIPTION	PART NUMBER	QTY.	WEIGHT LBS [KG]
2	Handle,Tee	XB-BFW0118	1	0.15 [0.07]
3	Pin, Clevis, 1/2" Dia. X 1.06" LG	XB-CLP-052-26	1	0.07 [0.03]
4	Block, Locking (Machined)	XB-BFW0170-01	1	2.84 [1.29]
5	Washer, Flat 1.063" O.D. x .531" I.D. x .095", Zinc	XB-PW-016-17	1	0.02 [0.01]
6	Screw, SHLD. 1/2" Dia. x 1/2" LG	XB-SHS-007-02	1	0.08 [0.04]
7*	Lever, Trip - Formed, See BFW0174-1	BFW0122	1	2.58 [1.17]
8	Pin, Clevis	XB-CLP-052-25	2	0.94 [0.43]
9*	Jaw, Coupling, See BFW0174	XB-BFW0172	2	5.18 [2.35]
10	Spring, Compression	XB-SPG-020-06	1	0.01 [0.005]
11	Spring, Compression	XB-SPG-202-08	1	N/A
12	Spring, Compression	XB-SPG-020-21	1	0.10 [0.05]
13	Pin, Cotter, 3/16" Dia. x 1-1/2" LG	XB-CTP-014-59	2	0.01 [0.005]
14	Pin, Cotter, 1/8" Dia. x 1-1/4" LG	XB-CTP-014-51	2	0.40 [0.18]
15	Washer, Plain .406" I.D. x .812" O.D. x .062" Thick	XB-PW-016-03	1	0.01 [0.005]
16	Pin, Clevis	BFW0173	2	0.77 [0.35]
17	Pin, Groove .375" x 2" Type E Shearproof	XB-GP-052-21	2	0.06 [0.03]
18	Plate S/A, Attaching	BFW0101	1	14.00 [6.35]
19A	Plate S/A, Swivel Mounting 3.5"	BFW0104-35	1	21.96 [9.96]
19B	Plate S/A, Swivel Mounting 4.0"	BFW0104-40	1	21.96 [9.96]
19C	Plate S/A, Swivel Mounting 4.5"	BFW0104-45	1	21.96 [9.96]
20A	Screw, Hex Cap GR-5 1-14 x 6.06" CL 2A PLN	XB-SP0050-73	1	1.61 [0.73]
20B	Screw, Hex Cap GR-5 1-14 x 6.50" CL 2A PLN	XB-SP0050-97	1	1.71 [0.78]
20C	HHCS 1-14 x 7"	XB-HHC-050-52	1	1.79 [0.81]
21	Nut, Lock 1-14	XB-SLN-012-46	1	0.32 [0.15]

*Not sold individually - must be purchased in a kit.

REPLACEMENT TOP PLATE PART NUMBERS	
PART NUMBER	DESCRIPTION
FW0001-S	All FW0001/FW0002 Models

 Amendments and errors reserved. © SAF-HOLLAND, Inc.

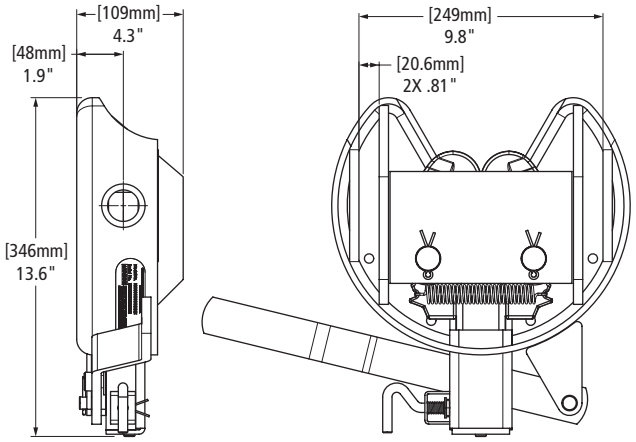

FW0001-S

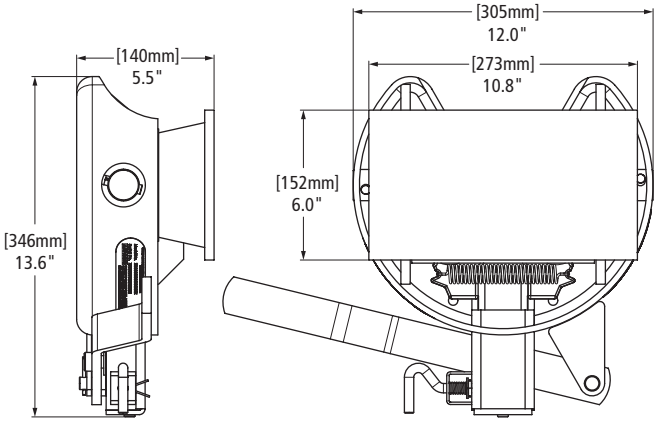

FW0001

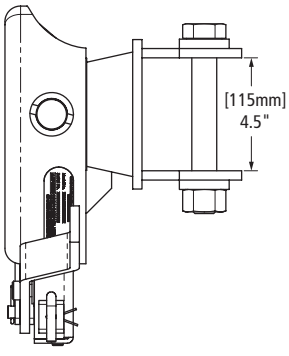

FW0002-45

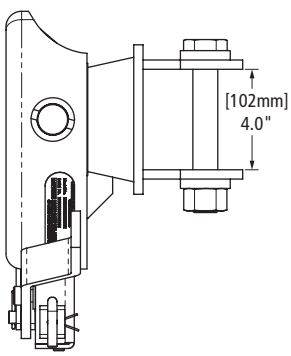

FW0002-40

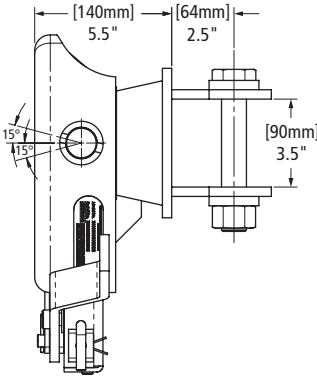

FW0002-35

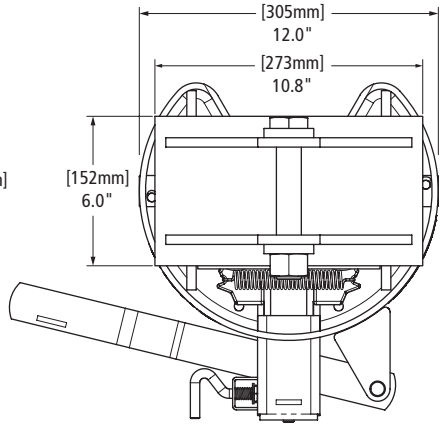

FW0002

XL-FW10081PM-en-US Rev D 2016-03-01 Amendments and errors reserved. © SAF-HOLLAND, Inc.

BFW0174
Fifth Wheel Jaw Replacement & Installation Kit

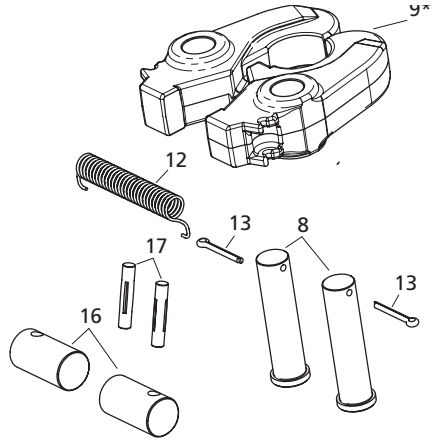

BFW0174-1
Kit, Release Handle

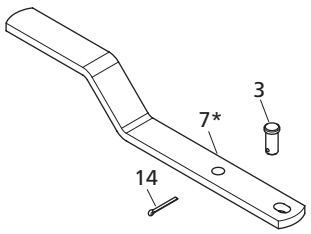

ITEM	DESCRIPTION	PART NUMBER	QTY.	WEIGHT LBS [KG]
3	Pin, Clevis, 1/2" Dia. X 1.06" LG	XB-CLP-052-26	1	0.07 [0.03]
7*	Lever, Trip - Formed	BFW0122	1	2.58 [1.17]
8	Pin, Clevis	XB-CLP-052-25	2	0.94 [0.43]
9*	Jaw, Coupling	XB-BFW0172	2	5.18 [2.35]
12	Spring, Compression	XB-SPG-020-21	1	0.10 [0.05]
13	Pin, Cotter, 3/16" Dia. x 1-1/2" LG	XB-CTP-014-59	2	0.01 [0.005]
14	Pin, Cotter, 1/8" Dia. x 1-1/4" LG	XB-CTP-014-51	1	0.40 [0.18]
16	Pin, Clevis	BFW0173	2	0.77 [0.35]
17	Pin, Groove .375" x 2" Type E Shearproof	XB-GP-052-21	2	0.06 [0.03]

*Not sold individually - must be purchased in a kit.

 Amendments and errors reserved. © SAF-HOLLAND, Inc.

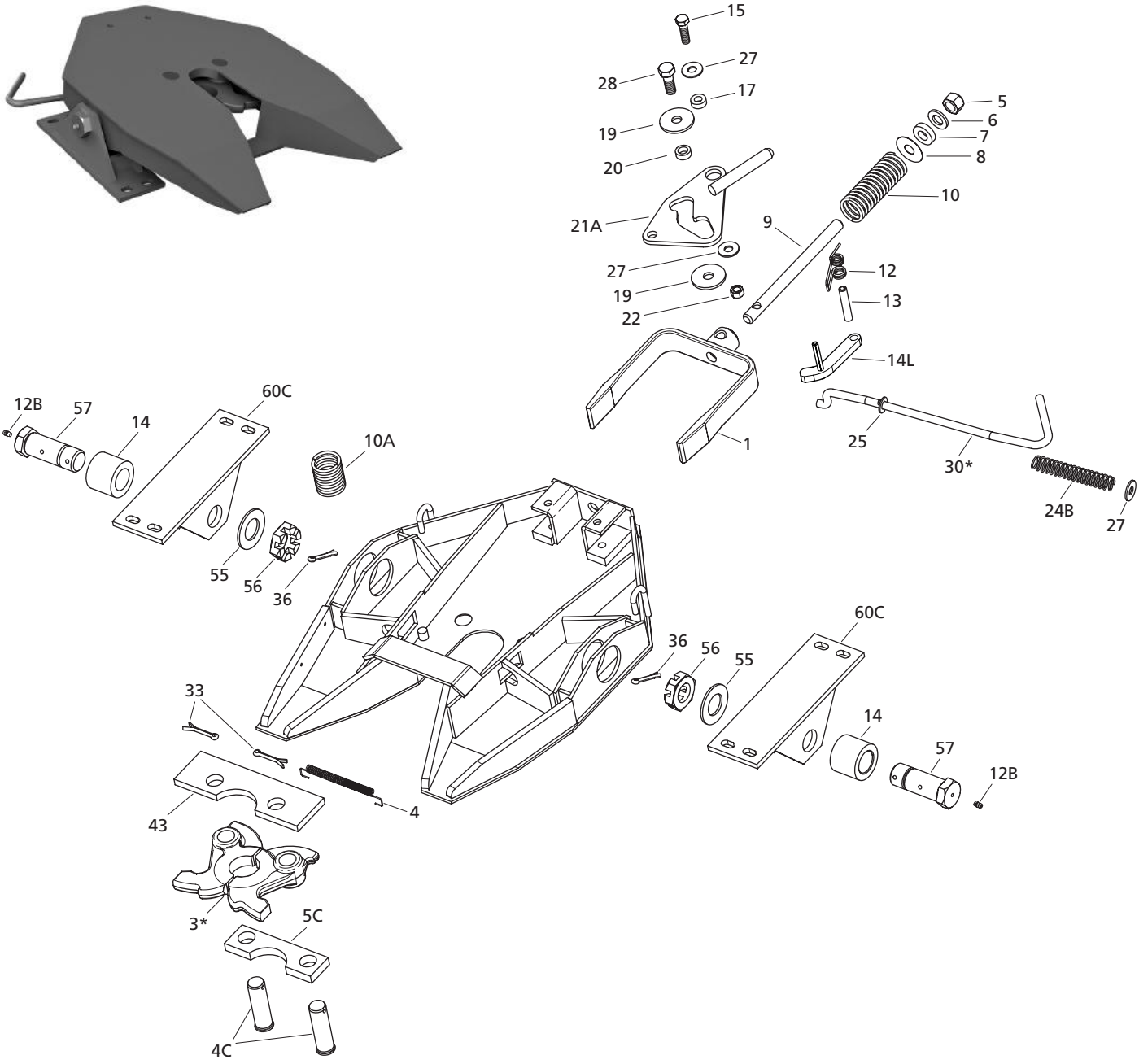

FW6000-10
Base Parts

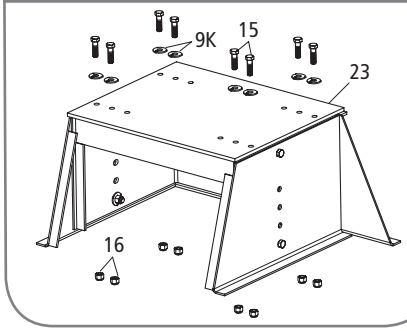

FW6000-20
Base Parts

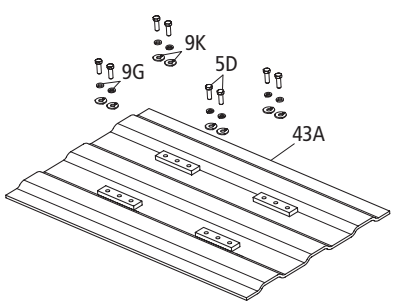

XL-FW10081PM-en-US Rev D 2016-03-01 Amendments and errors reserved. © SAF-HOLLAND, Inc.

ITEM	DESCRIPTION	PART NUMBER	QTY.	WEIGHT LBS [KG]
1	Yoke	XA-07295-THK	1	5.87 [2.66]
3*	Set, Lock Jaw, See RK-63512	XA-01613	1	7.52 [3.41]
4	Spring, Extension	XB-GT-13-1	1	0.07 [0.03]
4C	Pin, Lock	XA-1313-C	2	1.08 [0.49]
5	Lock Nut, .75"-16 Gr C	XB-HNH-34-F	1	0.14 [0.06]
5C	Bar	XA-01209	1	2.06 [0.93]
5D	HHCS, .50"-20 x 1.50"	XB-E-541	8	0.11 [0.05]
6	Washer, .81" I.D. x 1.47" O.D.	XB-PW-1316-112	1	0.04 [0.02]
7	Washer, Rubber, .75" I.D. x 1.50'' O.D.	XB-1127	1	0.03 [0.01]
8	Tag, Lock Adjustment	XB-02312	1	N/A
9	Shaft, Yoke	XA-1706-3	1	1.27 [0.58]
9G	Washer, Lock, .50" I.D. x .88" O.D.	XB-T-45-1	8	0.02 [0.01]
9K	Washer, Plain 1/2"	XB-01978	8	0.04 [0.02]
10	Spring, Compression	XB-1505	1	0.61 [0.28]
10A	Spring, Compression	XB-6005	1	0.45 [0.20]
12	Spring, Torsion	XB-2149	1	0.06 [0.03]
12B	Fitting, Lube	XB-767	2	0.01 [0.005]
13	Pin, Spring, .50" Diameter x 2.75" Long	XB-21-S-500-2750	1	0.02 [0.01]
14	Bearing, Pivot	XA-6001-4	2	1.77 [0.80]
14L	Lock, Manual Secondary, Left-Hand	XA-3542-L	1	0.67 [0.30]
15	HHCS, .50"-20 x 1.75" Gr 5 Zinc Plate, Nylock	XB-2083	1	0.13 [0.06]
	FW6000-10 Only		8	
16	Nut, Lock 1/2"-20	XB-01561	8	0.05 [0.02]
17	Roller, .52" I.D. x 1" O.D. x .38" Long	XA-1029	1	0.06 [0.03]
19	Washer, .66" I.D. x 2.25" O.D.	XB-1030-1	2	0.19 [0.09]
20	Roller, .66" I.D. x 1" O.D.r x .38" Long	XA-1507	1	0.05 [0.02]
21A	Plate S/A, Cam	XA-1705-9	1	2.36 [1.07]
22	Lock Nut, .50"-20 Gr C, Cam Plates, Bracket Pins , Air Release	XB-T-69-A	1	0.04 [0.02]
23	Box S/A, Adjustable MTG	XA-6510	1	136.80 [62.05]
24B	Spring, Manual Release	XB-1028-1	1	0.10 [0.04]
25	Washer, .53" I.D. x 1.06" O.D.	XB-PW-1732-1-116	1	0.02 [0.01]
27	Washer, .56" I.D. x 1.38" O.D., Manual Release	XB-T-49	3	0.04 [0.02]
28	HHCS, .63"-18 x 1.75" Gr 8	XB-CX-58-F-134	1	0.21 [0.10]
30*	Handle, Release, See RK-6003	XA-6003	1	1.23 [0.56]
33	Pin, Cotter, .25" Diameter x 2" Long	XB-5	2	0.05 [0.02]
36	Pin, Cotter, .25" Dia. X 2.5" Long (Service Only)	XB-T-60	2	0.04 [0.02]
43	Plate, Cross	XA-6001-3	1	3.85 [1.75]
43A	Plate S/A, MTG	XA-6520	1	120.56 [54.69]
55	Washer (Special) 1.50" I.D. x 2.75" O.D. x .156" Thk	XA-T-56	2	0.18 [0.08]
56	Nut, Hex Slot 1-1/2"-6	XA-T-9N-2	2	0.50 [0.23]
57	Bolt, Bracket	XA-6004	2	2.34 [1.06]
60C	Bracket S/A, See RK-11922	XA-6002	2	9.33 [4.23]

*Not sold individually - must be purchased in a kit.

REPLACEMENT TOP PLATE PART NUMBERS	
PART NUMBER	DESCRIPTION
XA-6001-A	LH Release

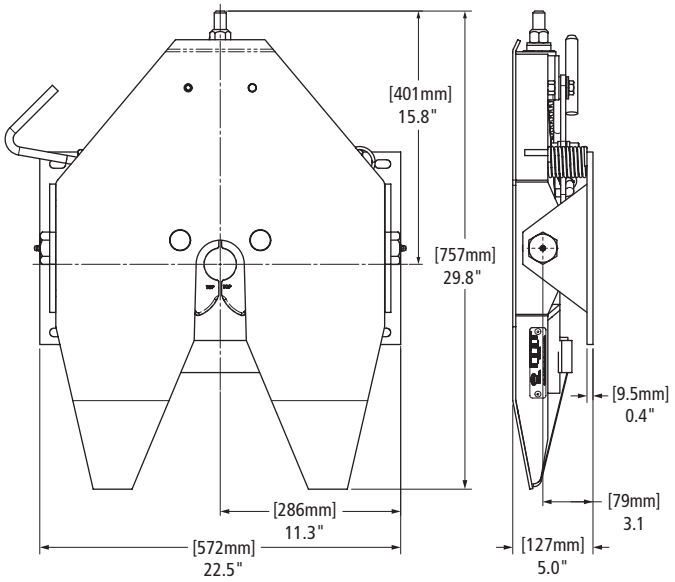

 Amendments and errors reserved. © SAF-HOLLAND, Inc.

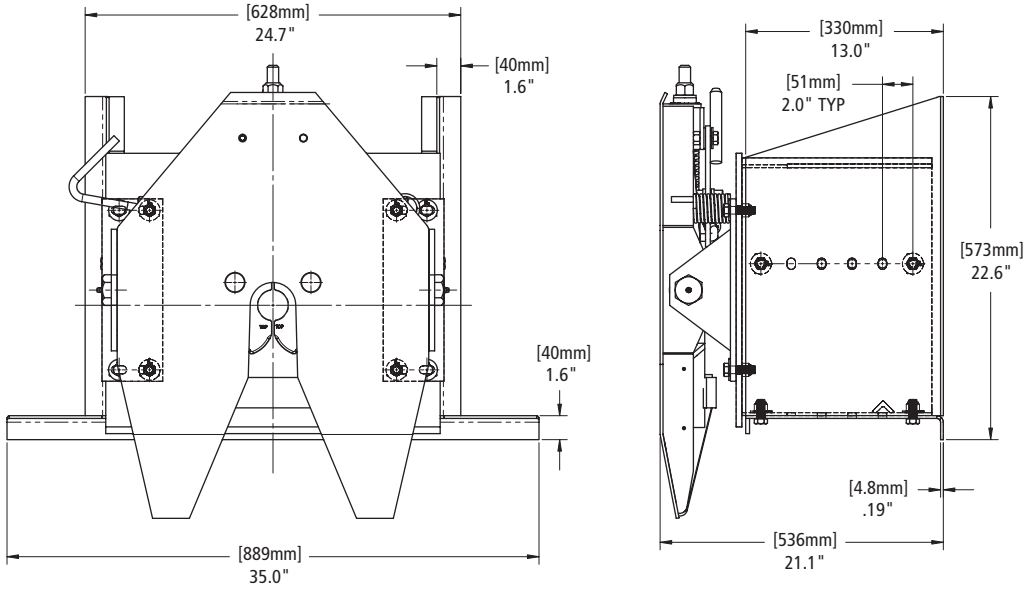

FW6000-10

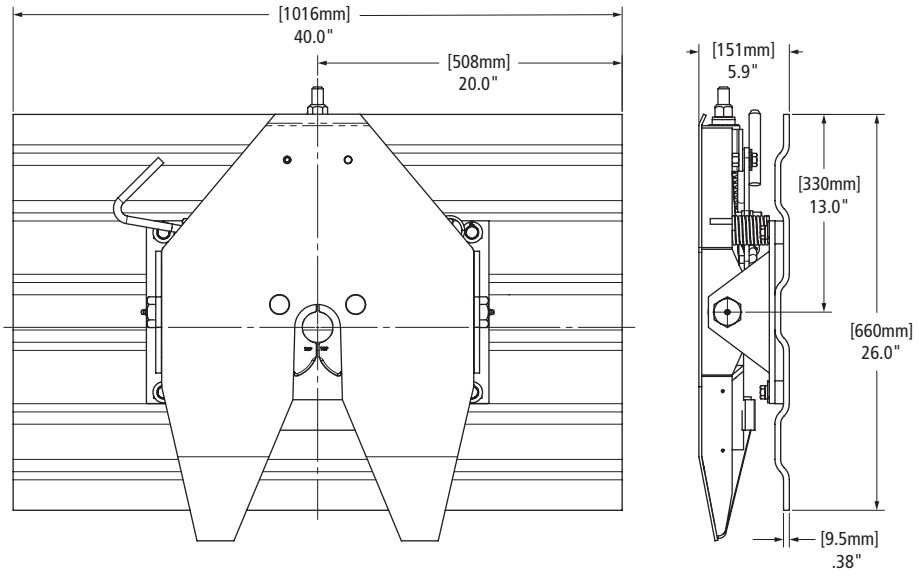

FW6000-20

XL-FW10081PM-en-US Rev D 2016-03-01 Amendments and errors reserved. © SAF-HOLLAND, Inc.

RK-6003
Kit, Release Handle

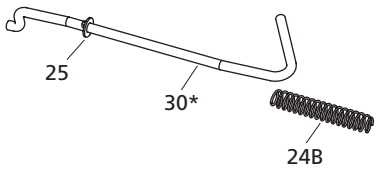

RK-11922
Bracket & Hardware Kit - FW1900

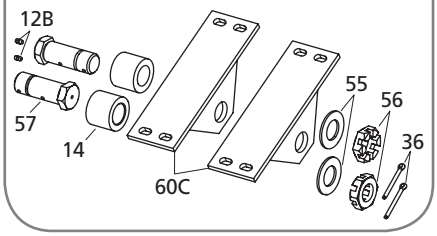

RK-11923
Hardware Kit - FW1900

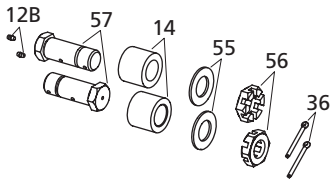

RK-63512
Kit, Complete Rebuild (XA-6001-A)

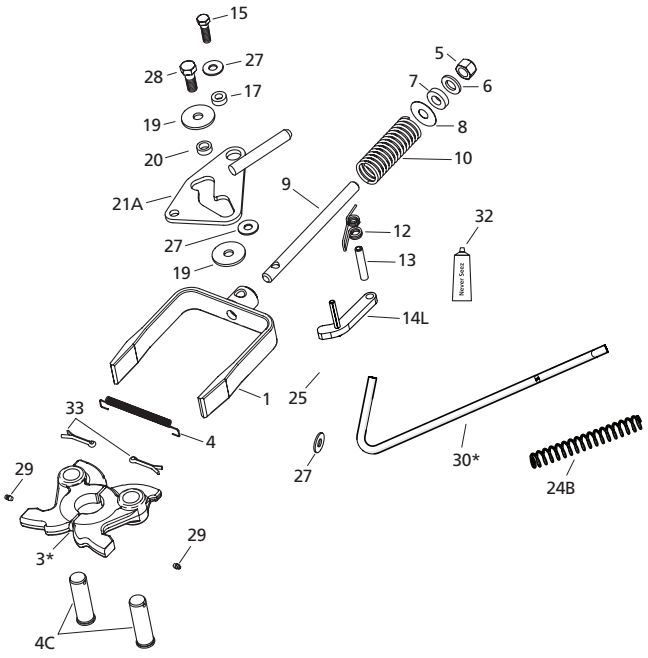

ITEM	DESCRIPTION	PART NUMBER	QTY.	WEIGHT LBS [KG]
1	Yoke	XA-07295-THK	1	5.87 [2.66]
3*	Set, Lock Jaw	XA-01613	1	7.52 [3.41]
4	Spring, Extension	XB-GT-13-1	1	0.07 [0.03]
4C	Pin, Lock	XA-1313-C	2	1.08 [0.49]
5	Lock Nut, .75"-16 Gr C	XB-HNH-34-F	1	0.14 [0.06]
6	Washer, .81" I.D. x 1.47" O.D.	XB-PW-1316-112	1	0.04 [0.02]
7	Washer, Rubber, .75" I.D. x 1.50'' O.D.	XB-1127	1	0.03 [0.01]
8	Tag, Lock Adjustment	XB-02312	1	N/A
9	Shaft, Yoke	XA-1706-3	1	1.27 [0.58]
10	Spring, Compression	XB-1505	1	0.61 [0.28]
12	Spring, Torsion	XB-2149	1	0.06 [0.03]
12B	Fitting, Lube	XB-767	2	0.01 [0.005]
13	Pin, Spring, .50" Diameter x 2.75" Long	XB-21-S-500-2750	1	0.02 [0.01]
14	Bearing, Pivot	XA-6001-4	2	1.77 [0.80]
14L	Lock, Manual Secondary, Left-Hand	XA-3542-L	1	0.67 [0.30]
15	HHCS, .50"-20 x 1.75" Gr 5 Zinc Plate, Nylock	XB-2083	1	0.13 [0.06]
17	Roller, .52" I.D. x 1" O.D. x .38" Long	XA-1029	1	0.06 [0.03]
19	Washer, .66" I.D. x 2.25" O.D.	XB-1030-1	2	0.19 [0.09]
20	Roller, .66" I.D. x 1" O.D.r x .38" Long	XA-1507	1	0.05 [0.02]
21A	Plate S/A, Cam	XA-1705-9	1	2.36 [1.07]
22	Lock Nut, .50"-20 Gr C, Cam Plates, Bracket Pins , Air Release	XB-T-69-A	1	0.04 [0.02]
24B	Spring, Manual Release	XB-1028-1	1	0.10 [0.04]
25	Washer, .53" I.D. x 1.06" O.D.	XB-PW-1732-1-116	1	0.02 [0.01]
27	Washer, .56" I.D. x 1.38" O.D., Manual Release	XB-T-49	3	0.04 [0.02]
28	HHCS, .63"-18 x 1.75" Gr 8	XB-CX-58-F-134	1	0.21 [0.10]
29	Lube Fitting	XB-H-38	2	0.01 [0.005]
30*	Handle, Release	XA-6003	1	1.23 [0.56]
30B	Kit, Release Handle	RK-6003	1	1.34 [0.61]
32	Never-Seez	XB-02967	1	NA
33	Pin, Cotter, .25" Diameter x 2" Long	XB-5	2	0.05 [0.02]
36	Pin, Cotter, .25" Dia. X 2.5" Long (Service Only)	XB-T-60	2	0.04 [0.02]
55	Washer (Special) 1.50" I.D. x 2.75" O.D. x .156" Thk	XA-T-56	2	0.18 [0.08]
56	Nut, Hex Slot 1-1/2"-6	XA-T-9N-2	2	0.50 [0.23]
57	Bolt, Bracket	XA-6004	2	2.34 [1.06]
60C	Bracket S/A	XA-6002	2	9.33 [4.23]

*Not sold individually - must be purchased in a kit.

 Amendments and errors reserved. © SAF-HOLLAND, Inc.

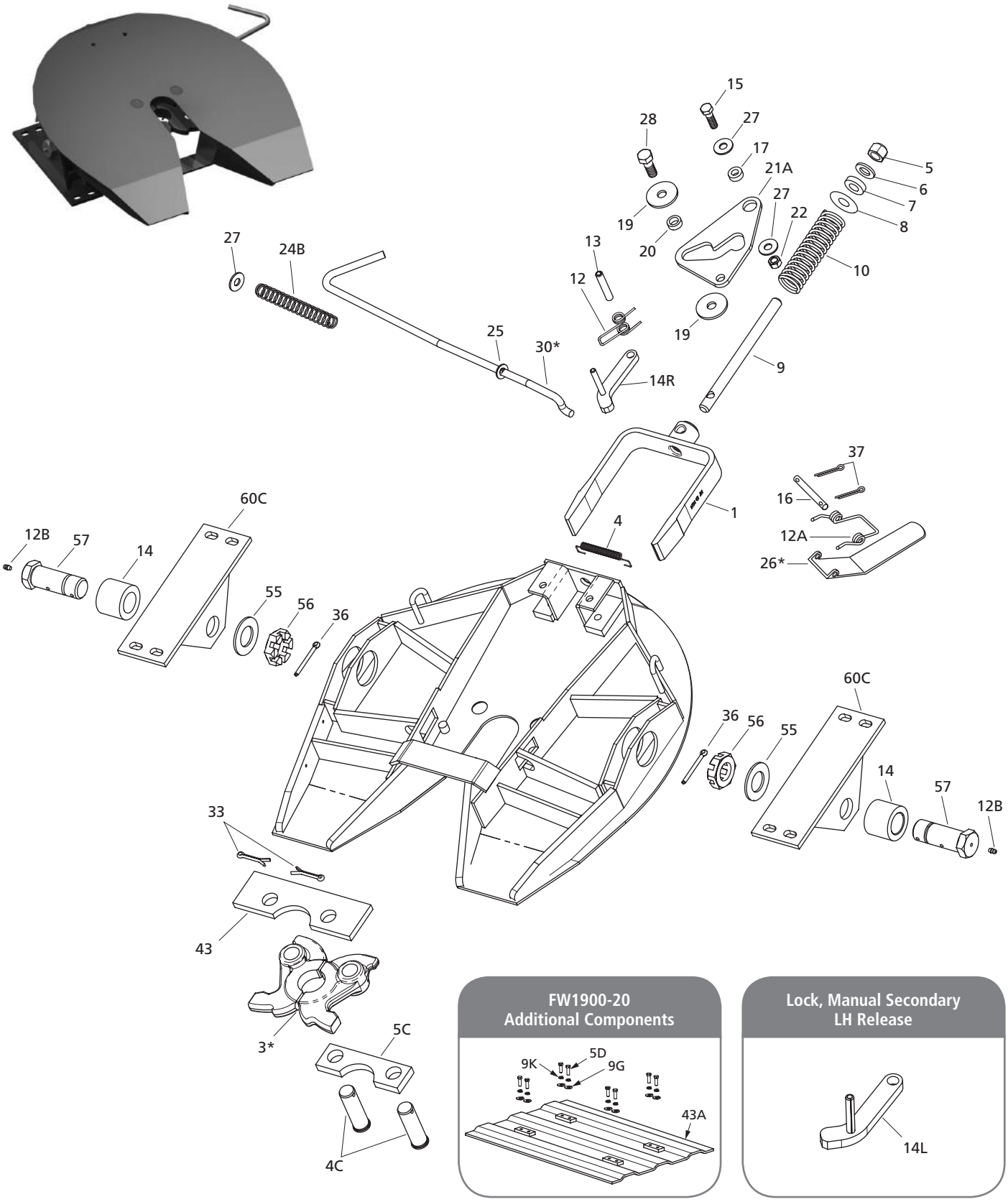

FW1900-20 Additional Components

Lock, Manual Secondary LH Release

XL-FW10081PM-en-US Rev D 2016-03-01 Amendments and errors reserved. © SAF-HOLLAND, Inc.

ITEM	DESCRIPTION	PART NUMBER	QTY.	WEIGHT LBS [KG]
1	Yoke	XA-07295-THK	1	5.87 [2.66]
3*	Lock Jaw Set, See RK-63507	XA-01613	1	7.52 [3.41]
4	Spring, Extension	XB-GT-13-1	1	0.07 [0.03]
4C	Pin, Lock	XA-1313-C	2	1.08 [0.49]
5	Lock Nut, .75"-16 Gr C	XB-HNH-34-F	1	0.14 [0.06]
5C	Bar	XA-01209	1	2.06 [0.93]
5D	HHCS, .50"-20 x 1.50" Gr 5, FW-1900-20 Only	XB-E-541	8	0.11 [0.05]
6	Washer, .81" I.D. x 1.47" O.D.	XB-PW-1316-112	1	0.04 [0.02]
7	Washer, Rubber, .75" I.D. x 1.50'' O.D.	XB-1127	1	0.03 [0.01]
8	Tag, Lock Adjustment	XB-02312	1	N/A
9	Shaft, Yoke	XA-1706-3	1	1.27 [0.58]
9G	Washer, Lock, .50" I.D. x .88" O.D.	XB-T-45-1	8	0.02 [0.01]
9K	Washer, Plain 1/2", FW-1900-20 Only	XB-01978	8	0.04 [0.02]
10	Spring, Compression	XB-1505	1	0.61 [0.28]
12	Spring, Torsion	XB-2149	1	0.06 [0.03]
12A	Spring, Torsion	XB-1044	1	0.10 [0.05]
12B	Fitting, Lube	XB-767	2	0.01 [0.005]
13	Pin, Spring, .50" Diameter x 2.75" Long	XB-21-S-500-2750	1	0.02 [0.01]
14	Bearing, Pivot	XA-6001-4	2	1.77 [0.80]
14L	Lock, Manual Secondary, Left-Hand	XA-3542-L	1	0.67 [0.30]
14R	Lock, Manual Secondary, Right-Hand	XA-3542-R	1	0.67 [0.30]
15	HHCS, .50"-20 x 1.75" Gr 5 Zinc Plate, Nylock	XB-2083	1	0.13 [0.06]
16	Pin, .50" Diameter x 4.50" Long	XA-1055	1	0.24 [0.11]
17	Roller, .52" I.D. x 1" O.D. x .38" Long	XA-1029	1	0.06 [0.03]
19	Washer, .66" I.D. x 2.25" O.D.	XB-1030-1	2	0.19 [0.09]
20	Roller, .66" I.D. x 1" O.D.r x .38" Long	XA-1507	1	0.05 [0.02]
21A	Cam Plate, Air Release	XA-1705	1	0.80 [0.36]
22	Lock Nut, .50"-20 Gr C, Cam Plates, Bracket Pins , Air Release	XB-T-69-A	1	0.04 [0.02]
24B	Spring, Manual Release	XB-1028-1	1	0.10 [0.04]
25	Washer, .53" I.D. x 1.06" O.D.	XB-PW-1732-1-116	1	0.02 [0.01]
26*	Lock Guard	XA-3514	1	0.89 [0.40]
27	Washer, .56" I.D. x 1.38" O.D.	XB-T-49	3	0.04 [0.02]
28	HHCS, .63"-18 x 1.75" Gr 8	XB-CX-58-F-134	1	0.21 [0.10]
30*	Handle, Release, See RK-1707-2	XA-1707-2	1	1.66 [0.75]
33	Pin, Cotter, .25" Diameter x 2" Long	XB-5	2	0.05 [0.02]
36	Pin, Cotter, .25" Dia. X 2.5" Long (Service Only)	XB-T-60	2	0.04 [0.02]
37	Pin, Cotter, .13" Diameter x 2" Long	XB-16	2	0.01[0.005]
43	Plate, Cross	XA-6001-3	1	3.85 [1.75]
43A	Plate S/A, Mtg, FW1900-20 Only	XA-6520-A	1	118.91 [56.94]
55	Washer (Special) 1.50" I.D. x 2.75" O.D. x .156" Thk	XA-T-56	2	0.18 [0.08]
56	Nut, Hex Slot 1-1/2"-6	XA-T-9N-2	2	0.50 [0.23]
57	Bolt, Bracket	XA-6004	2	2.34 [1.06]
60C	Bracket S/A, See RK-11922	XA-6002	2	9.33 [4.23]

*Not sold individually - must be purchased in a kit.

REPLACEMENT TOP PLATE PART NUMBERS	
PART NUMBER	DESCRIPTION
XA-1901-A-P	RH Release
XA-1901-A-LH-P	LH Release

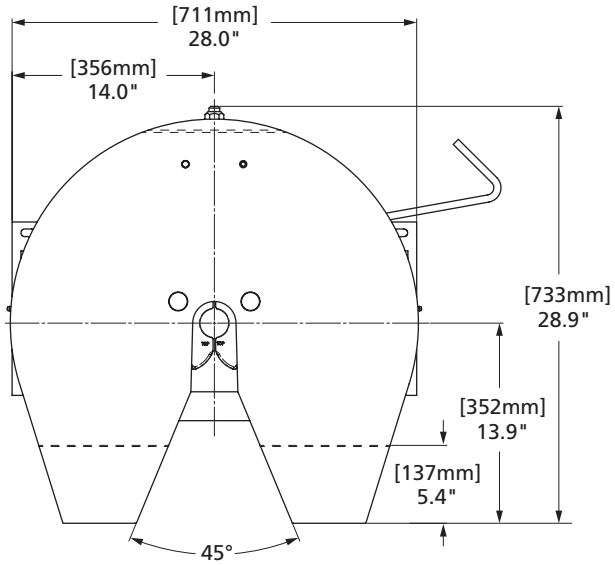

 Amendments and errors reserved. © SAF-HOLLAND, Inc.

FW1900-20 Dimensional Views

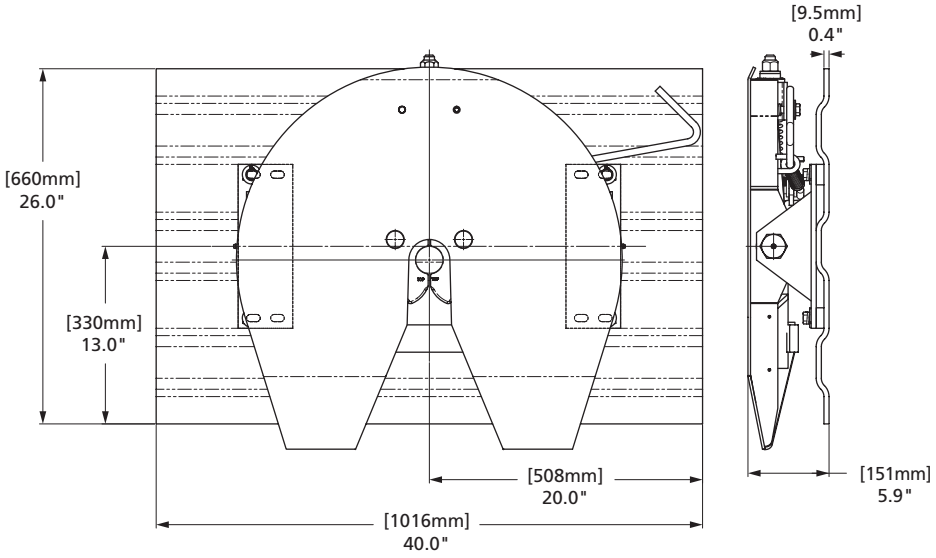

FW1900-20

FW PART NUMBER	REPLACEMENT TOP PLATE NUMBER	REPLACEMENT BRACKET PART NUMBER	REPLACEMENT BASE PLATE PART NUMBER	WEIGHT LBS [KG]
FW1900-20	XA-1901-A-P	RK-11922	RK-11927	248.0 [112.5]

XL-FW10081PM-en-US Rev D 2016-03-01 Amendments and errors reserved. © SAF-HOLLAND, Inc.

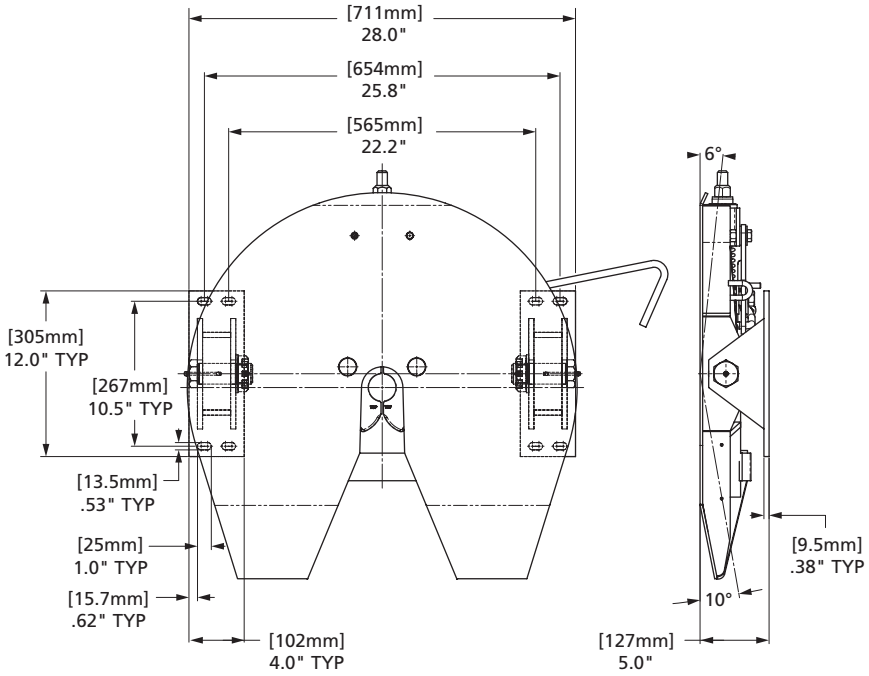

FW1900

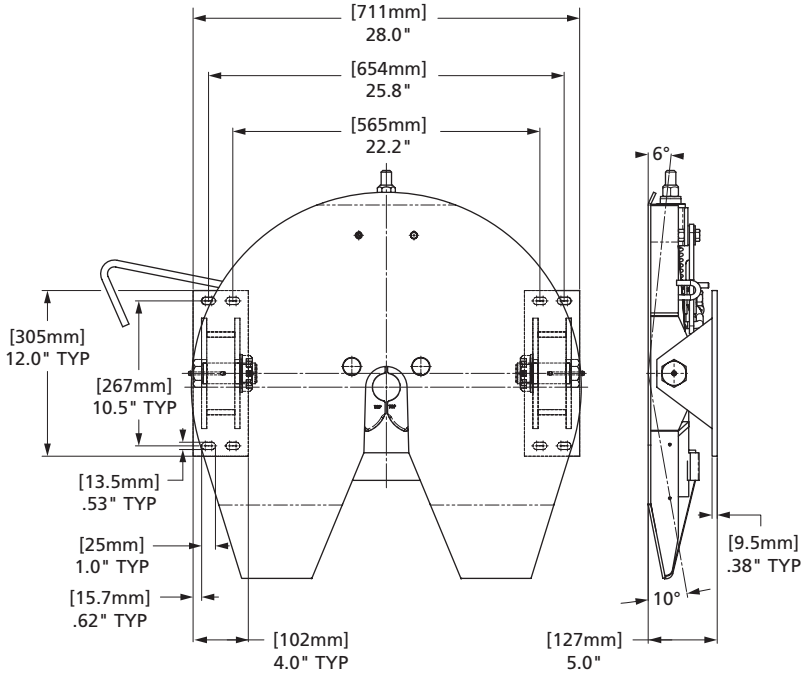

FW1900-LH

FW PART NUMBER	REPLACEMENT TOP PLATE NUMBER	REPLACEMENT BRACKET PART NUMBER	WEIGHT LBS [KG]
FW1900	XA-1901-A-P	RK-11922	128.0 [58.1]
FW1900-LH	XA-1901-A-LH-P	RK-11922	128.0 [58.1]

 Amendments and errors reserved. © SAF-HOLLAND, Inc.

SAF-HOLLAND Group

RK-1707-2
Kit, Handle

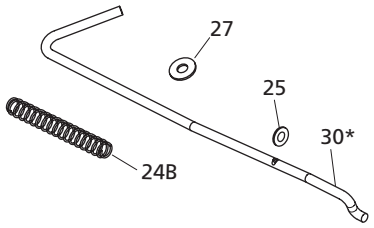

RK-11922
Bracket & Hardware Kit - FW1900

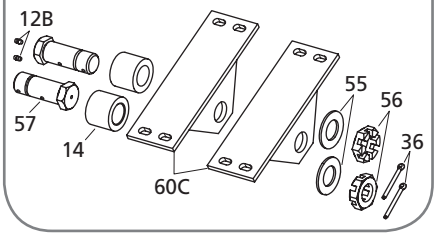

RK-11923
Hardware Kit - FW1900

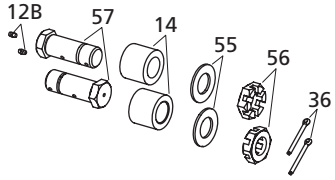

RK-11927
Mounting Plate Kit

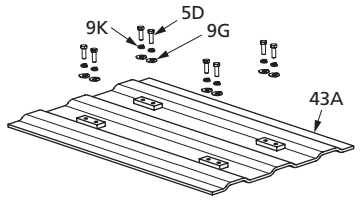

ITEM	DESCRIPTION	PART NUMBER	QTY.	WEIGHT LBS [KG]
5D	HHCS, .50"-20 X 1.50" GR 5	XB-E-541	8	0.11 [0.05]
9G	Washer, Lock, .50" I.D. X .88" O.D.	XB-T-45-1	8	0.02 [0.01]
9K	Washer, Plain 1/2"	XB-01978	8	0.04 [0.02]
11A*	Plate S/A, MTG	XA-1313	2	1.13 [0.51]
12B	Fitting, Lube	XB-767	2	0.01 [0.005]
14	Bearing, Pivot	XA-6001-4	2	1.77 [0.80]
24B	Spring, Manual Release	XB-1028-1	1	0.10 [0.04]
25	Washer, .53" I.D. x 1.06" O.D.	XB-PW-1732-1-116	1	0.02 [0.01]
27	Washer, .56" I.D. x 1.38" O.D.	XB-T-49	1	0.04 [0.02]
30*	Handle, Release	XA-1707-2	1	1.66 [0.75]
36	Pin, Cotter, .25" Dia. X 2.5" Long (Service Only)	XB-T-60	2	0.04 [0.02]
43A	Plate S/A, MTG	XA-6520-A	1	118.91 [53.94]
55	Washer (Special) 1.50" I.D. x 2.75" O.D. x .156" Thk	XA-T-56	2	0.18 [0.08]
56	Nut, Hex Slot 1-1/2"-6	XA-T-9N-2	2	0.50 [0.23]
57	Bolt, Bracket	XA-6004	2	2.34 [1.06]
60C	Bracket S/A	XA-6002	2	9.33 [4.23]

*Not sold individually - must be purchased in a kit.

XL-FW10081PM-en-US Rev D 2016-03-01 Amendments and errors reserved. © SAF-HOLLAND, Inc.

RK-63507
Complete Rebuild Kit (XA-1901-A)

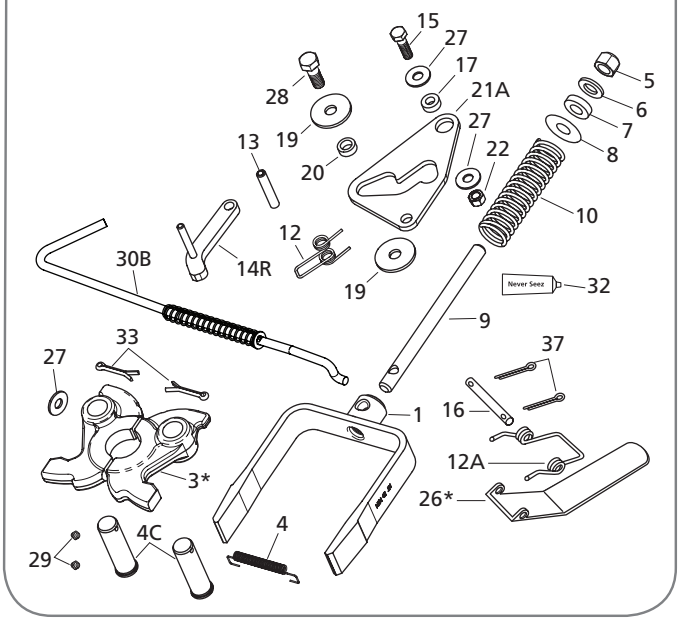

ITEM	DESCRIPTION	PART NUMBER	QTY.	WEIGHT LBS [KG]
1	Yoke	XA-07295-THK	1	5.87 [2.66]
3*	Lock Jaw Set	XA-01613	1	7.52 [3.41]
4	Spring, Extension	XB-GT-13-1	1	0.07 [0.03]
4C	Pin, Lock	XA-1313-C	2	1.08 [0.49]
5	Lock Nut, .75"-16 Gr C	XB-HNH-34-F	1	0.14 [0.06]
6	Washer, .81" I.D. x 1.47" O.D.	XB-PW-1316-112	1	0.04 [0.02]
7	Washer, Rubber, .75" I.D. x 1.50'' O.D.	XB-1127	1	0.03 [0.01]
8	Tag, Lock Adjustment	XB-02312	1	N/A
9	Shaft, Yoke	XA-1706-3	1	1.27 [0.58]
10	Spring, Compression	XB-1505	1	0.61 [0.28]
12	Spring, Torsion	XB-2149	1	0.06 [0.03]
12A	Spring, Torsion	XB-1044	1	0.10 [0.05]
13	Pin, Spring, .50" Diameter x 2.75" Long	XB-21-S-500-2750	1	0.02 [0.01]
14R	Lock, Manual Secondary, Right-Hand	XA-3542-R	1	0.67 [0.30]
15	HHCS, .50"-20 x 1.75" Gr 5 Zinc Plate, Nylock	XB-2083	1	0.13 [0.06]

ITEM	DESCRIPTION	PART NUMBER	QTY.	WEIGHT LBS [KG]
16	Pin, .50" Diameter x 4.50" Long	XA-1055	1	0.24 [0.11]
17	Roller, .52" I.D. x 1" O.D. x .38" Long	XA-1029	1	0.06 [0.03]
19	Washer, .66" I.D. x 2.25" O.D.	XB-1030-1	2	0.19 [0.09]
20	Roller, .66" I.D. x 1" O.D.r x .38" Long	XA-1507	1	0.05 [0.02]
21A	Cam Plate, Air Release	XA-1705	1	0.80 [0.36]
22	Lock Nut, .50"-20 Gr C, Cam Plates, Bracket Pins, Air Release	XB-T-69-A	1	0.04 [0.02]
26*	Lock Guard	XA-3514	1	0.89 [0.40]
28	HHCS, .63"-18 x 1.75" Gr 8	XB-CX-58-F-134	1	0.21 [0.10]
29	Fittings, Grease	XB-H-38	2	0.01 [0.005]
30B	Kit, Handle	RK-1707-2	1	1.77 [0.80]
32	Never-Seez, 7.5g Tube	XB-02967	1	N/A
33	Pin, Cotter, .25" Diameter x 2" Long	XB-5	2	0.05 [0.02]
37	Pin, Cotter, .13" Diameter x 1" Long	XB-16	2	0.01 [0.005]

*Not sold individually - must be purchased in a kit.

 Amendments and errors reserved. © SAF-HOLLAND, Inc.

FW1226 With Right or Left Hand Release Exploded View

SAF-HOLLAND Group



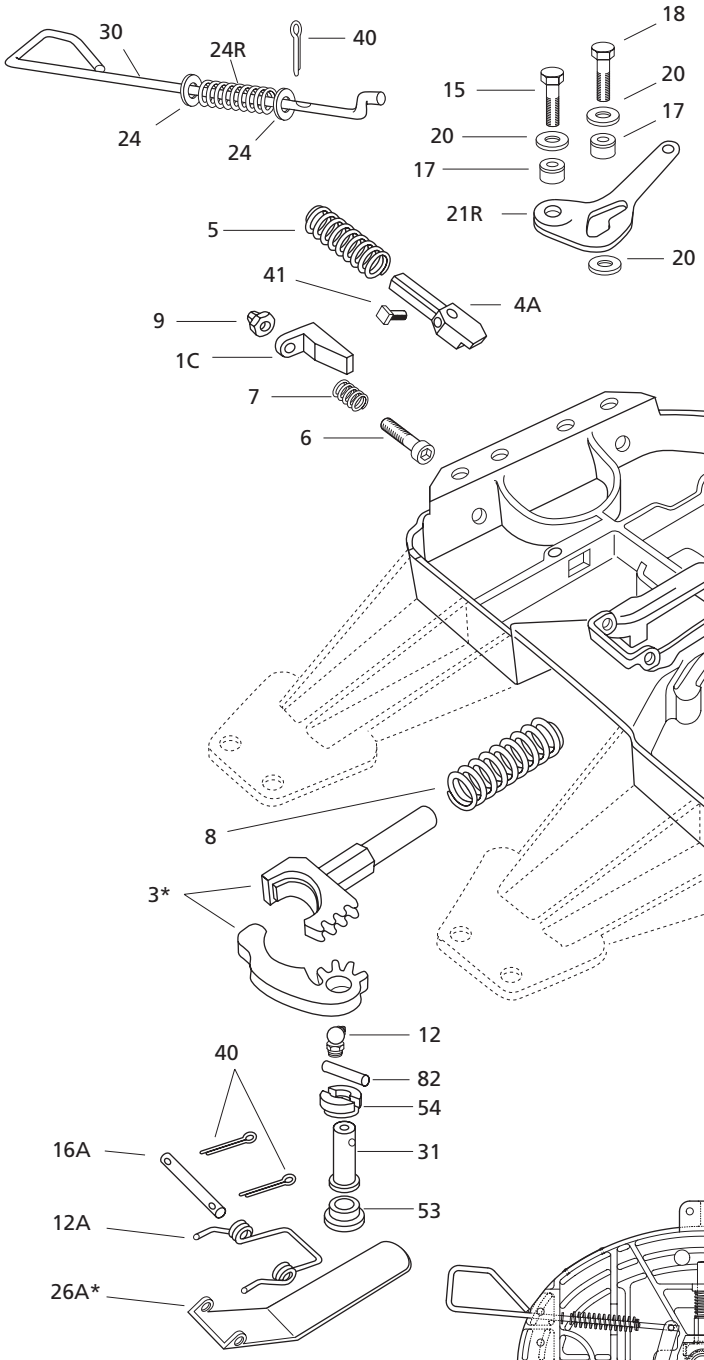

FOR LEFT HAND RELEASE

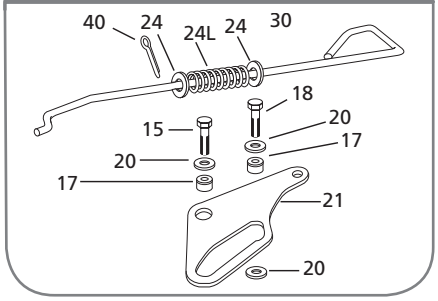

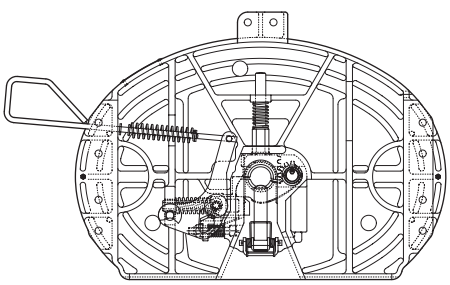

FW1226-0087 Option

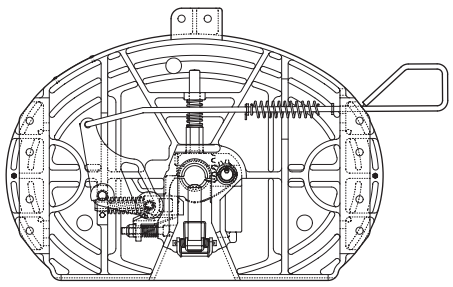

FW1226-0087-LH Option

NOTE: See Page 370 for Parts List

XL-FW10081PM-en-US Rev D 2016-03-01 Amendments and errors reserved. © SAF-HOLLAND, Inc.

FW1226 With Front or Left Hand Release Exploded View

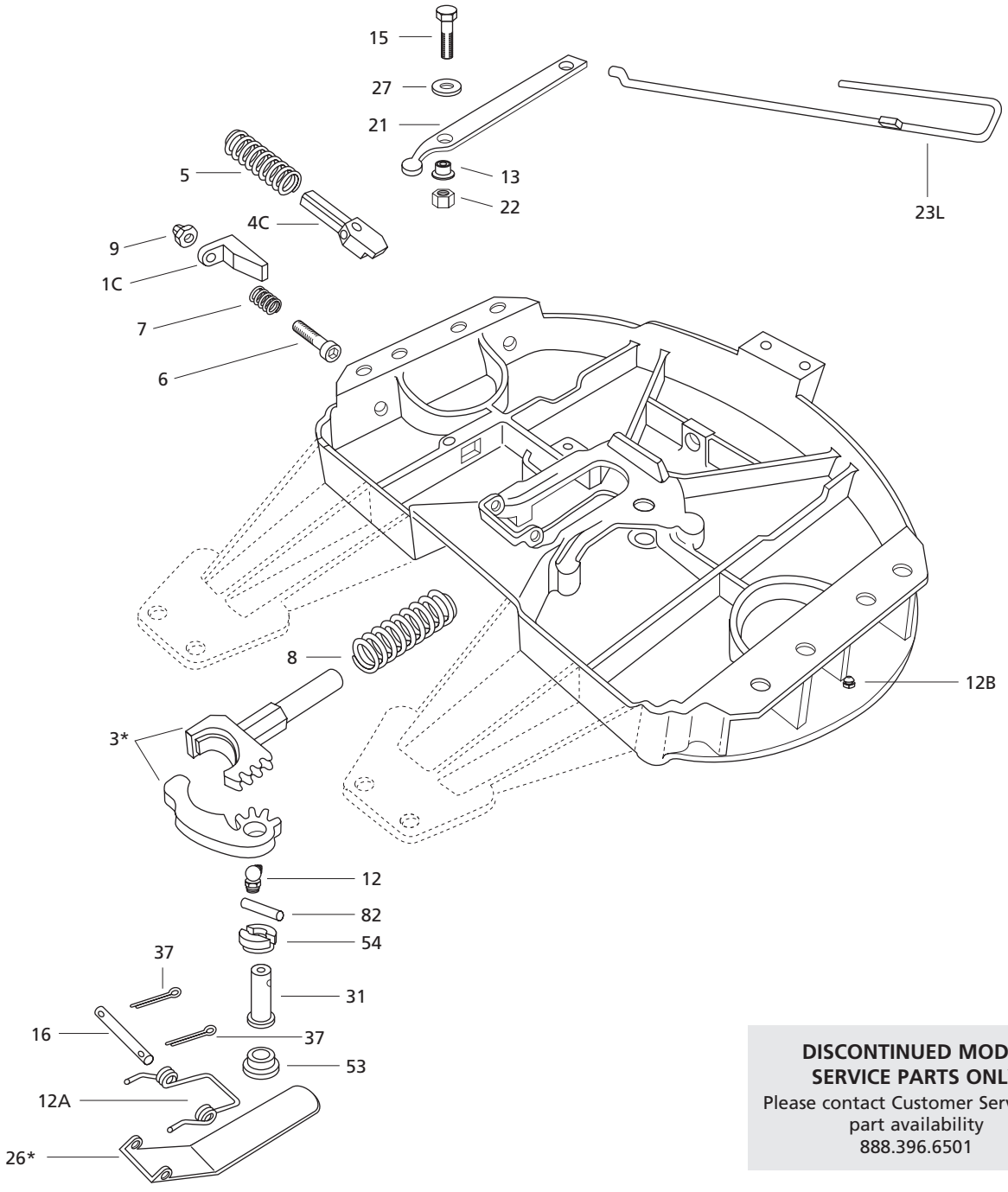

DISCONTINUED MODEL
SERVICE PARTS ONLY
Please contact Customer Service for part availability
888.396.6501

NOTE: See Page 370 for Parts List

 Amendments and errors reserved. © SAF-HOLLAND, Inc.

FW1226 With RIght, Front or Left Hand Release Parts List

SAF-HOLLAND Group

ITEM	DESCRIPTION	PART NUMBER	QTY.	WEIGHT LBS [KG]
1C	Wedge, Adjusting	XD-3123-1	1	1.18 [0.54]
3*	Set, Lock, See RK-62004	XA-1102	1	8.52 [3.86]
4A	Plunger, Locking	XA-1119	1	3.75 [1.70]
4C	Plunger	XA-1104	1	3.09 [1.40]
5	Spring, Plunger	XB-1007	1	0.32 [0.15]
6	SHCS, .63"-11 x 4.00" Long	XB-09407	1	0.40 [0.18]
7	Spring, Manual Release	XB-403	1	0.07 [0.03]
8	Spring, Lock	XB-1006	1	0.21 [0.10]
9	Nut, Lock, .63"-11	XB-09174	1	0.15 [0.07]
12	Lube Fitting (90°)	XB-0769	1	0.02 [0.01]
12A	Spring, Torsion	XB-1044	1	0.10 [0.05]
12B	Fitting, Lube	XB-03684	2	0.02 [0.01]
13	Nylon Bushing	XB-02949	1	0.01 [0.005]
15	HHCS, .50"-20 x 1.75" Gr 5 Zinc Plate, Nylock	XB-2083	1	0.13 [0.06]
16	Pin, .50" Diameter x 4.50" Long	XA-1055	1	0.24 [0.11]
16A	Pin, .50" Dia. x 4.12"	XA-06379	1	0.22 [0.10]
17	Roller, .52" I.D. x 1" O.D. x .38" Long	XA-1029	2	0.06 [0.03]
18	HHCS, .50"-20 x 2.00"	XB-1031	1	0.10 [0.05]
20	Washer, .50" I.D. x 2.25" O.D. (RIght Hand Release)	XB-1030	3	0.20 [0.09]
	Washer, .50" I.D. x 2.25" O.D. (Left Hand Release)		1	0.20 [0.09]
20D	Washer, .50" I.D. x 2.63" O.D.	XB-02846	2	0.28 [0.13]
21	Release Lever	XA-1005-FH	1	1.98 [0.90]
21L	Cam Plate, Left-Hand	XA-1118-2-L	1	2.60 [1.18]
21R	Cam Plate, Right-Hand	XA-1118-1	1	2.09 [0.95]
22	Lock Nut, .50"-20 Gr C, Cam Plates, Bracket Pins	XB-T-69-A	1	0.04 [0.02]
23L	Handle S/A, Release	XA-1117-UP	1	3.12 [1.42]
24	Washer, .53" I.D. x 1.06" O.D., Hardened	XB-06378	2	0.02 [0.01]
24L	Spring, Left Hand Manual Release	XB-03531	1	0.26 [0.12]
24R	Spring, Right Hand Manual Release	XB-1028	1	0.26 [0.12]
26*	Lock Guard, See RK-05328	XA-1621	1	0.53 [0.24]
26A	Guard S/A, Lock, See RK-05327	XA-02039	1	0.74 [0.34]
27	Washer, .56" I.D. x 1.38" O.D.	XB-T-49	1	0.04 [0.02]
30	Handle, Release	XA-0093	1	2.00 [0.91]
30L	Handle, Release	XA-07732	1	N/A
31	Pin, Manual Secondary Lock	XA-1016-C	1	0.92 [0.42]
37	Pin, Cotter, .13" Diameter x 1" Long	XB-16	2	0.01 [0.005]
40	Pin, Cotter, .13" Diameter x 1" Long	XB-06377	3	0.01 [0.005]
41	Screw, Set, .38"-16 x .75" Long	XB-15	1	0.03 [0.01]
53	Bushing	XA-278	1	0.27 [0.12]
54	Bushing	XA-279	1	0.37 [0.17]
82	Pin, Spring, .25" Diameter x 1.88" Long	XB-21-S-250-1875	1	0.02 [0.01]

*Not sold individually - must be purchased in a kit.

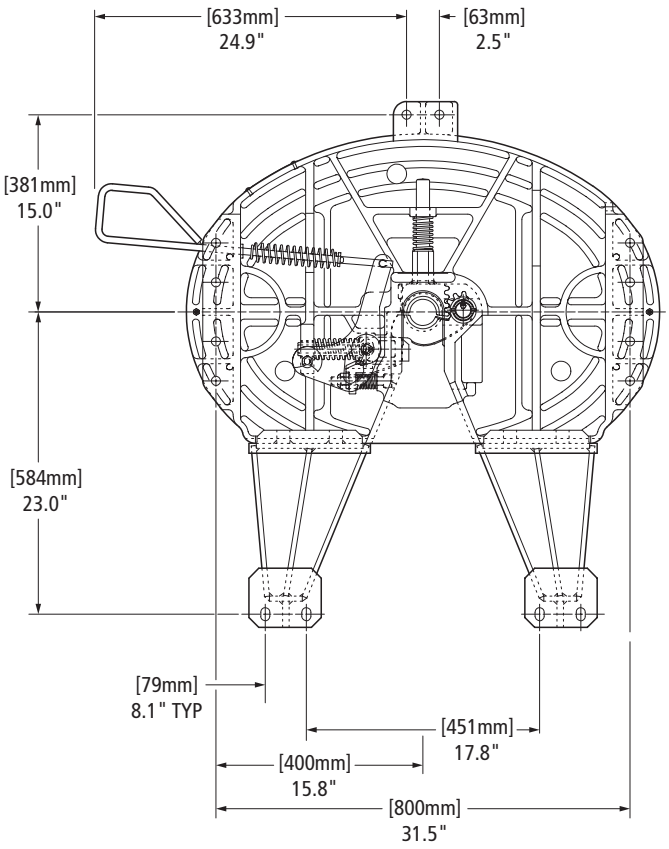

XL-FW10081PM-en-US Rev D 2016-03-01 Amendments and errors reserved. © SAF-HOLLAND, Inc.

THIS PAGE INTENTIONALLY LEFT BLANK

 Amendments and errors reserved. © SAF-HOLLAND, Inc.

RK-62005
Kit, Complete Rebuild

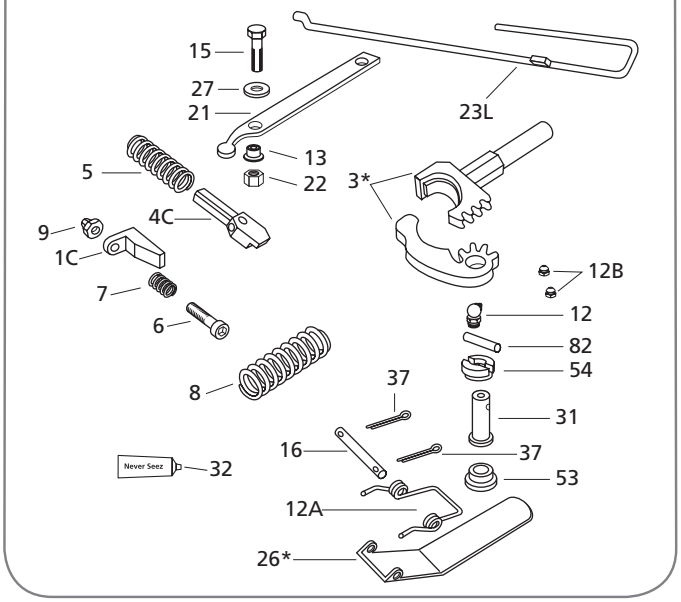

RK-62005-1
Kit, Complete Rebuild

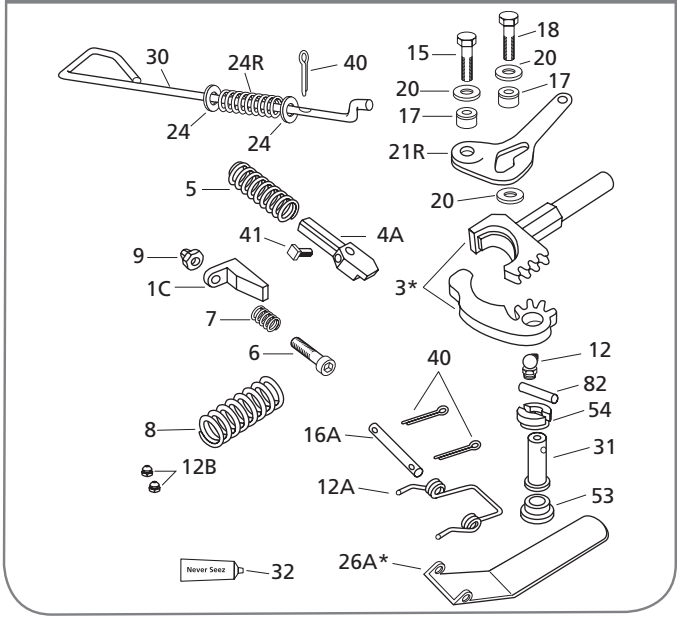

RK-62008
Kit, Complete Rebuild

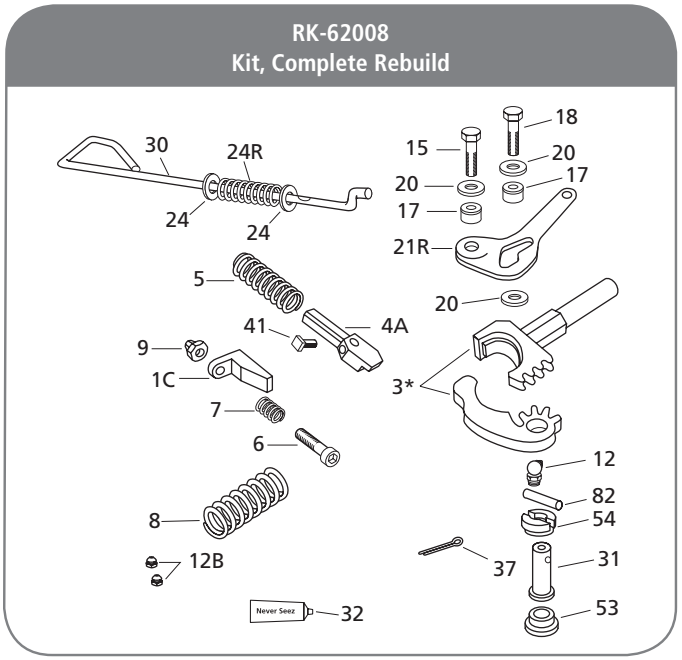

RK-1226-0087-LH
Kit, Complete Rebuild

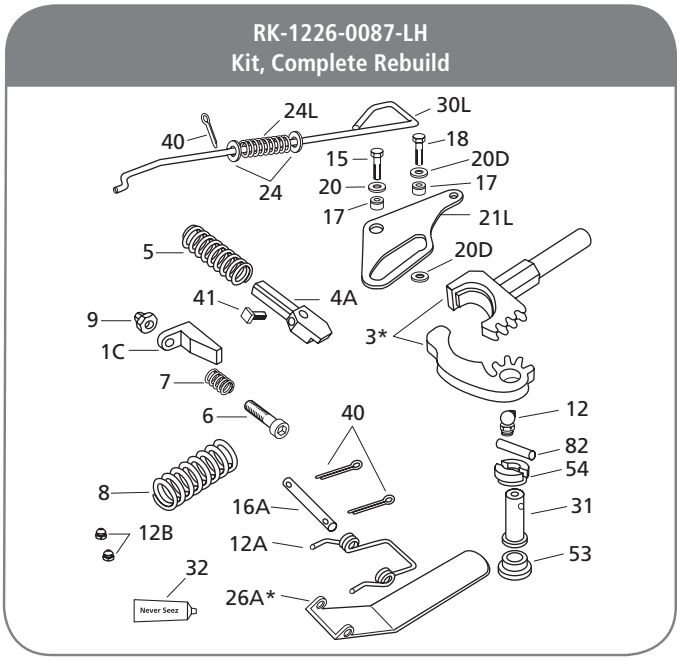

RK-05328
Kit, Lockguard

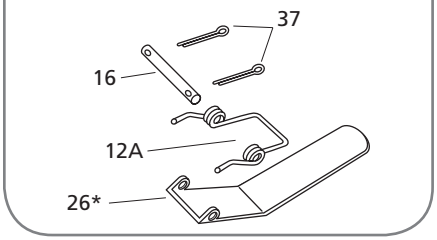

RK-62004
Kit, Lock

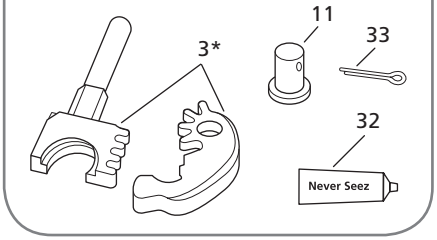

RK-05327
Kit, Lockguard

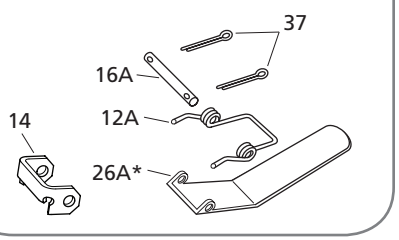

XL-FW10081PM-en-US Rev D 2016-03-01 Amendments and errors reserved. © SAF-HOLLAND, Inc.

ITEM	DESCRIPTION	PART NUMBER	QTY.	WEIGHT LBS [KG]
1C	Wedge, Adjusting	XD-3123-1	1	1.18 [0.54]
3*	Set, Lock, See RK-62004	XA-1102	1	8.52 [3.86]
4A	Plunger, Locking	XA-1119	1	3.75 [1.70]
4C	Plunger	XA-1104	1	3.09 [1.40]
5	Spring, Plunger	XB-1007	1	0.32 [0.15]
6	SHCS, .63"-11 x 4.00" Long	XB-09407	1	0.40 [0.18]
7	Spring, Manual Release	XB-403	1	0.07 [0.03]
8	Spring, Lock	XB-1006	1	0.21 [0.10]
9	Nut, Lock, .63"-11	XB-09174	1	0.15 [0.07]
11	Pin, Lock	XA-1016	1	0.94 [0.43]
12	Lube Fitting (90°)	XB-0769	1	0.02 [0.01]
12A	Spring, Torsion	XB-1044	1	0.10 [0.05]
12B	Fitting, Lube	XB-03684	2	0.02 [0.01]
13	Nylon Bushing	XB-02949	1	0.01 [0.005]
14	Bracket, Lockguard	XA-3601-31	1	0.35 [0.16]
15	HHCS, .50"-20 x 1.75" Gr 5 Zinc Plate, Nylock	XB-2083	1	0.13 [0.06]
16	Pin, .50" Diameter x 4.50" Long	XA-1055	1	0.24 [0.11]
16A	Pin, .50" Dia. x 4.12"	XA-06379	1	0.22 [0.10]
17	Roller, .52" I.D. x 1" O.D. x .38" Long	XA-1029	2	0.06 [0.03]
18	HHCS, .50"-20 x 2.00"	XB-1031	1	0.10 [0.05]
20	Washer, .50" I.D. x 2.25" O.D. (RK-1226-0087-LH)	XB-1030	1	0.20 [0.09]
	Washer, .50" I.D. x 2.25" O.D. (RK-62005-1, RK-62008)		3	0.20 [0.09]
20D	Washer, .50" I.D. x 2.63" O.D.	XB-02846	2	0.28 [0.13]
21	Release Lever	XA-1005-FH	1	1.98 [0.90]
21L	Cam Plate, Left-Hand	XA-1118-2-L	1	2.60 [1.18]
21R	Cam Plate, Right-Hand	XA-1118-1	1	2.09 [0.95]
22	Lock Nut, .50"-20 Gr C, Cam Plates, Bracket Pins , Air Release	XB-T-69-A	1	0.04 [0.02]
23L	Handle S/A, Release	XA-1117-UP	1	3.12 [1.42]
24	Washer, .53" I.D. x 1.06" O.D., Hardened	XB-06378	2	0.02 [0.01]
24L	Spring, Left Hand Manual Release	XB-03531	1	0.26 [0.12]
24R	Spring, Right Hand Manual Release	XB-1028	1	0.26 [0.12]
26*	Lock Guard, See RK-05328	XA-1621	1	0.53 [0.24]
26A*	Guard S/A, Lock, See RK-05327	XA-02039	1	0.74 [0.34]
27	Washer, .56" I.D. x 1.38" O.D., Manual Release	XB-T-49	1	0.04 [0.02]
30	Handle, Release	XA-0093	1	2.00 [0.91]
30L	Handle, Release	XA-07732	1	N/A
31	Pin, Manual Secondary Lock	XA-1016-C	1	0.92 [0.42]
32	Never-Seez, 7.5g Tube	XB-02967	1	N/A
33	Pin, Cotter, .25" Diameter x 2" Long	XB-5	1	0.05 [0.02]
37	Pin, Cotter, .13" Diameter x 1" Long (RK-62008)	XB-16	1	0.01 [0.005]
	Pin, Cotter, .13" Diameter x 1" Long (RK-62005, RK-05328)		2	0.01 [0.005]
40	Pin, Cotter, .13" Diameter x 1" Long	XB-06377	3	0.01 [0.005]
41	Screw, Set, .38"-16 x .75" Long	XB-15	1	0.03 [0.01]
53	Bushing	XA-278	1	0.27 [0.12]
54	Bushing	XA-279	1	0.37 [0.17]
82	Pin, Spring, .25" Diameter x 1.88" Long	XB-21-S-250-1875	1	0.02 [0.01]

*Not sold individually - must be purchased in a kit.

 Amendments and errors reserved. © SAF-HOLLAND, Inc.

Holland Fifth Wheel Kit 'Quick List'

SAF-HOLLAND Group

PRODUCT	TOP PLATE	COMPLETE REBUILD KIT	LOCK GUARD	JAW KIT	HANDLE KIT	BUSHING/PIN KIT	AIR CYLINDER
FW35	XA-351-A-L-P (LH)	RK-351-A-L (LH)	-	RK-351-07296	RK-08415-1	RK-10605 (ILS) RK-06973-1 (Traditional)	XA-2524-R
	XA-351-A-P (RH)	RK-351-A (RH)					
FW35-7401 (No-tilt)	XA-351-A-06-L-P	RK-351-A-L	-	-	RK-08415-1		XA-2524-R
FW33 Low Lube	XA-331-A-L-P (LH)	RK-351-A-L (LH)		RK-351-07296	RK-08415-1		
	XA-331-A-P (RH)	RK-351-A (RH)					
FW31 No Lube	XA-311-A-L-P (LH)	RK-311-A-L (LH)		RK-311-LK	RK-311-10344		
	XA-311-A-P (RH)	RK-311-A (RH)					
FWAL No Lube	XA-AL-A-L-P (LH)	RK-AL-A-L (LH)		RK-AL-11078	RK-10495-AL-P		
FWS1	XA-S1-A-L-P	RK-FWS-A-L		RK-4109939	-		
FW8	XA-201-A-L-P (LH)	RK-201-A3-L (LH)	-	-	-		XA-2524-R
	XA-201-A-P (RH)	RK-201-A3 (RH)					
FW17	XA-17-A-L-P	RK-17-A-L	-	RK-171-11078	RK-171-11079		XA-2524-R
FW16 Low Lube	XA-16-A-L-P	RK-161-A		RK-161-11078	RK-161-11493		
	XA-16-A-P						
FW3500 (Stationary)	XA-3501-A-LH (LH)	RK-63501 (LH)	RK-05329	RK-63503	RK-1707-M (LH)	RK-04413	-
	XA-3501-A-RH (RH)	RK-63500 (RH)			RK-1707-6 (RH)		
FW2535 (Sliding)	XA-3501-A-LH (LH)	RK-63501 (LH)	RK-05329	RK-63503	RK-1707-M (LH)	RK-04413	XA-2524-R
	XA-3501-A-RH (RH)	RK-63500 (RH)			RK-1707-6 (RH)		
FW2000 (Stationary)	XA-2009-A-LH (LH)	RK-62001 (LH)	RK-05328	RK-62004	RK-1117-1-L (LH)	RK-04413	-
	XA-2009-A-RH (RH)	RK-62000 (RH)			RK-1117-1 (RH)		
FW2500 (Sliding)	XA-2009-A-LH (LH)	RK-62001 (LH)	RK-05328	RK-62004	RK-1117-1-L (LH)	RK-04413	XA-2524-R
	XA-2009-A-RH (RH)	RK-62000 (RH)			RK-1117-1 (RH)		
FW2555 (Sliding)	XA-71-DAS	RK-65014	-	RK-65024	-	-	-
FW2570 (Heavy Duty Sliding)	XA-71-DAS	RK-65014	-	RK-65024	-	-	-
FW6700-16B (Air Elevating)	XA-3501-UB	RK-63502	-	RK-63504	-	-	-
FW67-16B (Air Elevating)	XA-351-UB-P	RK-351-UB	-	-	-	-	-
FW35-03344 (Yard Spotter)	XA-351-03505S	RK-351-03505	-	-	-	-	XA-2524-R-13-1
FW35-03344-1 (Yard Spotter)	XA-351-03505S	RK-351-03505	-	-	-	-	XA-2524-R-13-1
FW2870-03184 (Yard Spotter)	XA-2801-03185-1	-	-	RK-03185-1	-	-	XA-2524-R-4-1
FW1560 (Side Oscillating)	XA-1501-CA1S	RK-65005	-	-	-	-	-
FW0100-D (Heavy Duty (2" KP*)	XA-101-DAS	RK-65012	-	RK-65024	-	-	-
FW0100-0 (Heavy Duty (3.5" KP*)	XA-101-OAS	RK-65013	-	RK-65024-1	-	-	-
FW0070 (Heavy Duty (2" KP*)	XA-71-DAS	RK-65014	-	RK-65024	-	-	-
FW0070 (Heavy Duty (3.5" KP*)	XA-71-OAS	RK-65015	-	RK-65024-1	-	-	-
FW2800-X (Hydraulic Lift)	XA-2801-AX-1S	RK-65021	-	-	-	-	-
FW2900-X (Hydraulic Lift)	XA-2801-AX-1S	RK-65021	-	-	-	-	-
FW1580	-	XA-1581-A-1	RK-65006	-	-	-	-
FW2870-03184	-	XA-2801-03185-1S	RK-03185-1	-	-	-	XA-2524-R-4-1

(LH) Left Hand Release.
(RH) Right Hand Release
KP* Kingpin

The above chart does not represent all models or all available kits. Please refer to the detailed parts information for your specific model for additional information.

DISCONTINUED MODEL SERVICE PARTS ONLY
Please contact Customer Service for part availability
888.396.6501

XL-FW10081PM-en-US Rev D 2016-03-01 Amendments and errors reserved. © SAF-HOLLAND, Inc.

CURRENT SIMPLEX FIFTH WHEELS & SLIDERS								
ITEM NO.	FIFTH WHEEL MODEL	SIMPLEX SE	SIMPLEX SE TOUCHLOC	SIMPLEX II SE	SIMPLEX II SE TOUCHLOC	SIMPLEX II SE RH* (RIGHT-HAND)	SIMPLEX II RH (RIGHT-HAND)	SIMPLEX YARD TRACTOR (SPOTTER)
1	Fifth Wheel Sub-Assembly	10402727 10402720	10602720	4102727 4102720	9502720	11202720	11202700	4100129 4100219
2	Serial Number Prefix-	S1LS-	S1LT-	S2LS-	S2LT-	S2RS-	SR-	SA-
3	Replaced by Simplex Model	NA	NA	NA	NA	NA	II SE RH	NA
	KIT NAMES AND NUMBERS							
4	Handle Kit (Handle Part Number)	4000507 (4100382)	4000531 (4100420)	4000507 (4100382)	4000531 (4100420)	4000646 (4100448)	4000512 (4100441)	NA
5	Alternate Handle Kit (45° Chamfer) (Handle Part Number)	4000531 (4100420)	- NA	4000531 (4100420)	- NA	- NA	- NA	- NA
6	Jaw w/ Standard Pin	4000644	4000644	4000644	4000644	4000645	4000503	4000503
7	Jaw w/ Oversized Pin	NA	NA	NA	NA	NA	4000523	4000523
8	Jaw & Return Spring Retrofit	NA	NA	NA	NA	NA	4000540	NA
9	Kingpin Gauge (Jaw Adjustment Tool)	4000171	4000171	4000171	4000171	4000171	4000171	4000171
10	Lock	4000647	4000647	4000647	4000647	4000648	4000574	4000574
11	** Standard Pad: 0.38" Thickness	4000504	4000504	4000504	4000504	4000504	4000504	NA
12	** Large Pad: 0.42" Thickness	4000588	4000588	4000588	4000588	4000588	4000588	NA
13	** Small Pad: 0.33" Thickness	4000641	4000641	4000641	4000641	4000641	4000641	NA
14	** Simplex RH Pad: 0.58" Thickness	NA	NA	NA	NA	NA	NA	4000 505
15	** Castloc & Castloc II	NA	NA	NA	NA	NA	NA	NA
16	** 400C	NA	NA	NA	NA	NA	NA	NA
17	Pad, Standard: 0.38" Thickness	4000528	4000528	4000528	4000528	4000528	4000528	-
18	Pad, Large: 0.42" Thickness	4000587	4000587	4000587	4000587	4000587	4000587	NA
19	Pad, Small: 0.33" Thickness	4000640	4000640	4000640	4000640	4000640	4000640	NA
20	Pad, Simplex RH: 0.58" Thickness	NA	NA	NA	NA	NA	NA	4000529
21	TouchLoc Air Cylinder	NA	4000273	NA	4000273	NA	NA	4100304
22	Shims, Poly (Castloc Series)	NA	NA	NA	NA	NA	NA	NA
23	Shims, Steel - Weld to Bracket	NA	NA	NA	NA	NA	NA	NA
	BULK KITS - INDIVIDUAL PARTS (QUANTITY/KIT)							
24	Handle (5)	B4100382	NA	B4100382	NA	NA	B4100441	NA
25	Indicator (5) (10 for 400C)	B4101250	NA	B4101250	NA	B4100428	B4100428	NA
26	Handle (45° Chamfer) (5)	B4100420	B4100420	B4100420	B4100420	NA	NA	NA
27	Indicator (45° Chamfer) (5)	B4100294	B4100294	B4100294	B4100294	NA	NA	NA
28	Lock Spring (5)	B1200706	B1200706	B1200706	B1200706	B1200706	B1200706	B1200706
29	Jaw Return Spring (10)	B1200101	B1200101	B1200101	B1200101	B1200101	NA	NA
30	Poly Shoes (10)	B4100328	B4100328	B4100328	B4100328	B4100328	B4100328	NA
31	Steel Shoes (10)	NA	NA	NA	NA	NA	NA	B4109811
32	Pads, Standard, .38" (20)	B4100329	B4100329	B4100329	B4100329	B4100329	B4100329	NA
33	Pads, Large, .42" (20)	B4100376	B4100376	B4100376	B4100376	B4100376	B4100376	NA
34	Pads, Small, .33" (20)	B4100339	B4100339	B4100339	B4100339	B4100339	B4100339	NA
35	Pads, Simplex RH, .58" (20)	NA	NA	NA	NA	NA	NA	B4100358
36	Poly Shims (20)	NA	NA	NA	NA	NA	NA	NA
37	Steel Shims (20) - Weld to Bracket	-	NA	NA	NA	NA	NA	B4100655

	SLIDER MODEL	SE, TAPERLOC SE, TAPERLOC XL	TAPERLOC (4" INCREMENT)	INBOARD INTEGRAL
38	Serial Number Prefix-	TL2-	TL-	IBS-
	KIT NAMES AND NUMBERS			
39	Air Cylinder	4300228	4300162	4300610
40	Bolt-on Removable Stops	4300227***	4300209	4300226***
41	Slide Bracket Air 6.81"	4300298	4300165	4300596***
42	Slide Bracket Air 7.75"	4300299	4300166	4300597***
43	Slide Bracket Air 8.75"	4300300	4300167	4300598***
44	Slide Bracket Air 9.75"	NA	4300172	NA
45	Slide Bracket Manual 6.81"	NA	4300204	NA
46	Slide Bracket Manual 7.75"	NA	4300205	NA
47	Slide Bracket Manual 8.75"	NA	4300206	NA
48	Slide Bracket Manual 9.75"	NA	4300173	NA

DISCONTINUED MODEL SERVICE PARTS ONLY
Please contact Customer Service for part availability
888.396.6501

, Bracket connection; *, Check for availability; NA, not applicable.

 Amendments and errors reserved. © SAF-HOLLAND, Inc.

SIMPLEX DISCONTINUED FIFTH WHEELS										
ITEM NO.	FIFTH WHEEL MODEL	SIMPLEX LITE	SIMPLEX LITE TOUCHLOC	SIMPLEX LITE ROTARY	SIMPLEX LITE ROTARY TOUCHLOC	SIMPLEX II & SIMPLEX III	SIMPLEX IIR & SIMPLEX II & SIMPLEX III TOUCHLOC	SIMPLEX IIR & SIMPLEX IIIR ROTARY	SIMPLEX IIIR ROTARY TOUCHLOC	SIMPLEX RH (RIGHT-HAND)
1	Fifth Wheel Sub-Assembly	10402700	10602700	10802700	11002700	4102700	9502700	7102700	7502700	4102764
		10402707				4102707				4101414
										4101424
2	Serial Number Prefix	SLS-, LSLS-	SLS-, LSLS-	SLR	SLR-	SL-, LSL-, SRY-	SL-, LSL-, SRY-	SRL-, SRYL-	SRL-, SRYL-	SR-
3	Replaced by Simplex Model	SE	SE TouchLoc	SE	SE TouchLoc	II SE	II SE TouchLoc	II SE	II SE TouchLoc	II SE RH
	KIT NAMES AND NUMBERS									
4	Handle Kit	4000507	4000531	4000508	4000508	4000650	4000532	4000510	4000510	4000511
	(Handle Part Number)	(4100382)	(4100420)	(4100386)	(4100386)	(4100332)	(4100296)	(4100357)	(4100357)	(4100350)
5	Alternate Handle Kit (45 chamfer)	400531	-	-	-	4000509	-	-	-	-
	(Handle Part Number)	(4100420)	NA	NA	NA	(4100342)	NA	NA	NA	NA
6	Jaw w/ Standard Pin	4000501	4000501	4000501	4000501	4000501	4000501	4000501	4000501	4000503
7	Jaw w/ Oversize Pin	4000502	4000502	4000502	4000502	4000502	4000502	4000502	4000502	4000523
8	Jaw &˝Return Spring Retrofit	4000539	4000539	4000539	4000539	4000539	4000539	4000539	4000539	4000540
9	Kingpin Gauge (Jaw Adj. Tool)	4000171	4000171	4000171	4000171	4000171	4000171	4000171	4000171	4000171
10	Lock	4000570	4000570	4000578	4000578	4000572	4000572	4000576	4000576	4000574
11	* Standard pad: 0.38" thickness	4000504	4000504	4000504	4000504	4000504	4000504	4000504	4000504	NA
12	* Large pad: 0.42" thickness	4000588	4000588	4000588	4000588	4000588	4000588	4000588	4000588	NA
13	* Small Pad: 0.33" thickness	4000641	4000641	4000641	4000641	4000641	4000641	4000641	4000641	NA
14	* Simplex RH Pad: 0.58" thickness	NA	NA	NA	NA	NA	NA	NA	NA	4000505
15	* Castloc & Castloc II	NA	NA	NA	NA	NA	NA	NA	NA	NA
16	**400C	NA	NA	NA	NA	NA	NA	NA	NA	NA
17	Pad, Standard: 0.38" thickness)	4000528	4000528	4000528	4000528	4000528	4000528	4000528	4000528	NA
18	Pad, Large: 0.42" thickness	4000587	4000587	4000587	4000587	4000587	4000587	4000587	4000587	NA
19	Pad, Small: 0.33" thickness	4000640	4000640	4000640	4000640	4000640	4000640	4000640	NA	-
20	Pad, Simplex RH: 0.58" thickness	NA	NA	NA	NA	NA	NA	NA	NA	4000529
21	TouchLoc Air Cylinder	NA	4000273	NA	4000272	NA	4100269	NA	-	NA
22	Shims, Poly (Castloc Series)	NA	NA	NA	NA	NA	NA	NA	NA	NA
23	Shims, Steel - weld to bracket	NA	NA	NA	NA	NA	NA	NA	NA	NA
	BULK KITS - INDIVIDUAL PARTS (QUANTITY/KIT)									
24	Handle (5)	B4100382	NA	B4100386	B4100386	B4100332	NA	B4100357	B4100357	B4100350
25	Indicator (5) (10 for 400C)	B4101250	NA	B4100374	B4100374	B4101250	NA	B4100150	B4100150	B4100428
26	Handle (45° Chamfer) (5)	-	B4100420	B4100420	NA	NA	B4100342	B4100296	NA	NA
27	Indicator (45° Chamfer) (5)	-	B4100294	B4100294	NA	NA	B4100294	B4100294	NA	NA
28	Lock Spring (5)	B1200706	B1200706	B1200706	B1200706	B1200706	B1200706	B1200706	B1200706	B1200706
29	Jaw Return Spring (10)	NA	NA	NA	NA	NA	NA	NA	NA	NA
30	Poly Shoes (10)	B4100328	B4100328	B4100328	B4100328	B4100328	B4100328	B4100328	B4100328	NA
31	Steel Shoes (10)	NA	NA	NA	NA	NA	NA	NA	NA	B4109811
32	Pads, Standard, .38" (20)	B4100329	B4100329	B4100329	B4100329	B4100329	B4100329	B4100329	B4100329	NA
33	Pads, Large, .42" (20)	B4100376	B4100376	B4100376	B4100376	B4100376	B4100376	B4100376	B4100376	NA
34	Pads, Small, .33" (20)	B4100339	B4100339	B4100339	B4100339	B4100339	B4100339	B4100339	B4100339	NA
35	Pads, Simplex RH, .58" (20)	NA	NA	NA	NA	NA	NA	NA	NA	B4100358
36	Poly Shims (20)	NA	NA	NA	NA	NA	NA	NA	NA	NA
37	Steel Shims (20) - weld to bracket	NA	NA	NA	NA	NA	NA	NA	NA	NA

continued on next page

XL-FW10081PM-en-US Rev D 2016-03-01 Amendments and errors reserved. © SAF-HOLLAND, Inc.

Kits for Discontinued Simplex Fifth Wheels con't.

CASTLOC & 400C DISCONTINUED FIFTH WHEELS						
ITEM NO.	FIFTH WHEEL MODEL	CASTLOC II & CASTLOC III	CASTLOC II & CASTLOC III TOUCHLOC	CASTLOC ROTARY	CASTLOC ROTARY TOUCHLOC	400C
1	Fifth Wheel Sub-Assembly	A7202700 7202700A	A7602700 7602700A	7202700	7602700	4102846
2	Serial Number Prefix-	CA-, CR-, CV-	CA-, CR-, CV-	CL-	CL-	AL-
3	Replaced by Simplex Model	II SE	II SE TouchLoc	II SE	II SE TouchLoc	II SE
	KIT NAMES AND NUMBERS					
4	Handle Kit	4000650	4000532	4000510	4000510	4000632
	(Handle Part Number)	(4100332)	(4100296)	(4100357)	(4100357)	(4109944)
5	Alternate Handle Kit (45° Chamfer)					
	(Handle Part Number)	NA	NA	NA	NA	NA
6	Jaw w/ Standard Pin	4000501	4000501	4000501	4000501	4000178
7	Jaw w/ Oversized Pin	4000502	4000502	4000502	4000502	NA
8	Jaw & Return Spring Retrofit	4000539	4000539	4000539	4000539	NA
9	Kingpin Gauge (Jaw Adjustment Tool)	4000171	4000171	4000171	4000171	NA
10	Lock	4000572	4000572	4000576	4000576	NA
11	* Standard Pad: 0.38" Thickness	NA	NA	NA	NA	NA
12	* Large Pad: 0.42" Thickness	NA	NA	NA	NA	NA
13	* Small Pad: 0.33" Thickness	NA	NA	NA	NA	NA
14	* Simplex RH Pad: 0.58" Thickness	NA	NA	NA	NA	NA
15	* Castloc & Castloc II	4000506	4000506	4000506	4000506	NA
16	**400C	NA	NA	NA	NA	4000195
17	Pad, Standard: 0.38" Thickness	NA	NA	NA	NA	-
18	Pad, Large: 0.42" Thickness	NA	NA	NA	NA	NA
19	Pad, Small: 0.33" Thickness	NA	NA	NA	NA	NA
20	Pad, Simplex RH: 0.58" Thickness	NA	NA	NA	NA	NA
21	TouchLoc Air Cylinder	NA	4100269	NA	4100258	NA
22	Shims, Poly (Castloc Series)	4000530	4000530	4000530	4000530	NA
23	Shims, Steel - Weld to Bracket	4000630	4000630	4000630	4000630	4000630
	BULK KITS - INDIVIDUAL PARTS (QUANTITY/KIT)					
24	Handle (5)	B4100332	B4100296	B4100357	B4100357	NA
25	Indicator (5) (10 for 400C)	B4101250	B4100294	B4100150	B4100150	B4109948
26	Handle (45° Chamfer) (5)	NA	NA	NA	NA	NA
27	Indicator (45° Chamfer) (5)	NA	NA	NA	NA	NA
28	Lock Spring (5)	B1200706	B1200706	B1200706	B1200706	NA
29	Jaw Return Spring (10)	NA	NA	NA	NA	NA
30	Poly Shoes (10)	NA	NA	NA	NA	NA
31	Steel Shoes (10)	NA	NA	NA	NA	NA
32	Pads, Standard, .38" (20)	NA	NA	NA	NA	NA
33	Pads, Large, .42" (20)	NA	NA	NA	NA	NA
34	Pads, Small, .33" (20)	NA	NA	NA	NA	NA
35	Pads, Simplex RH, .58" (20)	NA	NA	NA	NA	NA
36	Poly Shims (20)	B4000263	B4000263	B4000263	B4000263	NA
37	Steel Shims (20) - Weld to Bracket	B4100655	B4100655	B4100655	B4100655	B4100655

 Amendments and errors reserved. © SAF-HOLLAND, Inc.

DISCONTINUED MODEL SERVICE PARTS ONLY
Please contact Customer Service for part availability
888.396.6501

XA-2524-R-12

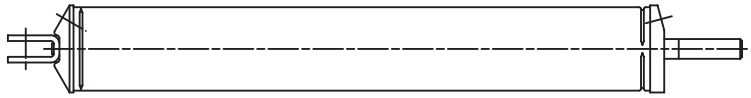

XA-2524-R1

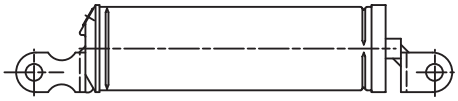

XA-2524-R

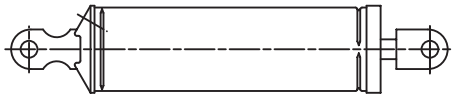

XA-2524-R-2

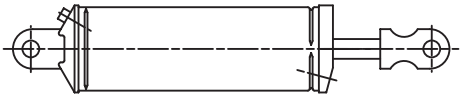

BLIND END

XA-2524-R-13-2

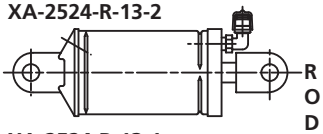

ROD END

XA-2524-R-13-1

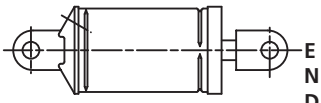

XA-2524-R-13-3

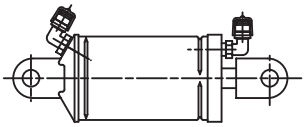

XA-2524-R-13-X

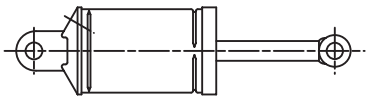

XA-2760-R-1

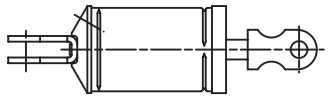

Additional Air Cylinders may be available. Contact SAF-HOLLAND Customer Service for more information.

XA-2524-R-4-3

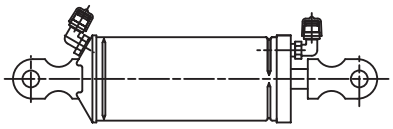

XA-2524-R-4-2

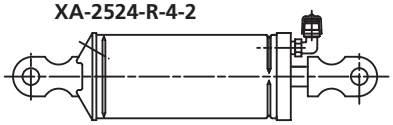

XA-2524-R-4-1

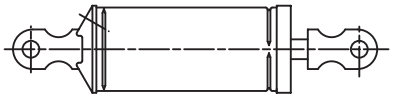

BLIND END

XA-2524-R-15-L

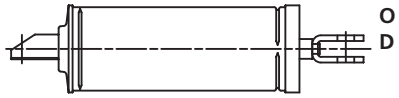

ROD END

XA-2524-R-15-R

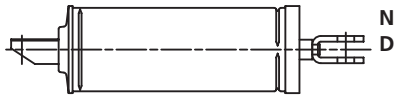

XA-2524-R-16-L

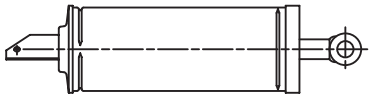

XA-2524-07237

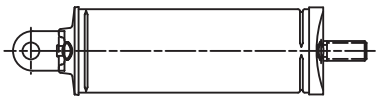

XA-2524-07237-1

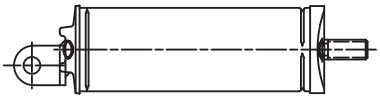

HOLLAND PART NO.	HOLE-TO-HOLE DIM. EXTENDED MAX	HOLE-TO-HOLE DIM. EXTENDED MIN	HOLE-TO-HOLE DIM. RETRACTED MAX	HOLE-TO-HOLE DIM. RETRACTED MIN	STROKE REF	AIR INLET	USED ON
XA-2524-R-13-2	9.649" [245]	9.464" [240]	7.613" [193]	7.473" [190]	2.02" [51]	Blind End	FW1500, FW3500
XA-2524-R-13-3	9.649" [245]	9.464" [240]	7.613" [193]	7.473" [190]	2.02" [51]	Blind End	FW1500, FW3500
XA-2524-R-12	38.742" [984]	38.556" [979]	22.680" [576]	22.496" [571]	16.06" [408]	Both Ends	TF-675
XA-2524-R	19.650" [499]	19.171" [487]	12.750" [324]	12.506" [318]	6.77" [172]	Blind End	Sliding 5th Wheels
XA-2524-R-2	18.560" [471]	18.171" [462]	12.750" [324]	12.506" [318]	5.74" [146]	Rod End	FW0070, FW0100, & FW2080
XA-2524-R-4-3	14.108" [358]	13.863" [352]	10.452" [265]	10.252" [260]	3.64" [92]	Blind End	XA-2801-03185-4
XA-2524-R-4-2	14.108" [358]	13.863" [352]	10.452" [265]	10.252" 260]	3.64" [92]	Blind End	XA-2801-03185-3
XA-2524-R-4-1	14.108" [358]	13.863" [352]	10.452" [265]	10.252" [260]	3.64" [92]	Blind End	FW1560 Series
XA-2524-R-13-X	11.690" [297]	11.280" [287]	9.570" [243]	9.385" [238]	1.99" [51]	Blind End	FW2800 Series, FW2900
XA-2760-R-1	10.840" [275]	10.361" [263]	8.720"[221]	8.476" [215]	1.99" [51]	Blind End	FW1580
XA-2524-R-13-1	9.649" [245]	9.464" [240]	7.613" [193]	7.473" [190]	2.02" [51]	Blind End	FW1500, FW3500
XA-2524-R-16-L	13.95" [354] REF		9.05" [230] REF		4.89" [124]	Blind End	OPT. CODE 80
XA-2524-R-15-R	13.95" [354] REF		9.05" [230] REF		4.89" [124]	Blind End	XA-3501-06533
XA-2524-R-15-L	13.95" [354] REF		9.05" [230] REF		4.89" [124]	Blind End	XA-3501-06533
XA-2524-07237-1	15.782" [401]	15.598" [396]	10.625" [270]	10.468" [266]	5.13" [130]	Both Ends	FW503 (Obsolete)
XA-2524-07237	15.782" [401]	15.598" [396]	10.625"[270]	10.468" [266]	5.13" [130]kher	Both Ends	FW503 (Obsolete)
XA-2524-R1	19.650" [499]	19.171" [487]	12.750" [324]	12.506"[318]	6.77" [172]	Blind End	Warranty

XL-FW10081PM-en-US Rev D 2016-03-01 Amendments and errors reserved. © SAF-HOLLAND, Inc.

DISCONTINUED MODEL SERVICE PARTS ONLY
Please contact Customer Service for part availability
888.396.6501

Illustrations shown at 90% of actual size

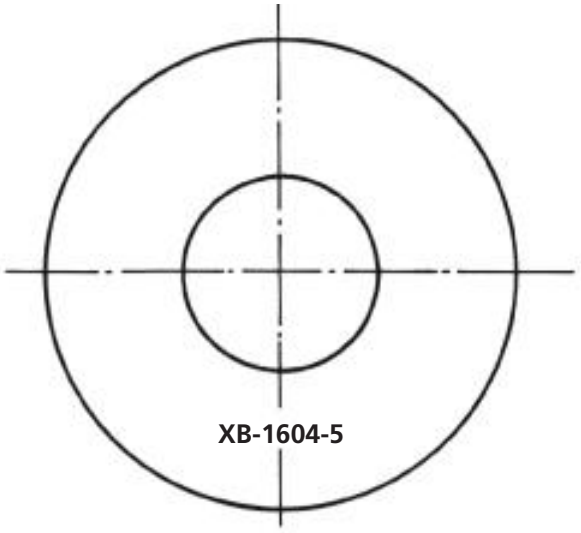

FW2000
FW3500
FW3600

OLD STYLE
Mfg. prior to May, 1982

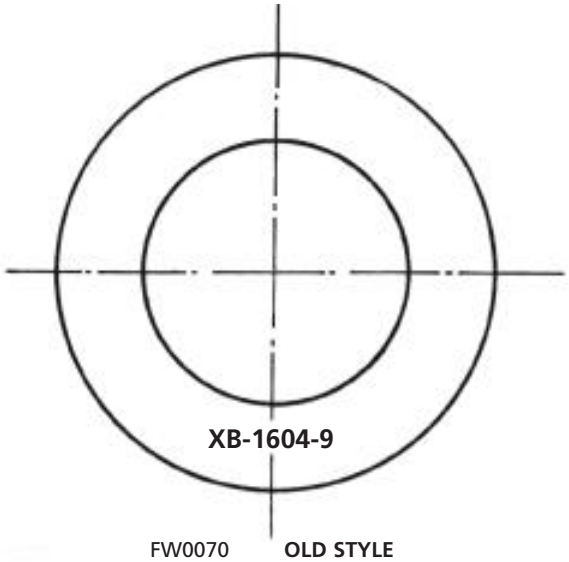

FW0070

OLD STYLE
Mfg. prior to May, 1982

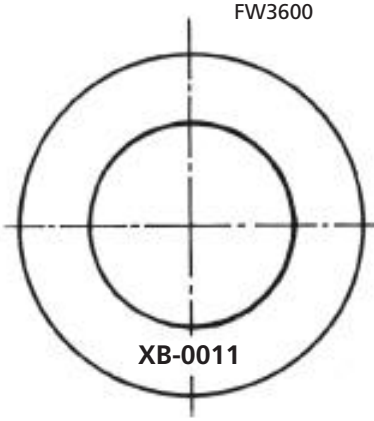

FW2000 KOMPENSATOR
FW3500 KOMPENSATOR
FW3600 KOMPENSATOR
FW3501-UB

CURRENT

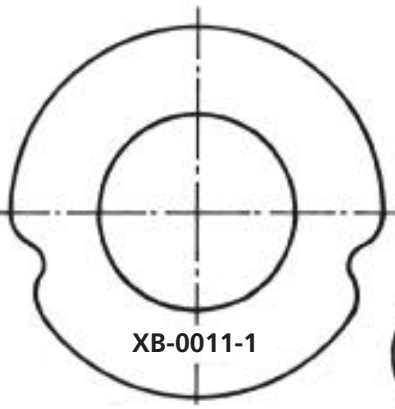

FW2000
FW3500
FW3600

Mfg. May, 1982 - June, 1987

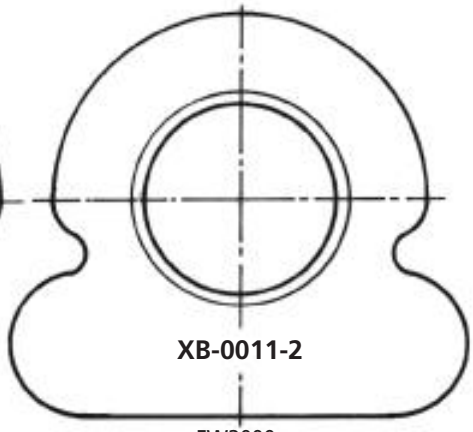

FW2000
FW3500
FW3600

CURRENT

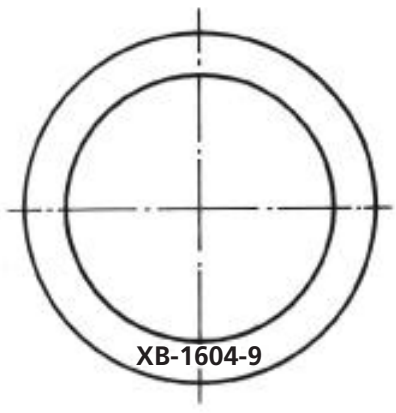

FW0070 KOMPENSATOR
Mfg. Prior to May 1982

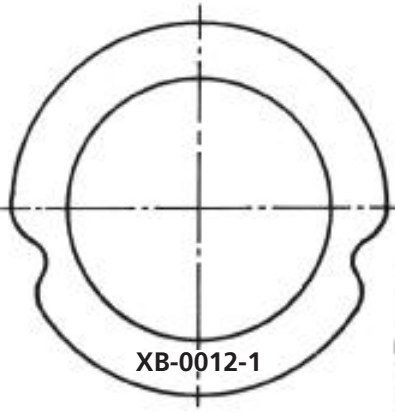

FW0070
Mfg. May, 1982 - Oct. 1987

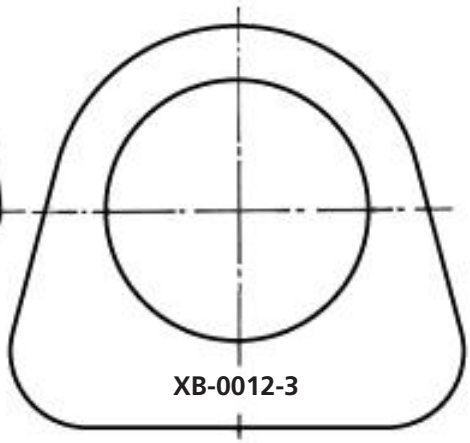

FW0070
CURRENT

 Amendments and errors reserved. © SAF-HOLLAND, Inc.

pod® parts on demand

QUICK & EASY PARTS ONLINE

SEARCH

Parts Knowledge at the Tip of Your Finger

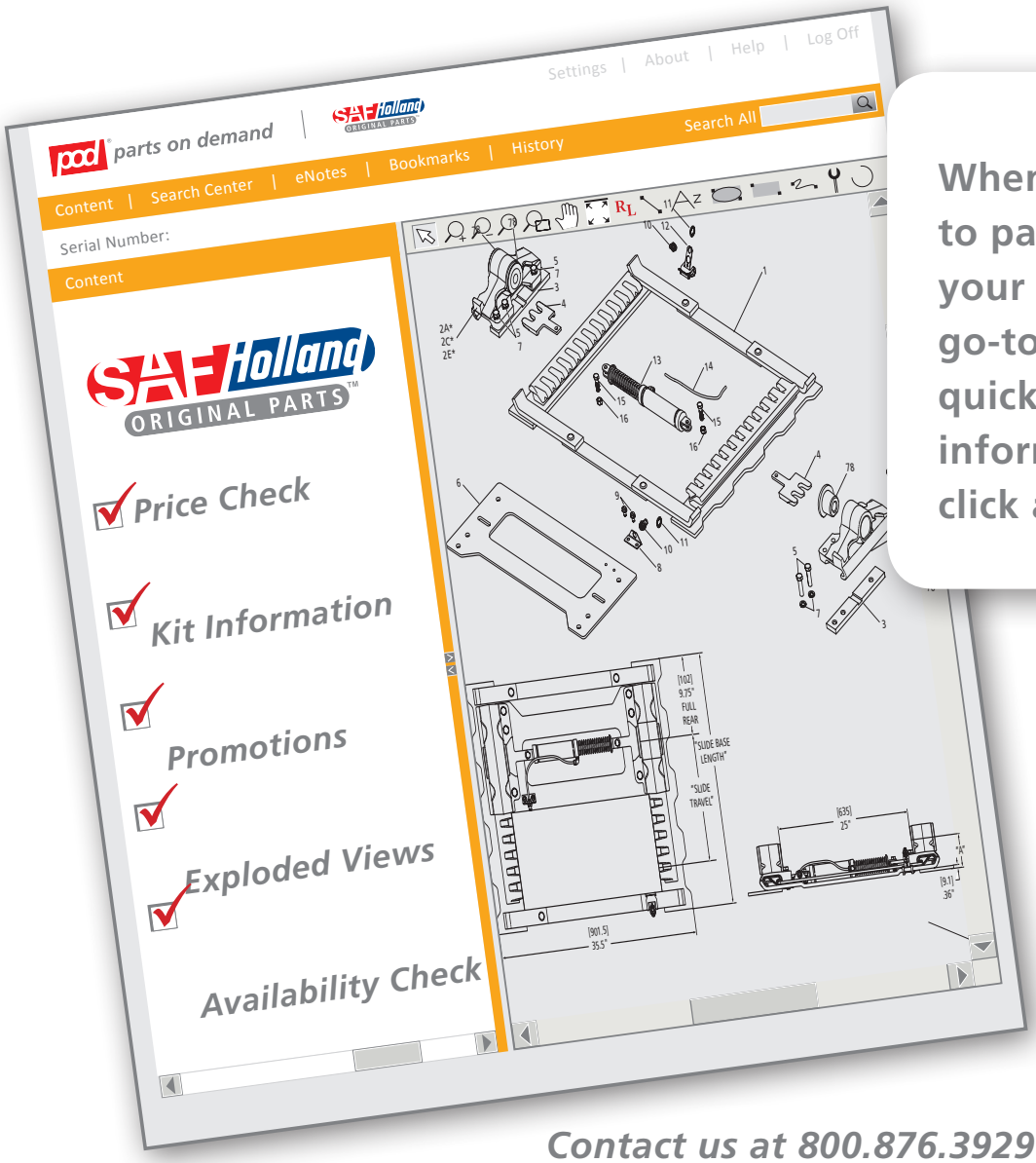

When it comes to parts, become your customers' go-to source with quick and accurate information just a click away.

SAF Holland

Holland

NEWAY

Contact us at 800.876.3929 to learn more

www.safholland.us

SAF Holland ORIGINAL PARTS™

Holland®
SAF-HOLLAND Group

BRACKETS AND SLIDE BASES



SAF Holland
ORIGINAL PARTS™

Cast Bracket

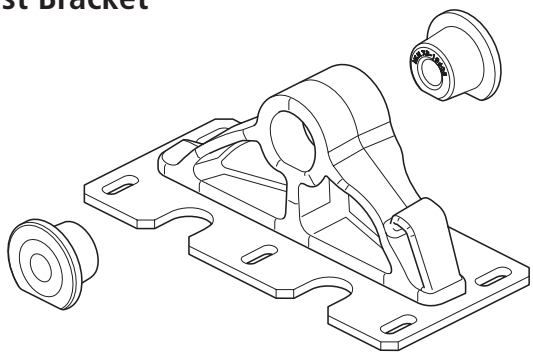

If replacing Bushings, order XB-10605 (Qty 4)

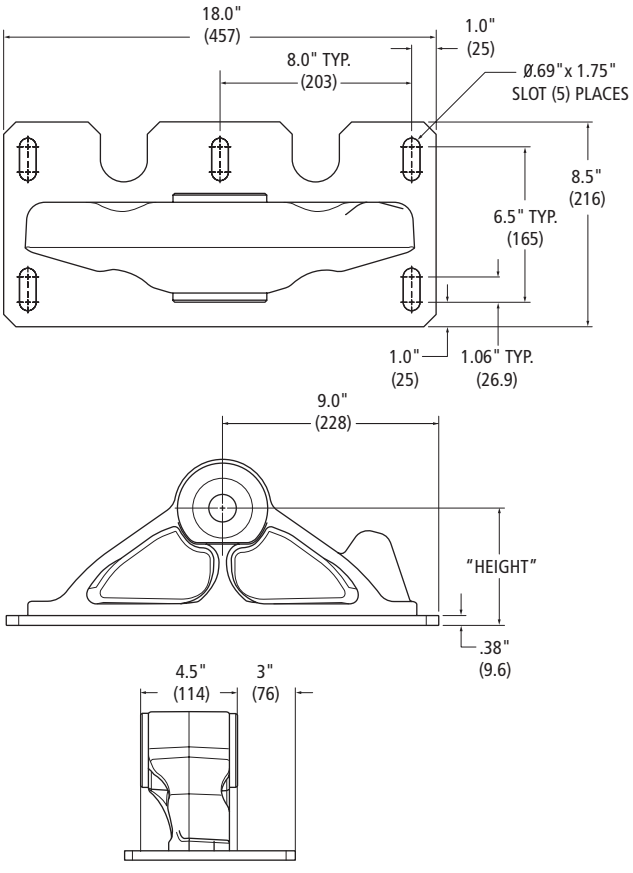

Fabricated Bracket

No longer available, replaced by cast version

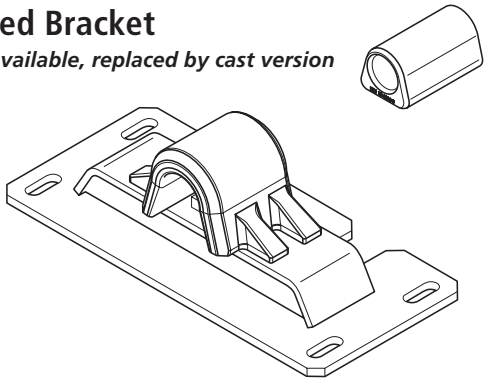

If replacing Bushings, order XB-0011-2 (Qty 2)

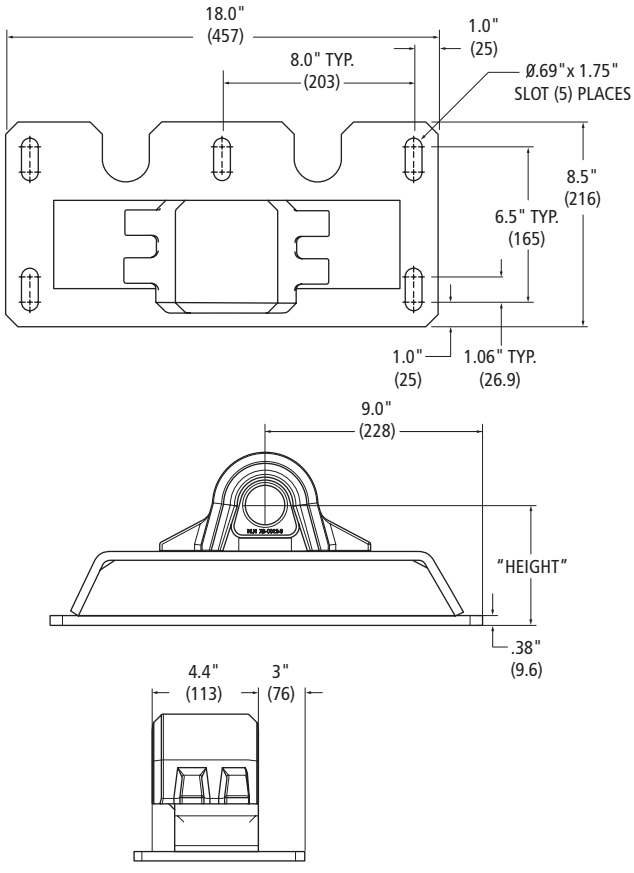

Note: The Stationary Fabricated Bracket was replaced by the Cast Stationary Bracket. See Chart on next page for Cross Reference.

XL-FW10081PM-en-US Rev D 2016-03-01 Amendments and errors reserved. © SAF-HOLLAND, Inc.

FW * * Y * 00 X * * *

Mounting Base Y-= Foot Mount	Mounting Height	Angles	L= Left R= Right	Options 00= Stationary

Example: FW35Y600XL00

**AVAILABLE TOP PLATES	
FW35	FW16
FW3500	FWAL
FW31	FW83
FW33	FW2000
FW17	FWS1

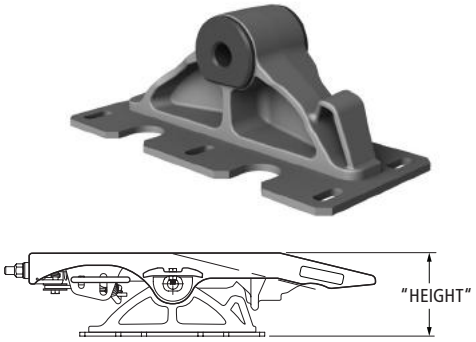

Height is measured from Face of Top Plate to Frame Rail

FW PART NUMBER (CAST BRACKET)◊	FW PART NUMBER (FABRICATED BRACKET)*◊	HEIGHT	BRACKET REPLACEMENT KIT ◊	BRACKET KIT WEIGHT LBS [KG]
FW**Y600XL__	FW**-7804XL__	2.88"	RK-Y600	71.00 [32.21]
FW**Y700XL__	FW**-7803XL__	3.88"	RK-Y700	76.00 [34.47]
FW**Y800XL__	FW**-7802XL__	4.88"	RK-Y800	81.00 [36.74]
FW**Y900XL__	FW**-7801XL__	5.88"	RK-Y900	86.00 [39.01]

 Amendments and errors reserved. © SAF-HOLLAND, Inc.

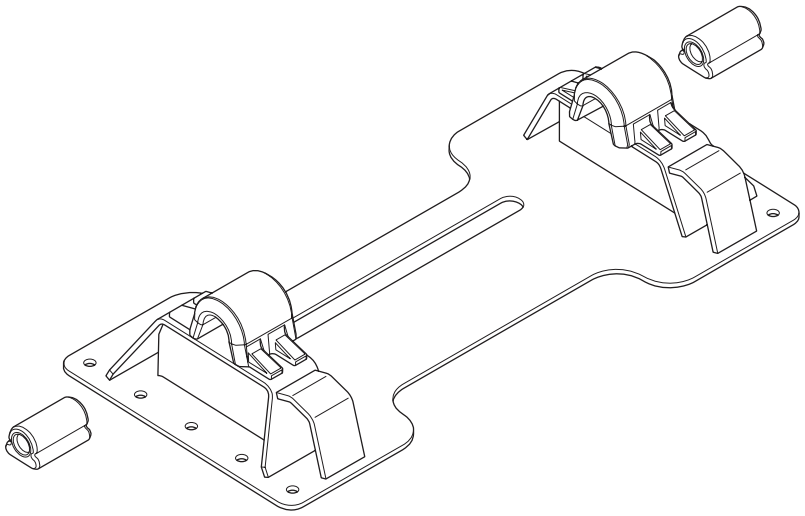

If replacing Bushings, order XB-0011-2 (Qty 2)

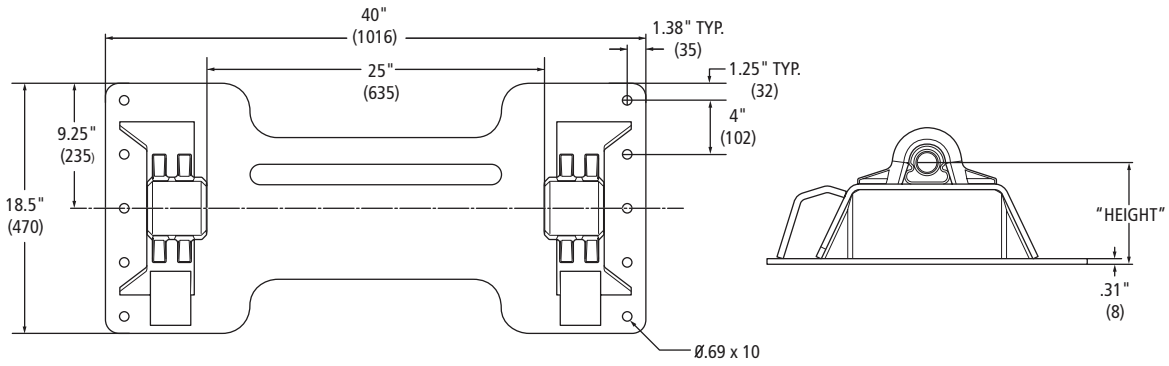

Note: The Stationary Fabricated Bracket was replaced by the Cast Stationary Bracket. See Chart on next page for Cross Reference.

XL-FW10081PM-en-US Rev D 2016-03-01 Amendments and errors reserved. © SAF-HOLLAND, Inc.

FW ** Z * 00 X * **

Mounting Base Z=Integrated Plate	Mounting Height	Angles	L= Left R= Right	Options 00= Stationary

Example: FW35Z600XL00

**AVAILABLE TOP PLATES	
FW35	FW16
FW3500	FWAL
FW31	FW83
FW33	FW2000
FW17	FWS1

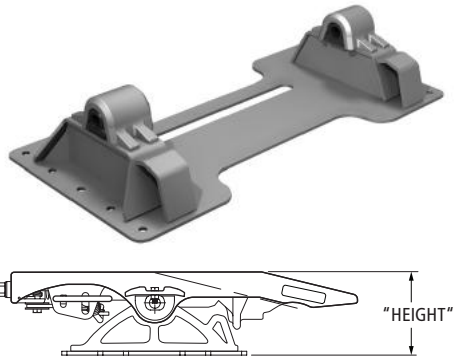

Height is measured from Face of Top Plate to Frame Rail

FW PART NUMBER◊	LEGACY FW PART NUMBER *◊	HEIGHT	BRACKET REPLACEMENT KIT◊	BRACKET KIT WEIGHT LBS [KG]
FW**Z600XL__	FW**-7886XL__	2.88"	RK-Z600	87.00 [39.46]
FW**Z700XL__	FW**-7885XL__	3.88"	RK-Z700	94.00 [42.64]
FW**Z800XL__	FW**-7884XL__	4.88"	RK-Z800	101.00 [45.81]
FW**Z900XL__	FW**-7883XL__	5.88"	RK-Z900	98.00 [44.45]

◊ For right-hand release fifth wheels, change "L" to "R" in part number.
* No Longer Available

 Amendments and errors reserved. © SAF-HOLLAND, Inc.

Cast Bracket

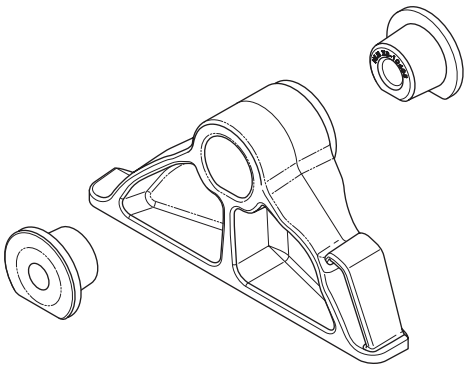

If replacing Bushings, order XB-10605 (Qty 4)

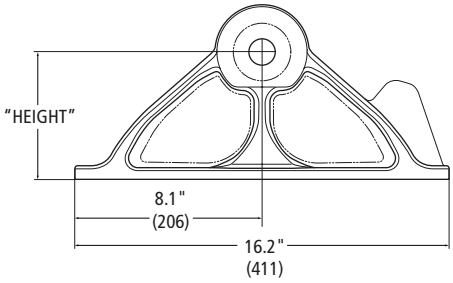

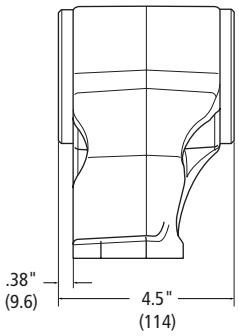

Fabricated Bracket

No longer available, replaced by cast version

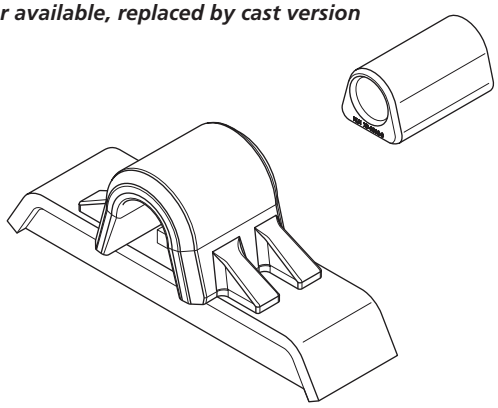

If replacing Bushings, order XB-0011-2 (Qty 2)

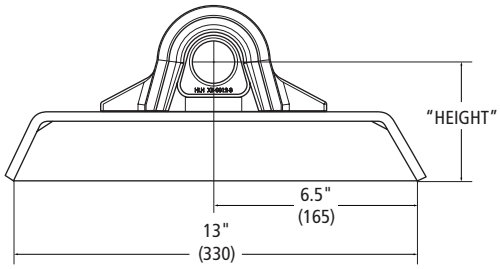

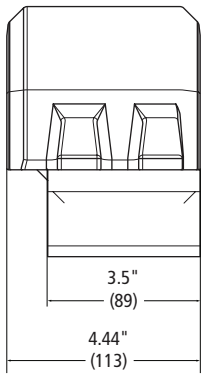

Note: The Stationary Fabricated Bracket was replaced by the Cast Stationary Bracket. See Chart on next page for Cross Reference.

XL-FW10081PM-en-US Rev D 2016-03-01 Amendments and errors reserved. © SAF-HOLLAND, Inc.

FW ** X * 00 X * **

Mounting Base X= Bracket for Angle	Mounting Height	Angles	L= Left R= Right	Options 00= Stationary

Example: FW35X600XL00

**AVAILABLE TOP PLATES	
FW35	FW16
FW3500	FWAL
FW31	FW83
FW33	FW2000
FW17	FWS1



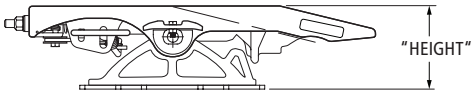

Height is measured from Face of Top Plate to Frame Rail

REF. FW PART NUMBER (CAST BRACKET)◊	REF. FW PART NUMBER (FABRICATED BRACKET)*◊	HEIGHT	BRACKET REPLACEMENT KIT◊	BRACKET KIT WEIGHT LBS [KG]
FW**X600XL__	FW**-7824XL__	2.50"	RK-X600	41.00 [18.60]
FW**X700XL__	FW**-7823XL__	3.50"	RK-X700	47.00 [21.32]
FW**X800XL__	FW**-7822XL__	4.50"	RK-X800	52.00 [23.59]
FW**X900XL__	FW**-7821XL__	5.50"	RK-X900	57.00 [25.85]

◊ For right-hand release fifth wheels, change "L" to "R" in part number.
* No Longer Available

 Amendments and errors reserved. © SAF-HOLLAND, Inc.

SAF-HOLLAND Group

Cast Bracket

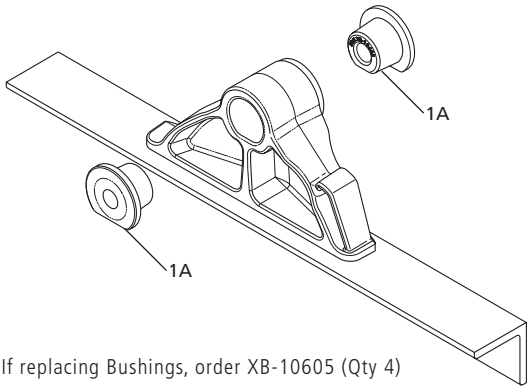

If replacing Bushings, order XB-10605 (Qty 4)

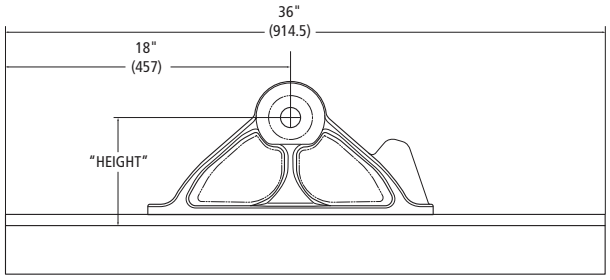

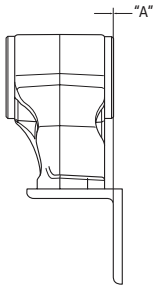

Fabricated Bracket

No Longer Available, Replaced by Cast Version.

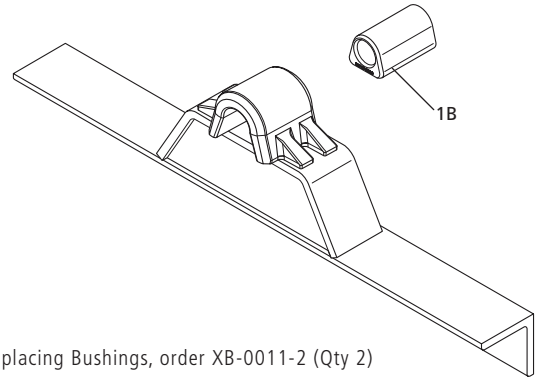

If replacing Bushings, order XB-0011-2 (Qty 2)

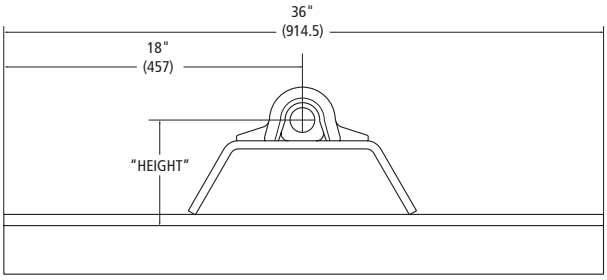

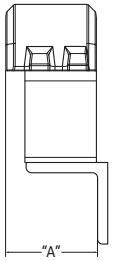

FRAME CODE FOR "W" BRACKETS			A	
FRAME CODE	FRAME WIDTH	ANGLE SIZE	CAST	FABRICATED
A	33.25"	.38" x 4" X 4"	-0.38"	4.12"
B	33.38"		-0.31"	4.19"
C	33.50"		-0.25"	4.25"
D	33.62"		-0.19"	4.31"
E	33.75		-0.13"	4.38"
F	33.88"		-0.06"	4.44"
G	34.00"		0.00"	4.50"

FRAME CODE FOR "W" BRACKETS			A	
FRAME CODE	FRAME WIDTH	ANGLE SIZE	CAST	FABRICATED
H	34.12"	.38" x 4" X 6"	0.06"	4.56"
J	34.25"		0.13"	4.62"
K	34.38"		0.19"	4.69"
L	34.50"		0.25"	4.75"

Note: The Stationary Fabricated Bracket was replaced by the Cast Stationary Bracket. See Chart on next page for Cross Reference.

 Amendments and errors reserved. © SAF-HOLLAND, Inc.

FW ** W *00 G * **

Mounting Base W= 4" Vertical Leg Angle	Mounting Height	Angles	L= Left R= Right	Options 00= Stationary

Example: FW35W600GL00



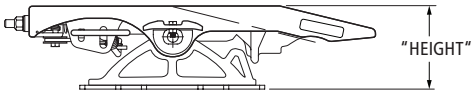

Height is measured from Face of Top Plate to Frame Rail

**AVAILABLE TOP PLATES	
FW35	FWAL
FW31	FW8
FW33	FW83
FW17	FW2000
FW16	FWS1

FW PART NUMBER (CAST BRACKET)◊	FW PART NUMBER (FABRICATED BRACKET)*◊	HEIGHT	BRACKET REPLACEMENT KIT◊	BRACKET KIT WEIGHT LBS [KG]
FW**W600GL__	FW**-7814GL__	2.88"	RK-W600-G	99.00 [44.91]
FW**W700GL__	FW**-7813GL__	3.88"	RK-W700-G	104.00 [47.17]
FW**W800GL__	FW**-7812GL__	4.88"	RK-W800-G	109.00 [49.44]
FW**W900GL__	FW**-7811GL__	5.88"	RK-W900-G	115.00 [52.16]

◊ For right-hand release fifth wheels, change "L" to "R" in part number.
* No Longer Available

 Amendments and errors reserved. © SAF-HOLLAND, Inc.

Cast Bracket

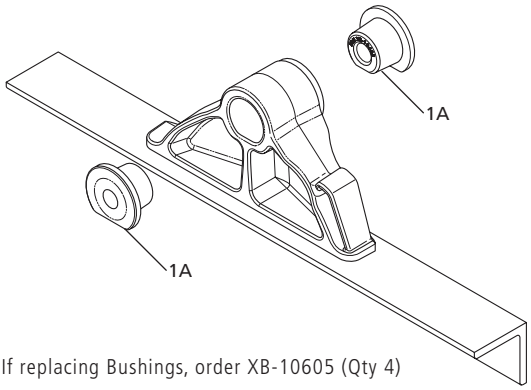

If replacing Bushings, order XB-10605 (Qty 4)

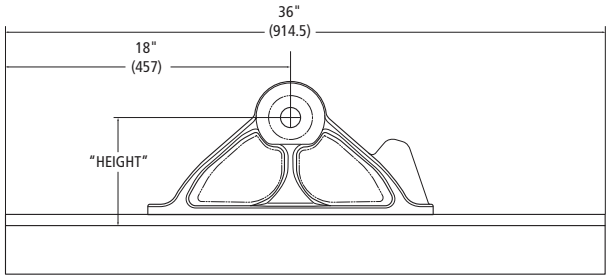

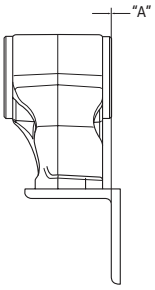

Fabricated Bracket

No Longer Available, Replaced by Cast Version.

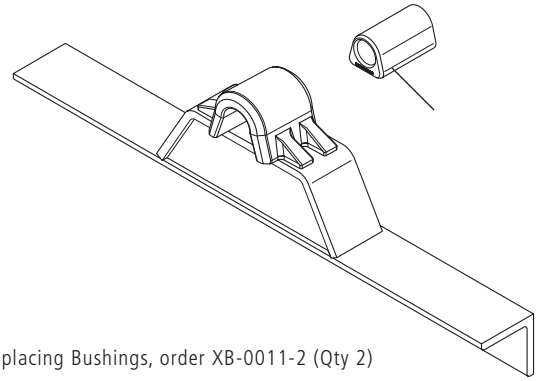

If replacing Bushings, order XB-0011-2 (Qty 2)

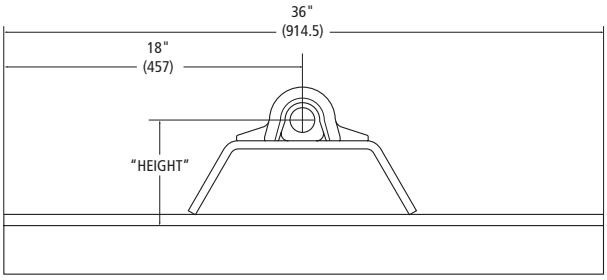

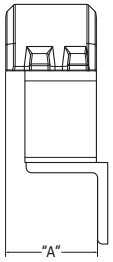

FRAME CODE FOR "V" BRACKETS			A
FRAME CODE	FRAME WIDTH	ANGLE SIZE	CAST
A	33.25"	.38" x 5" X 5"	-0.38"
B	33.38"		-0.31"
C	33.50"		-0.25"
D	33.62"		-0.19"
E	33.75		-0.13"
F	33.88"		-0.06"
G	34.00"		0.00"
H	34.12"		0.06"
J	34.25"		0.13"
K	34.38"		0.19"
L	34.50"		0.25"

FRAME CODE FOR "V" BRACKETS			A
FRAME CODE	FRAME WIDTH	ANGLE SIZE	CAST
M	34.62"	.38" x 5" X 5"	0.31"
N	34.75"		0.38"
P	34.88"		0.44"
Q	35.00"		0.50"
R	35.12"		0.56"
S	35.25"		0.62"
T	35.38"		0.69"
U	35.50"		0.75"
V	35.62"		0.81"
W	35.75"		0.88"

XL-FW10081PM-en-US Rev D 2016-03-01 Amendments and errors reserved. © SAF-HOLLAND, Inc.

FW ** V * 00 G * **

Mounting Base W= 5" Vertical Leg Angle	Mounting Height	Angles	L= Left R= Right	Options 00= Stationary

Example: FW35V600GL00



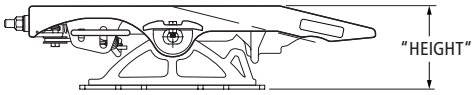

**AVAILABLE TOP PLATES	
FW35	FWAL
FW31	FW8
FW33	FW83
FW17	FW2000
FW16	FWS1

FW PART NUMBER (CAST BRACKET)◊	FW PART NUMBER (FABRICATED BRACKET)*◊	HEIGHT	BRACKET REPLACEMENT KIT◊	BRACKET KIT WEIGHT LBS [KG]
FW**V600GL__	FW**-7814GL__	2.88"	RK-V600-G	114.00 [51.71]
FW**V700GL__	FW**-7813GL__	3.88"	RK-V700-G	121.00 [54.88
FW**V800GL__	FW**-7812GL__	4.88"	RK-V800-G	125.00 [56.70]
FW**V900GL__	FW**-7811GL__	5.88"	RK-V900-G	131.00 [59.42]

◊ For right-hand release fifth wheels, change "L" to "R" in part number.
* No Longer Available

 Amendments and errors reserved. © SAF-HOLLAND, Inc.

Simplex Drop-Over Angle

SAF-HOLLAND Group

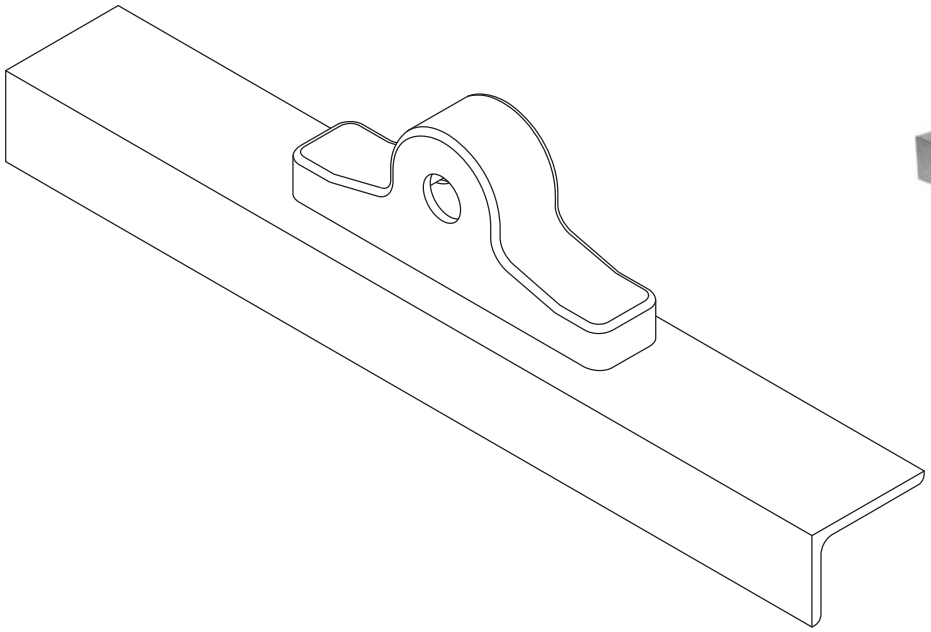



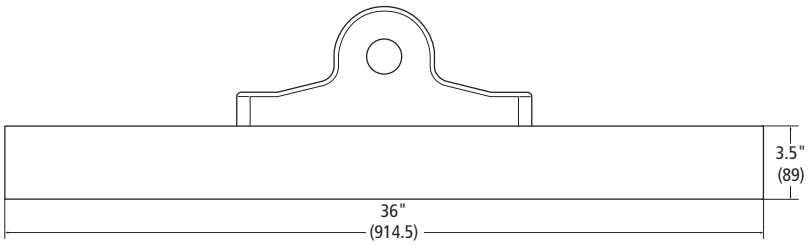

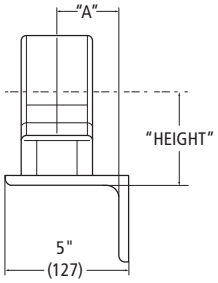

BRACKET PART NUMBER*	HEIGHT	A	REF. FRAME WIDTH
4101534	6.00" [152]	2.53"	34.00"
4101536	6.31" [160]		
4101538	7.56" [192]		
4101539	8.56" [217]		
4101540	9.06" [230]		
4101630	10.06" [256]		
4101734	6.00" [152]	2.28"	33.50"
4101736	6.31" [160]		
4101738	7.56" [192]		
4101739	8.56" [217]		
4101740	9.06" [230]		
4101830	10.06" [256]		
4101634	6.00" [152]	2.16"	33.25"
4101636	6.31" [160]		
4101638	7.56" [192]		
4101639	8.56" [217]		
4101640	9.06" [230]		
4101730	10.06" [256]		

Discontinued - Replacement Parts Only

*No longer available

XL-FW10081PM-en-US Rev D 2016-03-01 Amendments and errors reserved. © SAF-HOLLAND, Inc.

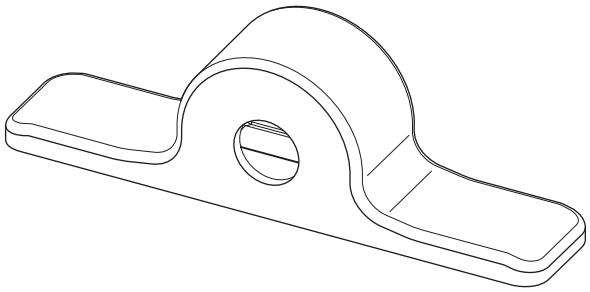



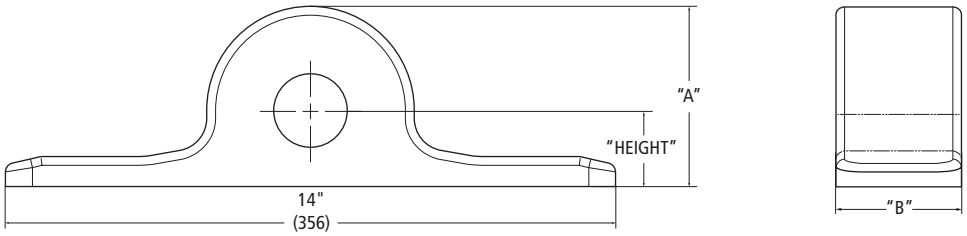

FW PART NUMBER	FW WEIGHT LB [KG]	BRACKET PART NUMBER+**	BRACKET HEIGHT IN [MM]	INSIDE BRACKET	OUTSIDE BRACKET	BRACKET WEIGHT LB [KG]
4019541	322.90 [146.46]	4109976	5.93" [151]	26.13" [664]	31.88" [810]	10.48 [4.75]
4019059	336.90 [152.82]	4109960	8.18" [208]			17.13 [7.77]
4019049	352.50 [159.89]	4109982	9.68" [246]	25.50" [648]	32.50" [826]	23.86 [10.82]

Discontinued - Replacement Parts Only

 Amendments and errors reserved. © SAF-HOLLAND, Inc.

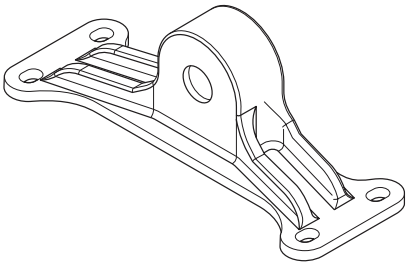



NARROW



WIDE

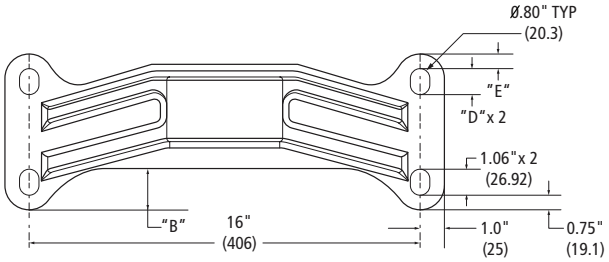

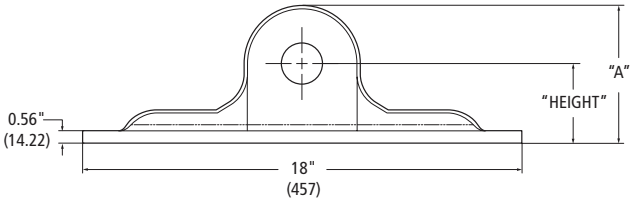

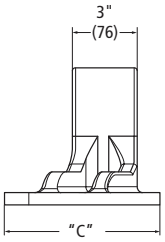

BRACKET TYPE	* BRACKET PART NO.	HEIGHT	A	B	C	D	E	BRACKET WEIGHT LBS [KG]
Narrow Flat Base	4109839	3.25"	5.63"	1.69"	6.38"	1.06"	0.75"	25.00 [11.34]
Wide Flat Base	4109865	2.38"	4.75"	3.09"	8.43"	1.76"	0.59"	24.00 [10.89]
Wide Flat Base	4109011	3.25"	5.63"	2.27"				27.00 [12.25]
Wide Flat Base	4109933	4.62"	7.06"	2.27"				30.00 [13.61]

* No longer available

XL-FW10081PM-en-US Rev D 2016-03-01 Amendments and errors reserved. © SAF-HOLLAND, Inc.

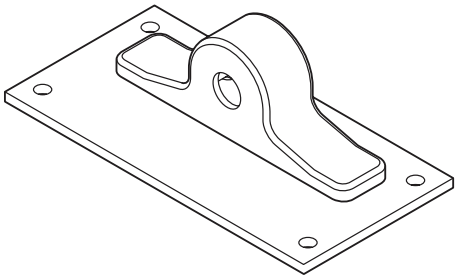



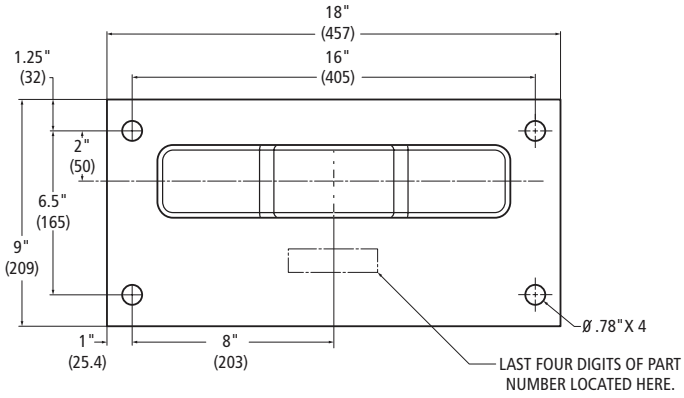

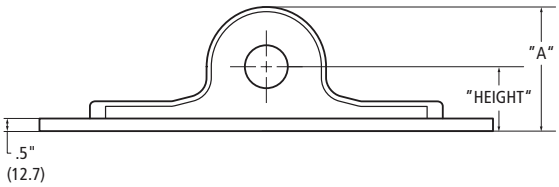

BRACKET NUMBER	HEIGHT	A	BRACKET WEIGHT LBS [KG]
4000105	2.56"	4.94"	33.00 [14.97]
4009114	3.81"	6.19"	37.00 [16.78]
4009297	4.81"	7.19"	40.00 [18.14]

 Amendments and errors reserved. © SAF-HOLLAND, Inc.

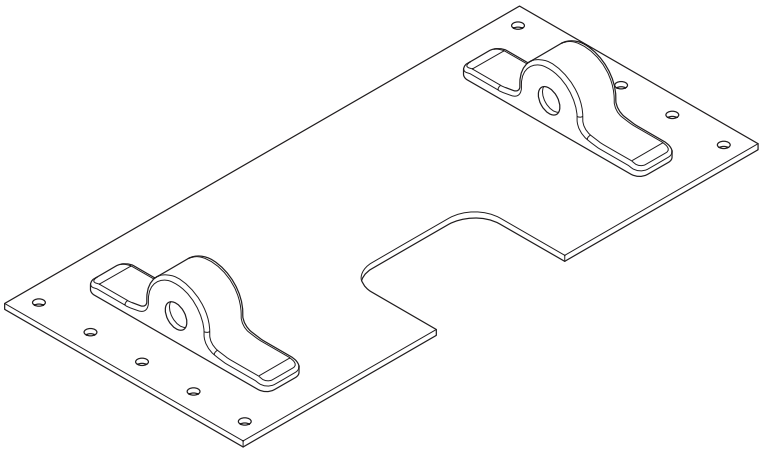



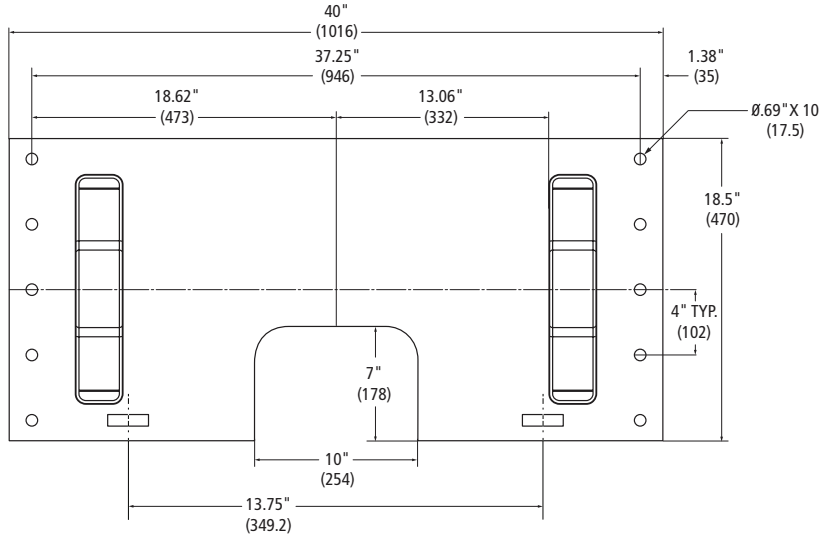

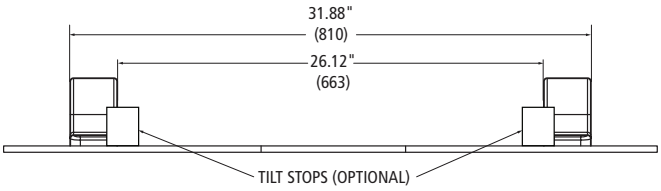

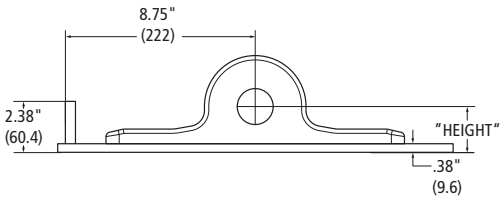

MOUNTING PLATES WITHOUT TILT STOPS		
FW BRACKET PART NO.	HEIGHT	BRACKET WEIGHT LBS [KG]
4009866	2.13"	92.00 [41.73]
4009867	2.44"	93.00 [42.18]
4009868	3.69"	100.00 [45.36]
4009822	4.69"	106.00 [48.08]
4009869	5.19"	110.00 [49.90]
4009823	6.19"	119.00 [53.98]

MOUNTING PLATES WITH TILT STOPS		
FW BRACKET PART NO.	HEIGHT	BRACKET WEIGHT LBS [KG]
4009747	2.13"	93.00 [42.18]
4009723	2.44"	94.00 [42.64]
4009821	3.69"	101.00 [45.81]

NOTE: No longer available

XL-FW10081PM-en-US Rev D 2016-03-01 Amendments and errors reserved. © SAF-HOLLAND, Inc.

THIS PAGE INTENTIONALLY LEFT BLANK

 Amendments and errors reserved. © SAF-HOLLAND, Inc.

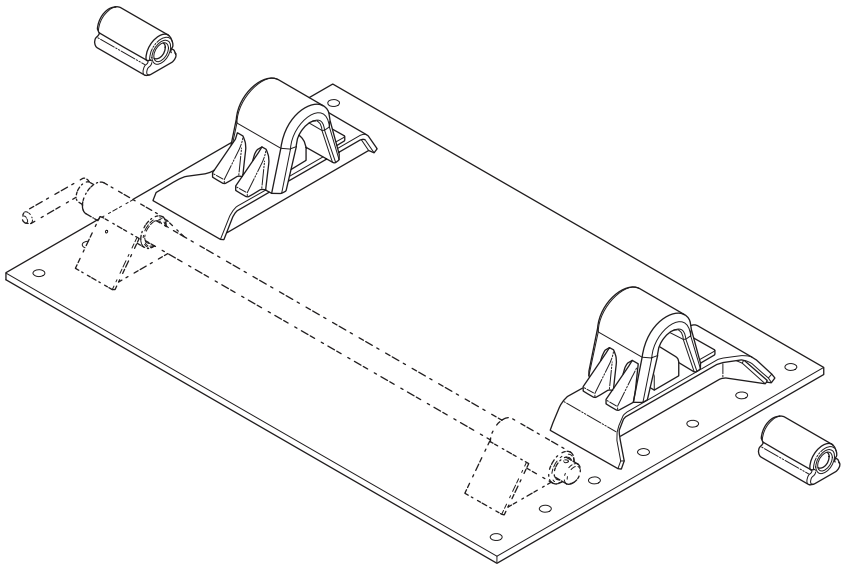

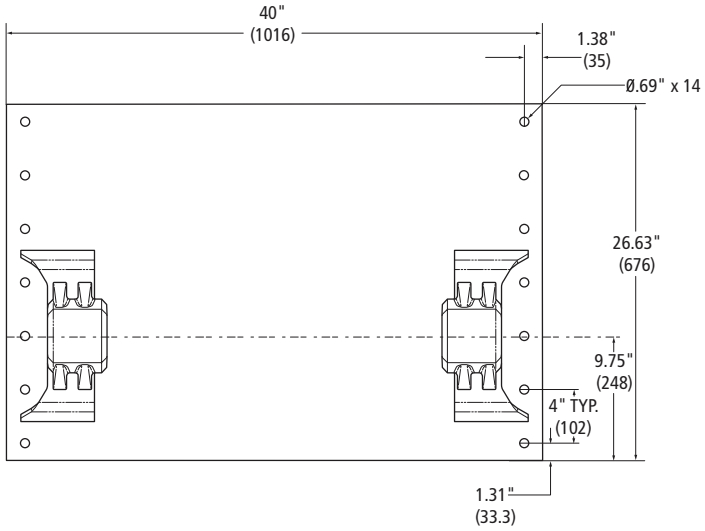



If replacing Bushings, order XB-0011-2 (Qty 2)

NOTE: No-tilt assembly not included in bracket part number. See Chart on next page for replacement tube and bracket part numbers.

 Amendments and errors reserved. © SAF-HOLLAND, Inc.

FW ** N * 00 X * **

Mounting Base N= No-Tilt	Mounting Height	Angles	L= Left R= Right	Options 00= Stationary

Example: FW35N800YL00 (Outboard)
FW35N800ZL00 (Inboard)

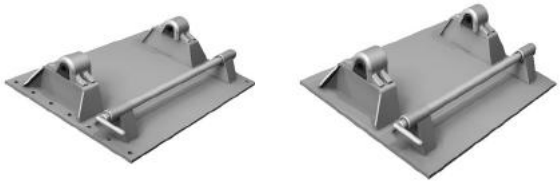

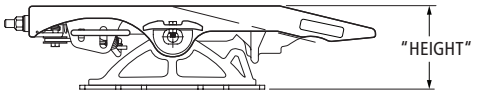

Height is measured from Face of Top Plate to Frame Rail

**AVAILABLE TOP PLATES	
FW35	FW8
FW33	FW2000
FW3500 *	

Note: Not all are available in full assemblies

INBOARD/ OUTBOARD	ILS PART # ◊	LEGACY PART # ◊	REPLACEMENT BRACKETS	HEIGHT IN [MM]	BRACKET WEIGHT LBS [KG]	NO-TILT TUBE
Outboard	FW**N800YL00	FW**-8984XL06	XA-8984	5.06" [129]	199.00 [90.26]	XA-0313-2 (QTY 2)
	FW**N900YL00	FW**-8983XL06	XA-8983	6.06" [154]	195.00 [88.45]	
Inboard	FW**N800ZL00	FW**-8922XL06	XA-8922	5.06" [129]	162.00 [73.48]	

* No longer available.

** For No-Tilt with Manual Secondary Lock, change "06" to "34" in part number (not available on FW8).

◊ For right-hand release fifth wheels, change "L" to "R" in part number.

 Amendments and errors reserved. © SAF-HOLLAND, Inc.

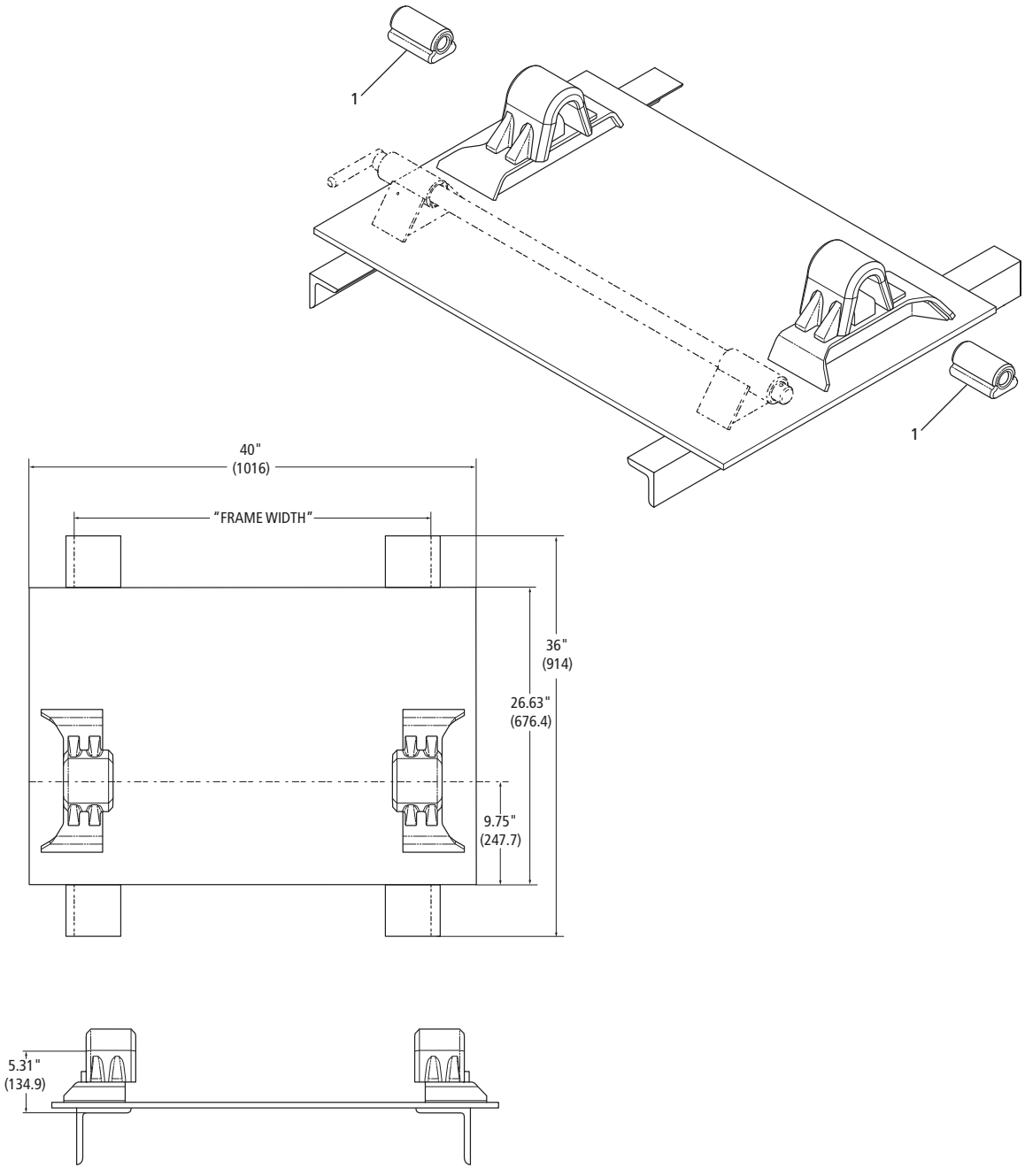

If replacing Bushings, order XB-0011-2 (Qty 2)

XL-FW10081PM-en-US Rev D 2016-03-01 Amendments and errors reserved. © SAF-HOLLAND, Inc.

FW	**	N	*	00	A	*	06
		Mounting Base N= No-Tilt		Mounting Height	Frame Width	L= Left R= Right	Options

Example: FW35N800AL06

**AVAILABLE TOP PLATES	
FW35	FW8
FW33	FW2000
FW3500 *	

Note: Not all are available in full assemblies



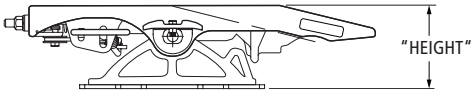

Height is measured from Face of Top Plate to Frame Rail

ILS PART NUMBER ◊	LEGACY PART NUMBER ◊	REPLACEMENT BRACKETS	MOUNTING ANGLE SIZE	BRACKET WEIGHT LBS [KG]	NO-TILT TUBE
FW**N800AL06	FW**-8922AL06	XA-8922-A	4 x 4 x .31"	218.00 [98.88]	XA-0313-2
FW**N800AL34	FW**-8922AL34	XA-8922-A	4 x 4 x .38"	218.00 [98.88]	
FW**N800AL51	FW**-8922AL51	XA-8922-A-51	4 x 6 x .38"		
FW**N800AL57	FW**-8922AL57	XA-8922-A-57	3.5 x 4 x .31"		
FW**N800AL63	FW**-8922AL63	XA-8922-A-21	5 x 5 x .38"		
FW**N800AL65	FW**-8922AL65	XA-8922-A-65	4 x 4 x .31"		

* No longer available.

** For Alternate Frame Width, see Frame Width Chart.

◊ For right-hand release fifth wheels, change "L" to "R" in part number.

FRAME WIDTH CHART			
FRAME CODE	FRAME WIDTH	FRAME CODE	FRAME WIDTH
A	33.25" [844.6]	G	34.00" [863.6]
B	33.38" [847.9]	H	34.12 [866.7]
C	33.50" [850.9]	J	34.25 [870.0]
D	33.62" [854.0]	K	34.38 [873.3]
E	33.75" [857.3]	L	34.50 [876.3]
F	33.88" [860.6]		

 Amendments and errors reserved. © SAF-HOLLAND, Inc.

ILS Outboard Exploded View

SAF-HOLLAND Group

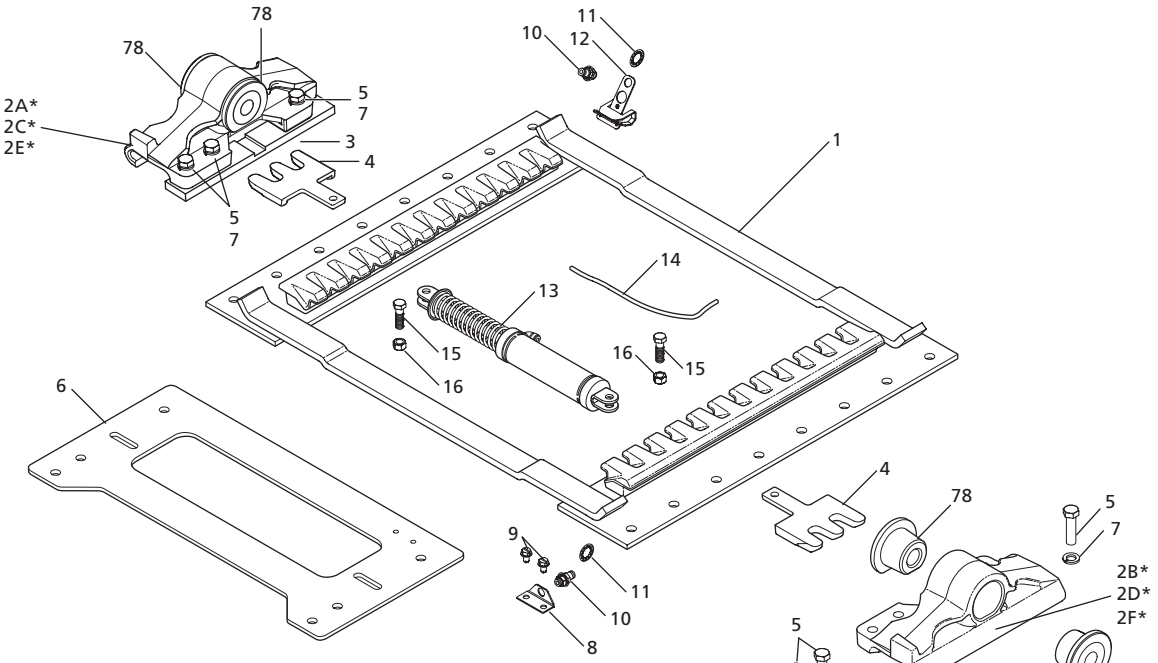

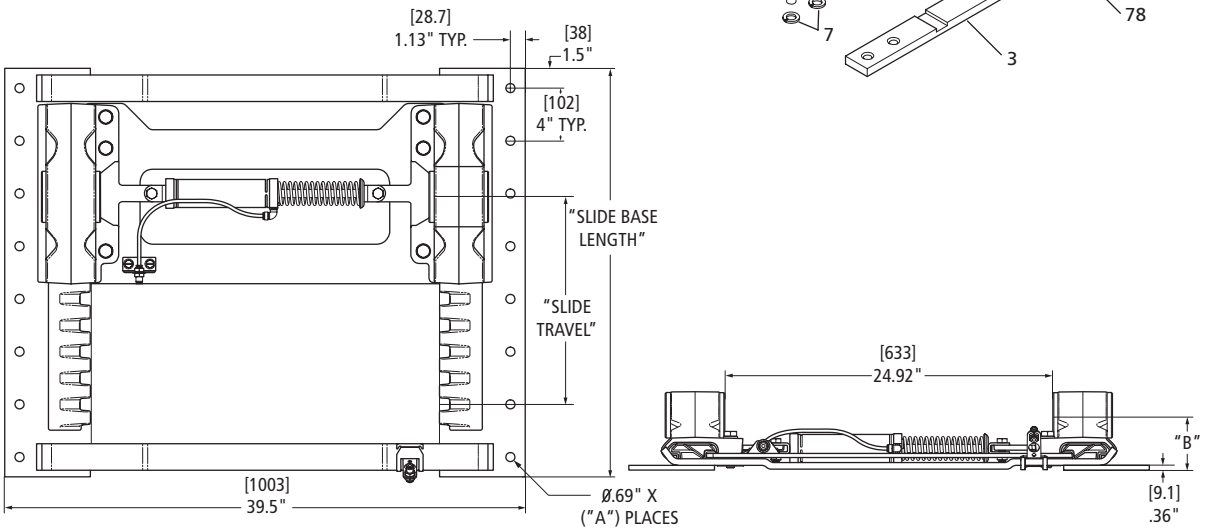

ILS OUTBOARD SERIES PARTS LIST

ITEM	DESCRIPTION	PART NUMBER	QTY.	WEIGHT LBS [KG]
1	Slide Base	SEE FW CHART	1	N/A
2A*	Bracket, Sliding LH 7"	XD-10689-IL	1	N/A
2B*	Bracket, Sliding RH 7"	XD-10689-IR	1	N/A
2C*	Bracket, Sliding LH 8"	XD-10689-2L	1	27.20 [12.34]
2D*	Bracket, Sliding RH 8"	XD-10689-2R	1	27.20 [12.34]
2E*	Bracket, Sliding LH 9"	XD-10689-3L	1	29.20 [13.24]
2F*	Bracket, Sliding RH 9"	XD-10689-3R	1	29.20 [13.24]
3	Block, Stop	XA-10711-1	2	4.56 [2.07]
4	Plunger, Rack	XA-10604-1	2	2.69 [1.22]
5	HHCS, M16 x 2.0 x 60mm	XB-HCS-M16-60-Z	6	0.29 [0.13]
6	Plate, Slide Bracket	XA-10606-1	1	20.30 [9.21]

ILS OUTBOARD SERIES PARTS LIST

ITEM	DESCRIPTION	PART NUMBER	QTY.	WEIGHT LBS [KG]
7	Washer, Lock, M16 Type B	XB-LW-M16-Z	6	0.02 [0.01]
8	Bracket, Air Line	XB-11297	1	0.08 [0.04]
9	Screw, Cutting, .38"-16 x .63"	XB-10814	2	0.04 [0.02]
10	Union, Quick Connect Bulkhead, .25"	XB-11298	2	0.09 [0.04]
11	Washer, Locking, .60" I.D. x .99" O.D.	XB-11296	2	0.01 [0.005]
12	Clip, Air Line Stand-Off Clip	XA-10736	1	0.16 [0.07]
13	Cylinder Assembly, Air	XA-10700	1	4.49 [2.04]
14	Tubing, .25" O.D. X 14.25" Nylon	XB-10809	1	0.02 [0.01]
15	HHCS, .50"-20 x 1.75" Gr 5	XB-2083	2	0.13 [0.06]
16	Nut, Lock, .50"-20 UNF 2B	XB-758	2	0.04 [0.02]
78	Cushion, Rubber, ILS	XB-10605	4	0.39 [0.18]

*Not sold individually - must be purchased in kit.

 Amendments and errors reserved. © SAF-HOLLAND, Inc.

FW ** A * ** X * **

Mounting Base A=Outboard	Mounting Height	Travel	L= Left R= Right	Options

Example: FW35A712XL00



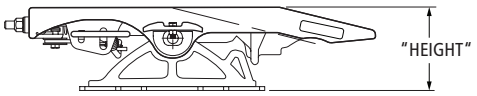

Height is measured from Face of Top Plate to Frame Rail

**AVAILABLE TOP PLATES	
FW35	FWAL
FW31	FW8
FW33	FW83
FW17	FWS1
FW16	

REFERENCE FW BASE PART NUMBER	SLIDE BASE AND BRACKET PART NUMBER	SLIDE BASE AND BRACKET WEIGHT LBS [KG]	SLIDE TRAVEL	SLIDE BASE LENGTH	DIM "B"	"A" # OF HOLES	SLIDE BASE PART NUMBER ITEM NO. 1	SLIDE BASE WEIGHT LBS [KG]	SLIDE BRACKET WEIGHT LBS [KG]
FW**A712XL__	XA-A712	190.00 [86.18]	12"	31"	3.93"	16	XA-A12	97.00 [44.00]	62.10 [28.17]
FW**A724XL__	XA-A724	223.00 [101.15]	24"	43"		22	XA-A24	130.00 [58.97]	
FW**A736XL__	XA-A736	257.00 [116.57]	36"	55"		28	XA-A36	163.00 [73.94]	
FW**A748XL__	XA-A748	290.00 [131.54]	48"	67"		34	XA-A48	197.00 [89.36]	
FW**A812XL__	XA-A812	194.00 [88.00]	12"	31"	4.93"	16	XA-A12	97.00 [44.00]	65.30 [29.62]
FW**A824XL__	XA-A824	228.00 [103.42]	24"	43"		22	XA-A24	130.00 [58.97]	
FW**A836XL__	XA-A836	262.00 [118.84]	36"	55"		28	XA-A36	163.00 [73.94]	
FW**A848XL__	XA-A848	295.00 [133.81]	48"	67"		34	XA-A48	197.00 [89.36]	
FW**A912XL__	XA-A912	199.00 [90.26]	12"	31"	5.93"	16	XA-A12	97.00 [44.00]	71.00 [32.21]
FW**A924XL__	XA-A924	232.00 [105.23]	24"	43"		22	XA-A24	130.00 [58.97]	
FW**A936XL__	XA-A936	266.00 [120.66]	36"	55"		28	XA-A36	163.00 [73.94]	
FW**A948XL__	XA-A948	299.00 [135.62]	48"	67"		34	XA-A48	197.00 [89.36]	

** Fifth wheel model number.
__ See option code per fifth wheel assembly.

 Amendments and errors reserved. © SAF-HOLLAND, Inc.

ILS Inboard for Angle Exploded View

SAF-HOLLAND Group

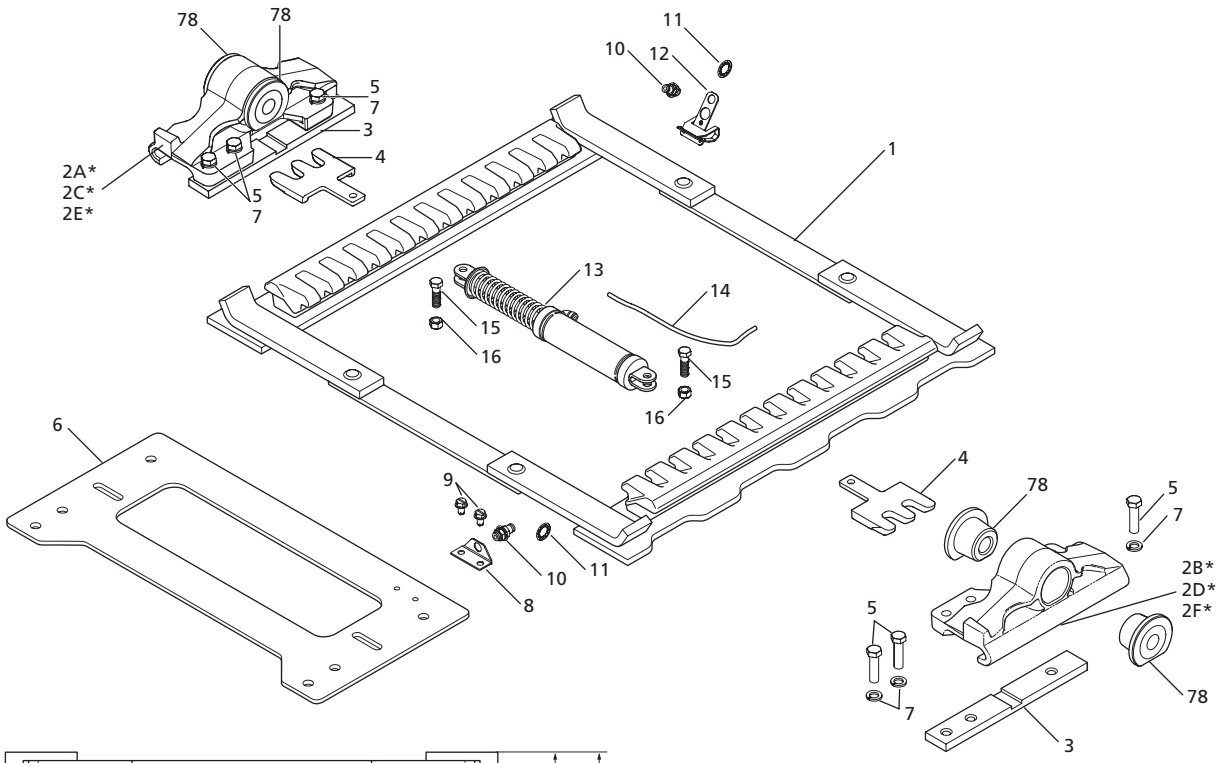

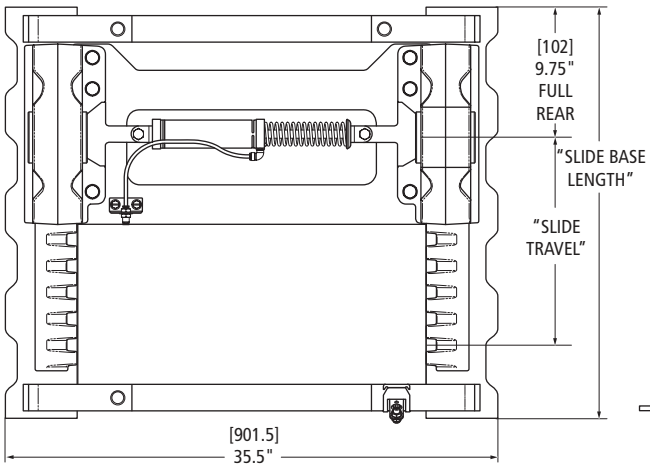

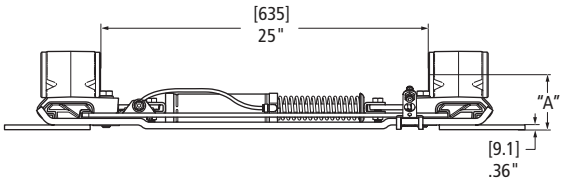

ILS INBOARD SERIES PARTS LIST				
ITEM	DESCRIPTION	PART NUMBER	QTY.	WEIGHT LBS [KG]
1	Slide Base	SEE FW CHART	1	N/A
2A*	Bracket, Sliding LH 7"	XD-10689-IL	1	N/A
2B*	Bracket, Sliding RH 7"	XD-10689-IR	1	N/A
2C*	Bracket, Sliding LH 8"	XD-10689-2L	1	27.20 [12.34]
2D*	Bracket, Sliding RH 8"	XD-10689-2R	1	27.20 [12.34]
2E*	Bracket, Sliding LH 9"	XD-10689-3L	1	29.20 [13.24]
2F*	Bracket, Sliding RH 9"	XD-10689-3R	1	29.20 [13.24]
3	Block, Stop	XA-10711-1	2	4.56 [2.07]
4	Plunger, Rack	XA-10604-1	2	2.69 [1.22]
5	HHCS, M16 x 2.0 x 60mm	XB-HCS-M16-60-Z	6	0.29 [0.13]
6	Plate, Slide Bracket	XA-10606-1	1	20.30 [9.21]

ILS INBOARD SERIES PARTS LIST				
ITEM	DESCRIPTION	PART NUMBER	QTY.	WEIGHT LBS [KG]
7	Washer, Lock, M16 Type B	XB-LW-M16-Z	6	0.02 [0.01]
8	Bracket, Air Line	XB-11297	1	0.08 [0.04]
9	Screw, Cutting, .38"-16 x .63"	XB-10814	2	0.04 [0.02]
10	Union, Quick Connect Bulkhead, .25"	XB-11298	2	0.09 [0.04]
11	Washer, Locking, .60" I.D. x .99" O.D.	XB-11296	2	0.01 [0.005]
12	Clip, Air Line Stand-Off Clip	XA-10736	1	0.16 [0.07]
13	Cylinder Assembly, Air	XA-10700	1	4.49 [2.04]
14	Tubing, .25" O.D. X 14.25" Nylon	XB-10809	1	0.02 [0.01]
15	HHCS, .50"-20 x 1.75" Gr 5	XB-2083	2	0.13 [0.06]
16	Nut, Lock, .50"-20 UNF 2B	XB-758	2	0.04 [0.02]
78	Cushion, Rubber, ILS	XB-10605	4	0.39 [0.18]

* Not sold individually - must be purchased in kit

 Amendments and errors reserved. © SAF-HOLLAND, Inc.

FW	* *	*	*	* *	X	*	* *
	Mounting Base Inboard	Mounting Height	Travel	L= Left R= Right		Options	

Example: FW35A712XL00



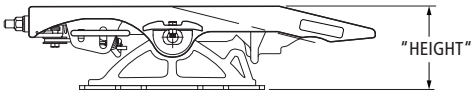

Height is measured from Face of Top Plate to Frame Rail

**AVAILABLE TOP PLATES	
FW35	FWAL
FW31	FW8
FW33	FW83
FW17	FWS1
FW16	

REFERENCE FW BASE PART NO.	SLIDE BASE AND BRACKET PART NO.	SLIDE BASE AND BRACKET WEIGHT LBS [KG]	SLIDE TRAVEL	SLIDE BASE LENGTH	DIM "A"	SLIDE BASE PART NO. ITEM NO. 1	SLIDE BASE WEIGHT LBS [KG]	SLIDE BRACKET WEIGHT LBS [KG]	APPROX. FW HEIGHT
FW**B712XL__	XA-B712X	173.00 [78.47]	12"	31"	3.93"	XA-B12X	80.00 [36.29]	62.10 [28.17]	7.00"
FW**B724XL__	XA-B724X	201.00 [91.17]	24"	43"		XA-B24X	108.00 [48.99]		
FW**B736XL__	XA-B736X	229.00 [103.87]	36"	55"		XA-B36X	136.00 [61.69]		
FW**B748XL__	XA-B748X	257.00 [116.57]	48"	67"		XA-B48X	164.00 [74.39]		
FW**B812XL__	XA-B812X	178.00 [80.74]	12"	31"	4.93"	XA-B12X	80.00 [36.29]	65.30 [29.62]	8.00"
FW**B824XL__	XA-B824X	206.00 [93.44]	24"	43"		XA-B24X	108.00 [48.99]		
FW**B836XL__	XA-B836X	234.00 [106.14]	36"	55"		XA-B36X	136.00 [61.69]		
FW**B848XL__	XA-B848X	262.00 [118.84]	48"	67"		XA-B48X	164.00 [74.39]		
FW**B912XL__	XA-B912X	182.00 [82.55]	12"	31"	5.93"	XA-B12X	80.00 [36.29]	71.00 [32.21]	9.00"
FW**B924XL__	XA-B924X	210.00 [95.25]	24"	43"		XA-B24X	108.00 [48.99]		
FW**B936XL__	XA-B936X	238.00 [107.95]	36"	55"		XA-B36X	136.00 [61.69]		
FW**B948XL__	XA-B948X	266.00 [120.66]	48"	67"		XA-B48X	164.00 [74.39]		

** Fifth wheel model number.
__ See option code per fifth wheel assembly.

 Amendments and errors reserved. © SAF-HOLLAND, Inc.

ILS Inboard with Angle Exploded View

SAF-HOLLAND Group

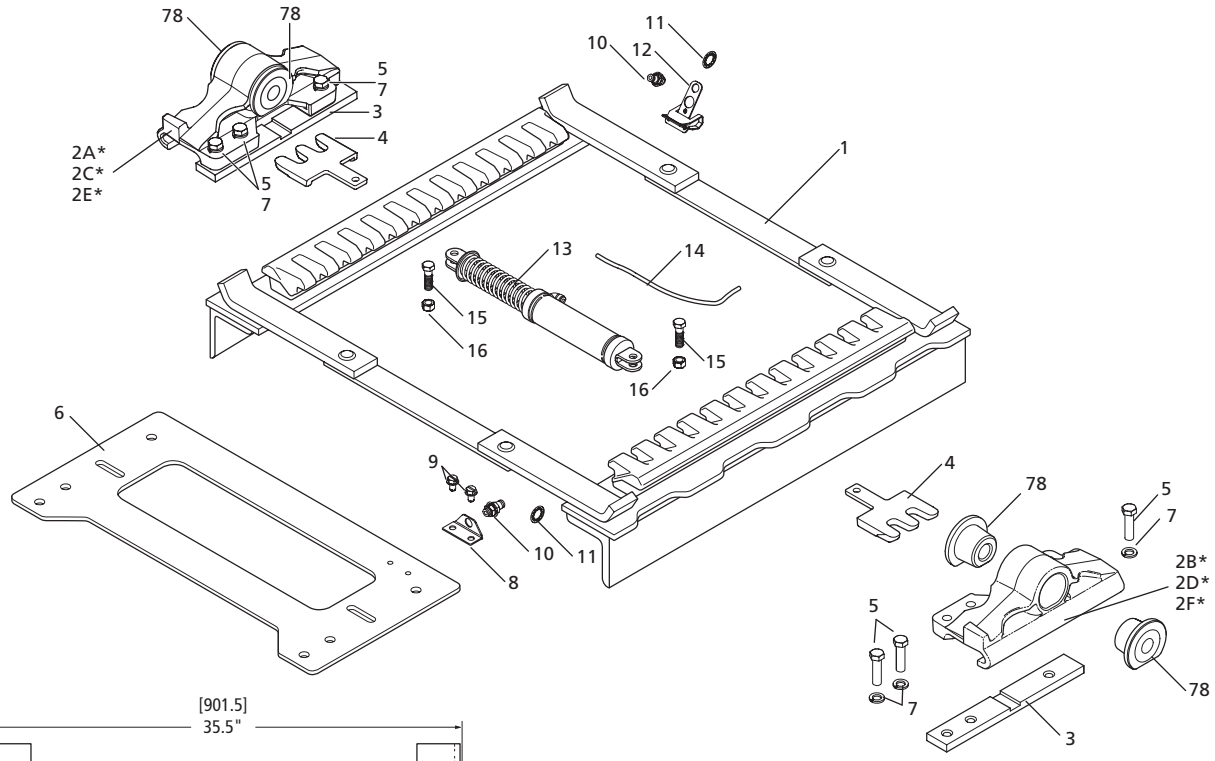

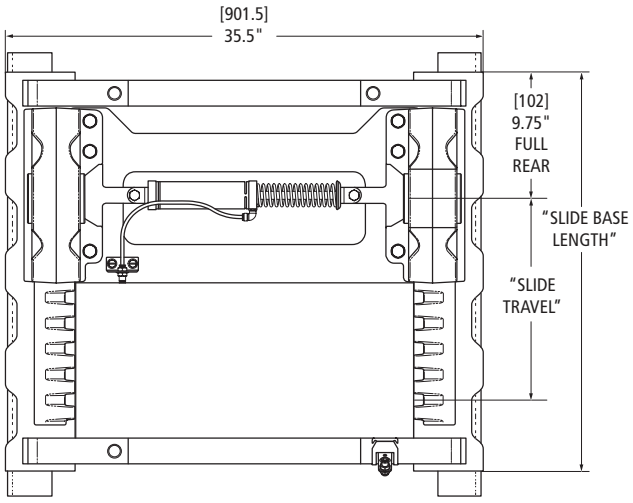

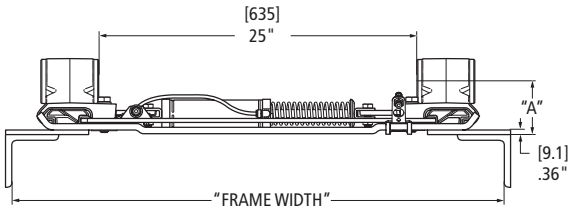

Angle size see frame width code sheet.

ILS INBOARD SERIES PARTS LIST

ITEM	DESCRIPTION	PART NUMBER	QTY.	WEIGHT LBS [KG]
1	Slide Base	SEE FW CHART	1	N/A
2A*	Bracket, Sliding LH 7"	XD-10689-IL	1	N/A
2B*	Bracket, Sliding RH 7"	XD-10689-IR	1	N/A
2C*	Bracket, Sliding LH 8"	XD-10689-2L	1	27.20 [12.34]
2D*	Bracket, Sliding RH 8"	XD-10689-2R	1	27.20 [12.34]
2E*	Bracket, Sliding LH 9"	XD-10689-3L	1	29.20 [13.24]
2F*	Bracket, Sliding RH 9"	XD-10689-3R	1	29.20 [13.24]
3	Block, Stop	XA-10711-1	2	4.56 [2.07]
4	Plunger, Rack	XA-10604-1	2	2.69 [1.22]
5	HHCS, M16 x 2.0 x 60mm	XB-HCS-M16-60-Z	6	0.29 [0.13]
6	Plate, Slide Bracket	XA-10606-1	1	0.29 [0.13]

ILS INBOARD SERIES PARTS LIST

ITEM	DESCRIPTION	PART NUMBER	QTY.	WEIGHT LBS [KG]
7	Washer, Lock, M16 Type B	XB-LW-M16-Z	6	0.02 [0.01]
8	Bracket, Air Line	XB-11297	1	0.08 [0.04]
9	Screw, Cutting, .38"-16 x .63"	XB-10814	2	0.04 [0.02]
10	Union, Quick Connect Bulkhead, .25"	XB-11298	2	0.09 [0.04]
11	Washer, Locking, .60" I.D. x .99" O.D.	XB-11296	2	0.01 [0.005]
12	Clip, Air Line Stand-Off Clip	XA-10736	1	0.16 [0.07]
13	Cylinder Assembly, Air	XA-10700	1	4.49 [2.04]
14	Tubing, .25" O.D. X 14.25" Nylon	XB-10809	1	0.02 [0.01]
15	HHCS, .50"-20 x 1.75" Gr 5	XB-2083	2	0.13 [0.06]
16	Nut, Lock, .50"-20 UNF 2B	XB-758	2	0.04 [0.02]
78	Cushion, Rubber, ILS	XB-10605	4	0.39 [0.18]

* Not sold individually - must be purchased in kit

 Amendments and errors reserved. © SAF-HOLLAND, Inc.

FW	* *	*	*	* *	,	*	*	* *
	Mounting Bracket Style See Bracket Option Chart	Mounting Height	Travel	Frame Width See Frame Width Chart	L= Left R= Right	Options See FW Section		

Example: FW35B712GL00



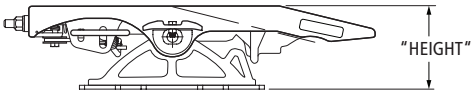

Height is measured from Face of Top Plate to Frame Rail

**AVAILABLE TOP PLATES	
FW35	FWAL
FW31	FW8
FW33	FW83
FW17	FWS1
FW16	

REFERENCE FW BASE PART NO.	SLIDE BASE AND BRACKET PART NO.	SLIDE BASE AND BRACKET WEIGHT LBS [KG]	SLIDE TRAVEL	SLIDE BASE LENGTH	HEIGHT	SLIDE BASE PART NO. ITEM NO. 1	SLIDE BASE WEIGHT LBS [KG]	SLIDE BRACKET WEIGHT LBS [KG]	APPROX. FW HEIGHT
FW**B712GL__	XA-B712G	225.00 [102.06]	12"	31"	4.3"	XA-B12G	132.00 [59.87]	62.10 [28.17]	7.00"
FW**B724GL__	XA-B724G	271.00 [122.92]	24"	43"		XA-B24G	178.00 [80.74]		
FW**B736GL__	XA-B736G	318.00 [144.24]	36"	55"		XA-B36G	224.00 [101.60]		
FW**B748GL__	XA-B748G	363.00 [164.65]	48"	67"		XA-B48G	270.00 [122.47]		
FW**B812GL__	XA-B812G	230.00 [104.33]	12"	31"	5.3"	XA-B12G	132.00 [59.87]	65.30 [29.62]	8.00"
FW**B824GL__	XA-B824G	276.00 [125.19]	24"	43"		XA-B24G	178.00 [80.74]		
FW**B836GL__	XA-B836G	322.00 [146.06]	36"	55"		XA-B36G	224.00 [101.60]		
FW**B848GL__	XA-B848G	368.00 [166.92]	48"	67"		XA-B48G	270.00 [122.47]		
FW**B912GL__	XA-B912G	234.00 [106.14]	12"	31"	6.3"	XA-B12G	132.00 [59.87]	71.00 [32.21]	9.00"
FW**B924GL__	XA-B924G	280.00 [127.01]	24"	43"		XA-B24G	178.00 [80.74]		
FW**B936GL__	XA-B936G	326.00 [147.87]	36"	55"		XA-B36G	224.00 [101.60]		
FW**B948GL__	XA-B948G	372.00 [168.74]	48"	67"		XA-B48G	270.00 [122.47]		

** Fifth wheel model number.
__ See option code per fifth wheel assembly.

FRAME WIDTH CODE SHEET		
FRAME WIDTH CODE LETTER	FRAME WIDTH	ANGLE SIZE
A	33.25"	.38"x 3"x 4"
B	33.38"	.38"x 3"x 4"
C	33.50"	.38"x 3"x 4"
D	33.62"	.38"x 3.5"x 4"
E	33.75"	.38"x 3.5"x 4"
F	33.88"	.38"x 3.5"x 4"
G †	34.00"	.38"x 3.5"x 4"
H	34.12"	.38"x 3.5"x 4"

FRAME WIDTH CODE SHEET		
FRAME WIDTH CODE LETTER	FRAME WIDTH	ANGLE SIZE
J	34.25"	.38"x 3.5"x 4"
K	34.38"	.38"x 3.5"x 4"
L	34.50"	.38"x 4"x 4"
M	34.62"	.38"x 4"x 4"
N	34.75"	.38"x 4"x 4"
P	34.88"	.38"x 4"x 4"
Q	35.00"	.38"x 4"x 4"

† Standard frame width code.

 Amendments and errors reserved. © SAF-HOLLAND, Inc.

RK-11409
Adjustable Slide Stop

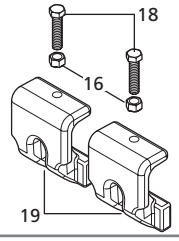

RK-11387
Tie Bar Shoulder

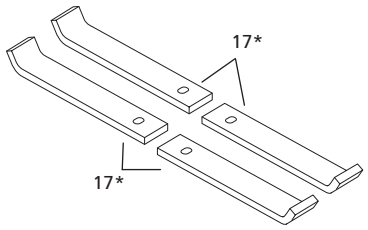

RK-10606-1
Rebuild Kit, ILS Slide Base

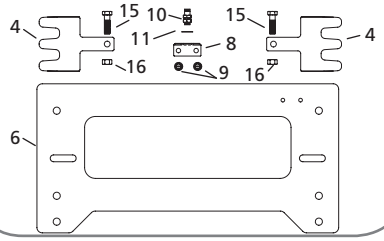

RK-10689-1
RK-10689-2
RK-10689-3
Slide Bracket Kit

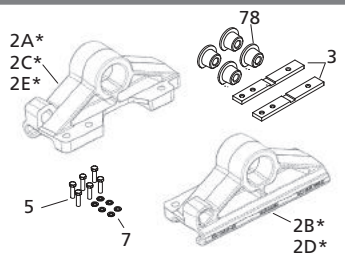

RK-NT-ILS-S
No-Tilt ILS Retrofit - Slider ◊

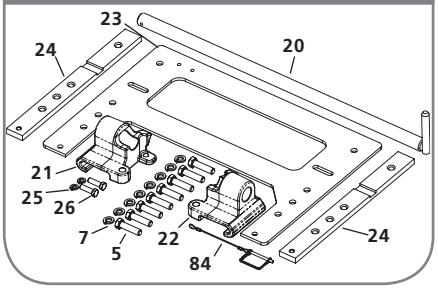

◊ FW Height must be 9" high to use kit or can also order RK-10689-3 to change to a 9" FW height

REPAIR KIT BOM

ITEM	DESCRIPTION	PART NUMBER	QTY.	WEIGHT LBS [KG]
2A*	Bracket, Sliding LH 7"	XD-10689-IL	1	N/A
2B*	Bracket, Sliding RH 7"	XD-10689-IR	1	N/A
2C*	Bracket, Sliding LH 8"	XD-10689-2L	1	27.20 [12.34]
2D*	Bracket, Sliding RH 8"	XD-10689-2R	1	27.20 [12.34]
2E*	Bracket, Sliding LH 9"	XD-10689-3L	1	29.20 [13.24]
2F*	Bracket, Sliding RH 9"	XD-10689-3R	1	29.20 [13.24]
3	Block, Stop	XA-10711-1	2	4.56 [2.07]
4	Plunger, Rack	XA-10604-1	2	2.69 [1.22]
5	HHCS, M16 x 2.0 x 60mm (RK-NT-ILS-S)	XB-HCS-M16-60-Z	8	0.29 [0.13]
	HHCS, M16 x 2.0 x 60mm (RK-10689-1, -2, -3)	XB-HCS-M16-60-Z	6	0.29 [0.13]
6	Plate, Sliding Bracket	XA-10606-1	1	20.30 [9.21]
7	Washer, Lock M16 (RK-NT-ILS-S)	XB-LW-M16-Z	8	0.02 [0.01]
	Washer, Lock M16 (RK-10689-1, -2, -3)	XB-LW-M16-Z	6	0.02 [0.01]
8	Bracket	XB-11297	1	0.08 [0.04]
9	Screw, Thread Cutting, 3/8"- 16 x 5/8"	XB-10814	2	0.04 [0.02]
10	Air Fitting, 1/4" Quick Connect	XB-11298	1	0.09 [0.04]
11	Washer, Locking	XB-11296	1	0.01 [0.005]

REPAIR KIT BOM

ITEM	DESCRIPTION	PART NUMBER	QTY.	WEIGHT LBS [KG]
15	HHCS, 1/2"- 20 x 1-3/4"	XB-2083	2	0.13 [0.06]
16	Nut, 0.5"- 20 (RK-11409)	XB-758	2	0.04 [0.02]
	Nut, Lock, 1/2"- 20 GR C (RK-10606-1)	XB-T-69-A	2	0.04 [0.02]
17*	Tie Bar Shoulders	XA-11032	4	3.38 [1.53]
18	Bolt, 0.5"- 20 x 2.25" GR8	XB-11486	2	0.02 [0.01]
19	Stop, Slide – Adjustable	XA-11409-P	2	6.32 [2.87]
20	Shaft S/A, Handle	XA-1934-1	1	13.90 [6.30]
21	No Tilt Bracket, RH 9"	XA-11627-R	1	9.86 [4.47]
22	No Tilt Bracket, LH 9"	XA-11627-L	1	9.86 [4.47]
23	Plate, No Tilt Sliding - Painted	XA-11628-P	1	23.30 [10.57]
24	Block, Stop	XA-11479	2	6.64 [3.01]
25	Washer, Spring Lock M12	XB-LW-M12-Z	2	0.01 [0.005]
26	HHHC, M12 x 1.75 x 40 10.9 Zinc Pltd w/ Patc	XB-HCS-M12-40-Z	2	0.05 [0.02]
27	Label (Not Shown)	XL-RK-NT-ILS-S	1	N/A
28	Literature (Not Shown)	XL-FW20040RM-en-US	1	N/A
78	Cushion, Rubber, ILS	XB-10605	4	0.39 [0.18]
84	Wire Lock Pin 1/4" and Lanyard	XB-11157-1	1	0.10 [0.05]

* Not sold individually - must be purchased in kit

Amendments and errors reserved. © SAF-HOLLAND, Inc.

THIS PAGE INTENTIONALLY LEFT BLANK

 Amendments and errors reserved. © SAF-HOLLAND, Inc.

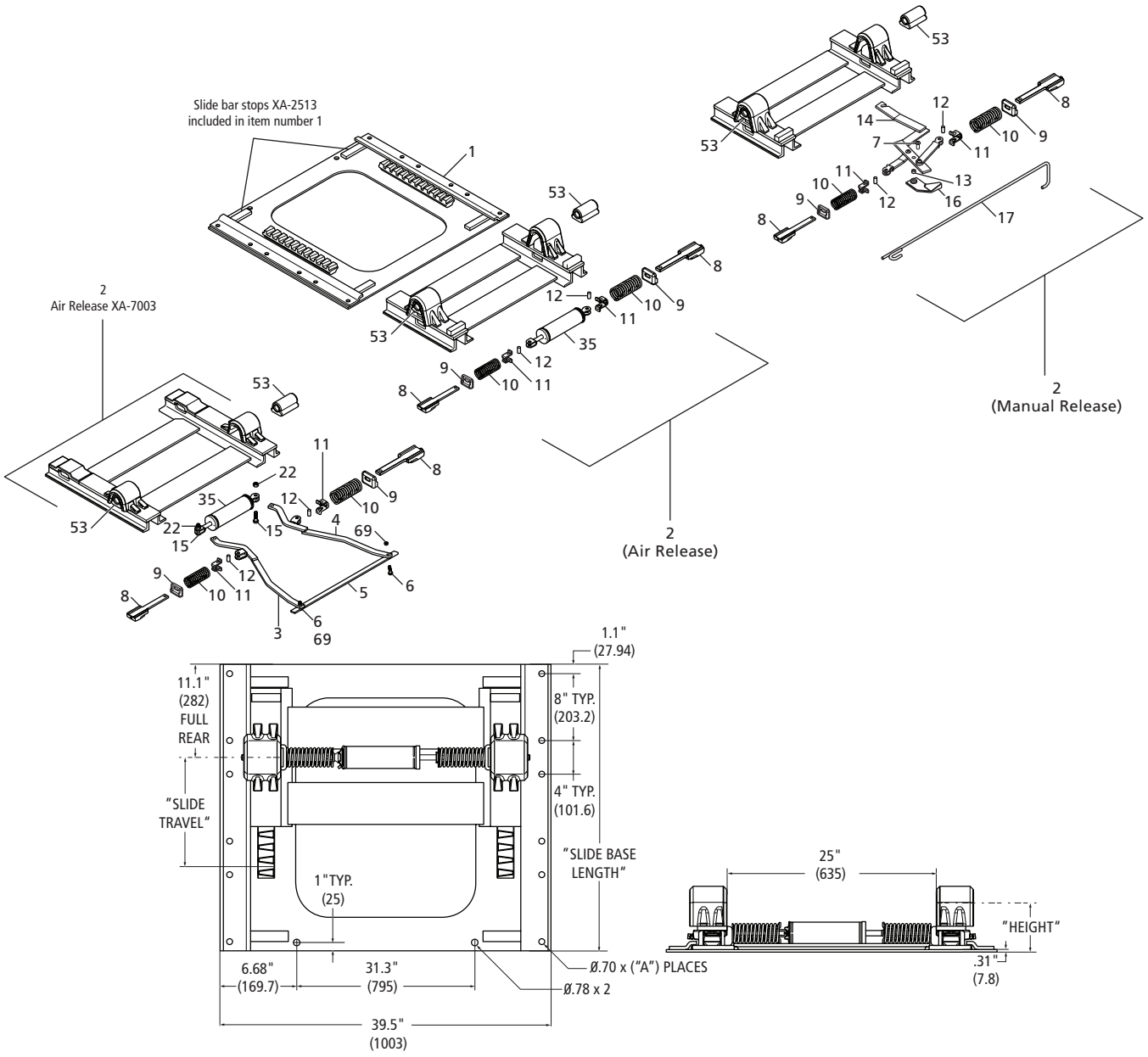

TRADITIONAL OUTBOARD SERIES PARTS LIST				
ITEM	DESCRIPTION	PART NUMBER	QTY	WEIGHT LBS [KG]
3	Lever, Left-Hand	XA-0708-A	1	3.10 [1.41]
4	Lever, Right-Hand	XA-0709-A	1	3.10 [1.41]
5	Bar, Tie	XA-0712	1	1.80 [0.82]
6	HHCS .38"-16 x 1.25", Plated	XB-C-375-C-125	2	0.04 [0.02]
7	SBHCS, .50"- 13 x 1.25"	XB-03730-1	1	0.10 [0.05]
8	Shoe Assembly	XA-0372-A	2	3.10 [1.41]
9	Stop, Spring	XA-01586	2	0.34 [0.15]
10	Spring	XB-2502	2	1.03 [0.47]
11	Retainer, Spring	XA-2501	2	0.24 [0.11]
12	Pin, .50" Diameter x 1.12"	XA-2503	2	0.06 [0.03]

TRADITIONAL OUTBOARD SERIES PARTS LIST				
ITEM	DESCRIPTION	PART NUMBER	QTY	WEIGHT LBS [KG]
13	Bushing, .50" I.D. x .68" O.D. x .44"	XA-03082	1	0.02 [0.01]
14	Lever Assembly, Release	XA-03748	1	7.30 [3.31]
15	HHCS, .50"-20 x 1.75" Gr 5	XB-2083	2	0.13 [0.06]
16	Plate Assembly, Pivot	XA-02748-1	1	1.50 [0.68]
17	Hook Assembly, Release	XA-0756	1	1.40 [0.64]
22	Lock Nut, .50"-20 Gr C	XB-T-69-A	2	0.04 [0.02]
35	Cylinder Assembly, Air	XA-2524-R	1	5.34 [2.42]
53	Cushion, Rubber	XB-0011-2	2	0.60 [0.27]
69	Lock Nut, .38"-16 Gr B	XB-338	2	0.02 [0.01]

XL-FW10081PM-en-US Rev D 2016-03-01 Amendments and errors reserved. © SAF-HOLLAND, Inc.

FW **-**** T* * **

Slide Bracket 8*** = Outboard	Slide Travel	L= Left R= Right	Options See FW Section

Example: FW35-8003T1L00

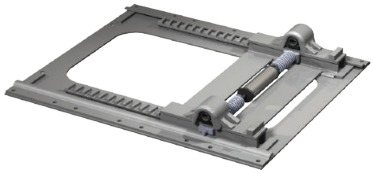

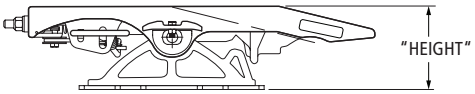

Height is measured from Face of Top Plate to Frame Rail

**AVAILABLE TOP PLATES	
FW35	FW8
FW31	FW83
FW33	FWS1
FW17	FW2000
FWAL	

REF. FW PART NUMBER	REPLACED BY FW BASE PART NUMBER	SLIDE BASE AND BRACKET ASS'Y	SLIDE BASE AND BRACKET ASS'Y WEIGHT LBS [KG]	SLIDE TRAVEL	SLIDE BASE LENGTH	"A" # of HOLES	HEIGHT	SLIDE BASE PART NO. ITEM NO. 1	SLIDE BASE WEIGHT LBS [KG]	SLIDE BRACKET TYPE	SLIDE BRACKET PART NO. ITEM NO.2	SLIDE BRACKET WEIGHT LBS [KG]
FW**-8003T1L__	FW**A712XL__	–	–	10.7"	42.2"	16	3.9"	XA-07871-1L	145.00 [65.77]	AIR	XA-7003	125.00 [56.70]
FW**-8003T2L__	FW**A724XL__	–	–	16.8"	50.2"	18		XA-07871-2L	145.00 [65.77]			
FW**-8003T3L__	FW**A724XL__	–	–	24.5"	55.2"	20		XA-07871-3L	168.00 [76.20]			
FW**-8003T4L__	FW**A736XL__	–	–	41.3"	74.2"	26		XA-07871-4L	187.00 [84.82]			
FW**-8002T1L__	FW**A812XL__	–	–	12.2"	34.2"	12	4.9"	XA-07871-1	248.00 [112.49]		XA-7002	107.00 [48.53]
FW**-8002T2L__	FW**A824XL__	–	–	18.4"	42.2"	16		XA-07871-2	113.00 [51.26]			
FW**-8002T3L__	FW**A824XL__	–	–	24.5"	46.2"	16		XA-07871-3	140.00 [63.50]			
FW**-8002T4L__	FW**A836XL__	–	–	36.7"	58.2"	20		XA-07871-4	153.00 [69.40]			
FW**-8002T5L__	FW**A848XL__	–	–	48.9"	70.2"	24		XA-07871-5	193.00 [87.54]			
FW**-8001T1L__	FW**A912XL__	–	–	12.2"	32.0"	12	5.9"	XA-07871-1	233.00 [105.69]		XA-7001	113.00 [51.26]
FW**-8001T2L__	FW**A924XL__	–	–	18.0"	42.2"	16		XA-07871-2	113.00 [51.26]			
FW**-8001T3L__	FW**A924XL__	–	–	24.5"	46.2"	16		XA-07871-3	140.00 [63.50]			
FW**-8001T4L__	FW**A936XL__	–	–	36.7"	58.2"	20		XA-07871-4	153.00 [69.40]			
FW**-8001T5L__	FW**A948XL__	–	–	48.9"	70.2"	24		XA-07871-5	193.00 [87.54]			
FW**-8301T1L__	–	XA-8311-T1	228.00 [103.42]	10.7"	42.2"	16	5.4"	XA-07871-1L	233.00 [105.69]		XA-7311	125.00 [56.70]
FW**-8301T2L__	–	XA-8311-T2	242.00 [109.77]	16.8"	50.2"	18		XA-07871-2L	145.00 [65.77]			
FW**-8301T3L__	–	XA-8311-T3	271.00 [122.92]	24.5"	55.2"	20		XA-07871-3L	168.00 [76.20]			
FW**-8301T4L__	–	XA-8311-T4	306.00 [138.80]	41.3"	74.2"	26		XA-07871-4L	187.00 [84.82]			
FW**-8009T2L__	–	XA-8301-T1	271.00 [122.92]	13.8"	42.2"	16	7.4"	XA-07871-2	248.00 [112.49]		XA-7019	142.00 [64.41]
FW**-8009T3L__	–	XA-8301-T2	302.00 [136.98]	19.9"	46.2"	16		XA-07871-3	140.00 [63.50]			
FW**-8009T4L__	–	XA-8301-T3	335.00 [151.95]	32.1"	58.2"	20		XA-07871-4	153.00 [69.40]			
FW**-8009T5L__	–	XA-8301-T4	375.00 [170.10]	44.4"	70.2"	24		XA-07871-5	193.00 [87.54]			

 Amendments and errors reserved. © SAF-HOLLAND, Inc.

Traditional Outboard Manual Release Part List

FW **-**** T* * **

Slide Bracket 8*** = Outboard	Slide Travel	L= Left R= Right	Options See FW Section

Example: FW35-8013T1L00

**AVAILABLE TOP PLATES	
FW35	FW8
FW31	FW83
FW33	FWS1
FW17	FW2000
FWAL	

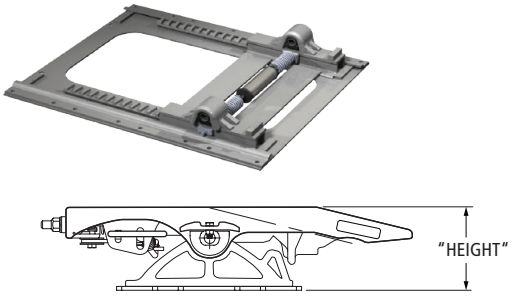

Height is measured from Face of Top Plate to Frame Rail

REF. FW PART NUMBER	REPLACED BY FW BASE PART NUMBER	SLIDE BASE AND BRACKET ASS'Y	SLIDE BASE AND BRACKET ASS'Y WEIGHT LBS [KG]	SLIDE TRAVEL	SLIDE BASE LENGTH	"A" # of HOLES	HEIGHT	SLIDE BASE PART NO. ITEM NO. 1	SLIDE BASE WEIGHT LBS [KG]	SLIDE BRACKET TYPE	SLIDE BRACKET PART NO. ITEM NO.2	SLIDE BRACKET WEIGHT LBS [KG]
FW**-8013T1L__	FW**A712XL__	–	–	10.7"	42.2"	16	3.9"	XA-07871-1L	233.00 [105.69]	MANUAL	XA-7013	116.00 [52.62]
FW**-8013T2L__	FW**A724XL__	–	–	16.8"	50.2"	18		XA-07871-2L	168.00 [76.20]			
FW**-8013T3L__	FW**A724XL__	–	–	24.5"	55.2"	20		XA-07871-3L	187.00 [84.82]			
FW**-8013T4L__	FW**A736XL__	–	–	41.3"	74.2"	26		XA-07871-4L	248.00 [112.49]			
FW**-8012T1L__	FW**A812XL__	–	–	12.2"	32.0"	12	4.9"	XA-07871-1	113.00 [51.26]		XA-7012	106.00 [48.08]
FW**-8012T2L__	FW**A824XL__	–	–	18.4"	42.2"	16		XA-07871-2	140.00 [63.50]			
FW**-8012T3L__	FW**A824XL__	–	–	24.5"	46.2"	16		XA-07871-3	153.00 [69.40]			
FW**-8012T4L__	FW**A836XL__	–	–	36.7"	58.2"	20		XA-07871-4	193.00 [87.54]			
FW**-8012T5L__	FW**A848XL__	–	–	48.9"	70.2"	24		XA-07871-5	233.00 [105.69]			
FW**-8011T1L__	FW**A912XL__	–	–	12.2"	32.0"	12	5.9"	XA-07871-1	113.00 [51.26]		XA-7011	111.00 [50.35]
FW**-8011T2L__	FW**A924XL__	–	–	18.0"	42.2"	16		XA-07871-2	140.00 [63.50]			
FW**-8011T3L__	FW**A924XL__	–	–	24.5"	46.2"	16		XA-07871-3	153.00 [69.40]			
FW**-8011T4L__	FW**A936XL__	–	–	36.7"	58.2"	20		XA-07871-4	193.00 [87.54]			
FW**-8011T5L__	FW**A948XL__	–	–	48.9"	70.2"	24		XA-07871-5	233.00 [105.69]			
FW**-8311T1L__	–	XA-8311-T1	272.00 [123.38]	10.7"	42.2"	16	5.40"	XA-07871-1L	145.00 [65.77]		XA-7301	134.00 [60.78]
FW**-8311T2L__	–	XA-8311-T2	297.00 [134.72]	16.8"	50.2"	18		XA-07871-2L	168.00 [76.20]			
FW**-8311T3L__	–	XA-8311-T3	323.00 [146.51]	24.5"	55.2"	20		XA-07871-3L	187.00 [84.82]			
FW**-8311T4L__	–	XA-8311-T4	363.00 [164.65]	41.3"	74.2"	26		XA-07871-4L	248.00 [112.49]			
FW**-8019T2L__	–	XA-8019-T2	264.00 [119.75]	13.8"	42.2"	16	7.40"	XA-07871-2	140.00 [63.50]		XA-7009	145.00 [65.77]
FW**-8019T3L__	–	XA-8019-T3	295.00 [133.81]	19.9"	46.2"	16		XA-07871-3	153.00 [69.40]			
FW**-8019T4L__	–	XA-8019-T4	328.00 [148.78]	32.1"	58.2"	20		XA-07871-4	193.00 [87.54]			
FW**-8019T5L__	–	XA-8019-T5	368.00 [166.92]	44.4"	70.2"	24		XA-07871-5	233.00 [105.69]			

** Fifth wheel model number.
__ See option code per fifth wheel assembly.

Amendments and errors reserved. © SAF-HOLLAND, Inc.

THIS PAGE INTENTIONALLY LEFT BLANK

 Amendments and errors reserved. © SAF-HOLLAND, Inc.

Traditional Inboard for Angle Exploded View

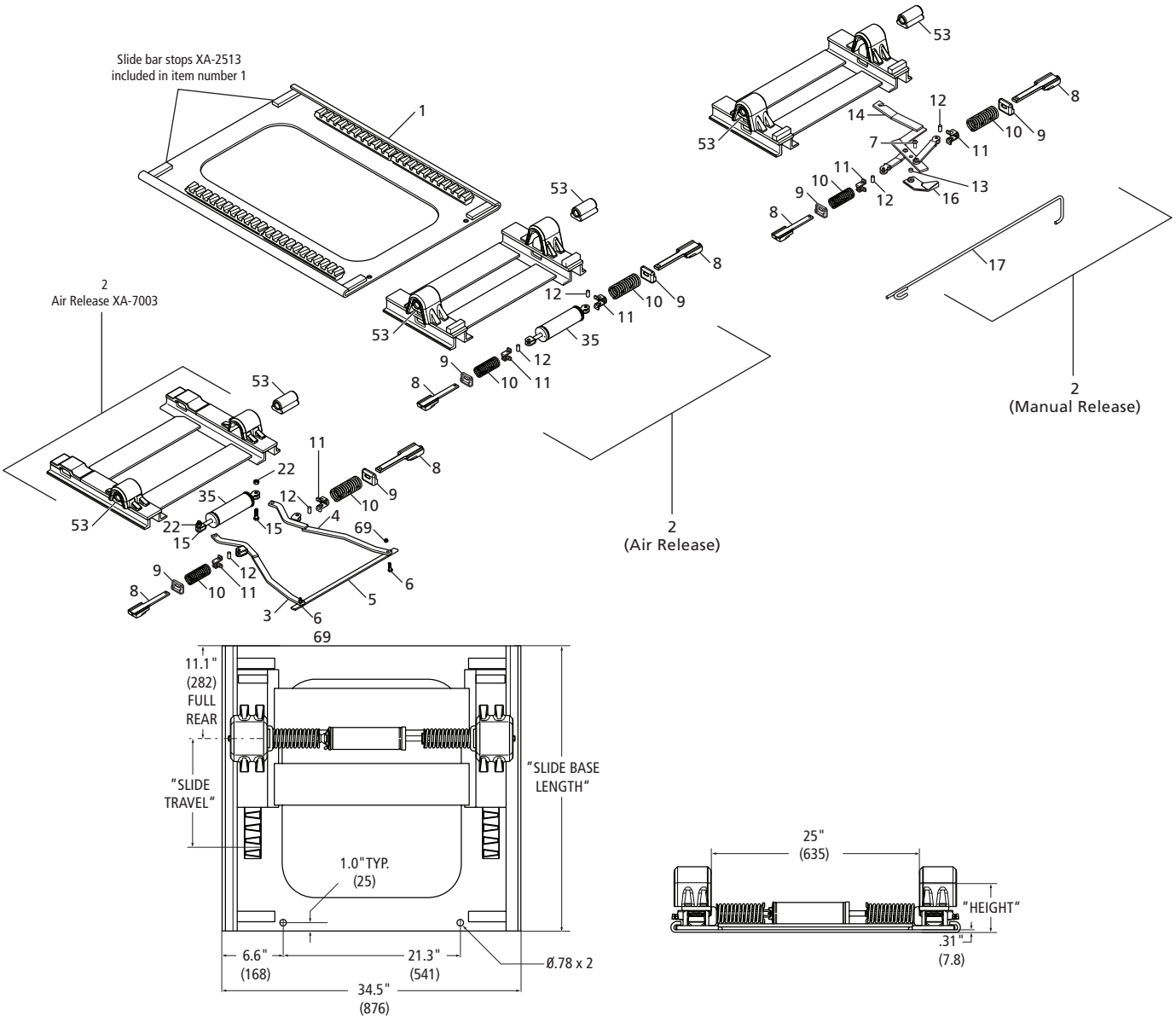

TRADITIONAL INBOARD SERIES PARTS LIST

ITEM	DESCRIPTION	PART NUMBER	QTY	WEIGHT LBS [KG]
3	Lever, Left-Hand	XA-0708-A	1	3.10 [1.41]
4	Lever, Right-Hand	XA-0709-A	1	3.10 [1.41]
5	Bar, Tie	XA-0712	1	1.80 [0.82]
6	HHCS .38"-16 x 1.25", Plated	XB-C-375-C-125	2	0.04 [0.02]
7	SBHCS, .50"- 13 x 1.25"	XB-03730-1	1	0.10 [0.05]
8	Shoe Assembly	XA-0372-A	2	3.10 [1.41]
9	Stop, Spring	XA-01586	2	0.34 [0.15]
10	Spring	XB-2502	2	1.03 [0.47]
11	Retainer, Spring	XA-2501	2	0.24 [0.11]
12	Pin, .50" Diameter x 1.12"	XA-2503	2	0.06 [0.03]

TRADITIONAL INBOARD SERIES PARTS LIST

ITEM	DESCRIPTION	PART NUMBER	QTY	WEIGHT LBS [KG]
13	Bushing, .50" I.D. x .68" O.D. x .44"	XA-03082	1	0.02 [0.01]
14	Lever Assembly, Release	XA-03748	1	7.30 [3.31]
15	HHCS, .50"-20 x 1.75" Gr 5	XB-2083	2	0.13 [0.06]
16	Plate Assembly, Pivot	XA-02748-1	1	1.50 [0.68]
17	Hook Assembly, Release	XA-0756	1	1.40 [0.64]
22	Lock Nut, .50"-20 Gr C	XB-T-69-A	2	0.04 [0.02]
35	Cylinder Assembly, Air	XA-2524-R	1	5.34 [2.42]
53	Cushion, Rubber	XB-0011-2	2	0.60 [0.27]
69	Lock Nut, .38"-16 Gr B	XB-338	2	0.02 [0.01]

XL-FW10081PM-en-US Rev D 2016-03-01
Amendments and errors reserved. © SAF-HOLLAND, Inc.

FW **-**** X * * **

Slide Bracket 7*** = Inboard	X= No Angle	Slide Travel	L= Left R= Right	Options See FW Section

Example: FW35-7003X1L00

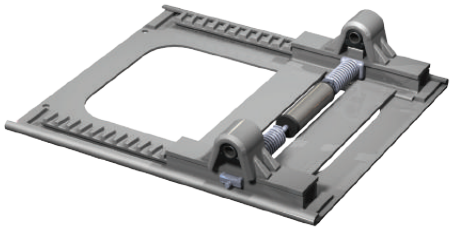

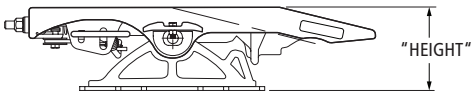

Height is measured from Face of Top Plate to Frame Rail

**AVAILABLE TOP PLATES	
FW35	FW8
FW31	FW83
FW33	FWS1
FW17	FW2000
FWAL	

REF. FW PART NO.	REPLACED BY FW BASE PART NUMBER	SLIDE BASE AND BRACKET ASS'Y	SLIDE BASE AND BRACKET ASS'Y WEIGHT LBS [KG]	SLIDE TRAVEL	SLIDE BASE LENGTH	HEIGHT	SLIDE BASE PART NO. ITEM NO. 1	SLIDE BASE WEIGHT LBS [KG]	SLIDE BRACKET TYPE	SLIDE BRACKET PART NO. ITEM NO.2	SLIDE BRACKET WEIGHT LBS [KG]
FW**-7003X1L__	FW**B712XL__	–	–	10.7"	38.9"	3.9"	XA-0751-1	104.00 [47.17]	AIR	XA-7003	125.00 [56.70]
FW**-7003X2L__	FW**B724XL__	–	–	16.8"	45.0"		XA-0751-2	120.00 [54.43]			
FW**-7003X3L__	FW**B724XL__	–	–	24.5"	52.6"		XA-0751-3A	138.00 [62.60]			
FW**-7003X4L__	FW**B736XL__	–	–	41.3"	69.5"		XA-0751-4	169.00 [76.66]			
FW**-7003X5L__	FW**B748XL__	–	–	53.6"	82.0"		XA-0751-5	210.00 [95.25]			
FW**-7003X6L__	–	XA-7003-X6	373.00 [169.19]	65.8"	94.0"		XA-0751-6	285.00 [129.27]			
FW**-7002X1L__	FW**B812XL__	–	–	12.2"	32.8"	4.9"	XA-0750-1	127.00 [57.61]		XA-7002	107.00 [48.53]
FW**-7002X2L__	FW**B824XL__	–	–	18.4"	38.9"		XA-0750-2	155.00 [70.31]			
FW**-7002X3L__	FW**B824XL__	–	–	24.5"	45.0"		XA-0750-3	180.00 [81.65]			
FW**-7002X4L__	FW**B836XL__	–	–	36.7"	57.2"		XA-0750-4	233.00 [105.69]			
FW**-7002X5L__	FW**B848XL__	–	–	48.9"	69.5"		XA-0750-5	286.00 [129.73]			
FW**-7002X6L__	–	XA-7002-X6	503.00 [228.16]	61.2"	82.0"		XA-0750-6	344.00 [156.04]			
FW**-7002X7L__	–	XA-7002-X7	523.00 [237.23]	73.4"	94.0"		XA-0750-7	396.00 [179.62]			
FW**-7001X1L__	FW**B912XL__	–	–	12.2"	32.8"	5.9"	XA-0750-1	127.00 [57.61]		XA-7001	113.00 [51.26]
FW**-7001X2L__	FW**B924XL__	–	–	18.4"	38.9"		XA-0750-2	155.00 [70.31]			
FW**-7001X3L__	FW**B924XL__	–	–	24.5"	45.0"		XA-0750-3	180.00 [81.65]			
FW**-7001X4L__	FW**B936XL__	–	–	36.7"	57.2"		XA-0750-4	233.00 [105.69]			
FW**-7001X5L__	FW**B948XL__	–	–	48.9"	69.5"		XA-0750-5	286.00 [129.73]			
FW**-7001X6L__	–	XA-7001-X6	500.00 [226.80]	61.2"	82.0"		XA-0750-6	344.00 [156.04]			
FW**-7301X1L__	–	XA-7301-X1	246.00 [111.58]	10.7"	38.9"	8.2"	XA-0751-1	104.00 [47.17]		XA-7301	134.00 [60.78]
FW**-7301X2L__	–	XA-7301-X2	264.00 [119.75]	16.8"	45.0"		XA-0751-2	120.00 [54.43]			
FW**-7301X3L__	–	XA-7301-X3	294.00 [133.36]	24.5"	52.6"		XA-0751-3A	138.00 [62.60]			
FW**-7301X4L__	–	XA-7301-X4	318.00 [144.24]	41.3"	69.5"		XA-0751-4	169.00 [76.66]			
FW**-7301X5L__	–	XA-7301-X5	358.00 [162.39]	53.6"	82.0"		XA-0751-5	210.00 [95.25]			
FW**-7301X6L__	–	XA-7301-X6	378.00 [171.46]	65.8"	94.0"		XA-0751-6	285.00 [129.27]			
FW**-7009X2L__	–	XA-7009-X2	307.00 [139.25]	13.8"	38.9"	10.2"	XA-0750-2	155.00 [70.31]		XA-7009	145.00 [65.77]
FW**-7009X3L__	–	XA-7009-X3	321.00 [145.60]	19.9"	45.0"		XA-0750-3	180.00 [81.65]			
FW**-7009X4L__	–	XA-7009-X4	373.00 [169.19]	32.1"	57.2"		XA-0750-4	233.00 [105.69]			
FW**-7009X5L__	–	XA-7009-X5	428.00 [194.14]	44.4"	69.5"		XA-0750-5	286.00 [129.73]			
FW**-7009X6L__	–	XA-7009-X6	478.00 [216.82]	56.6"	82.0"		XA-0750-6	344.00 [156.04]			

** Fifth wheel model number.
__ See option code per fifth wheel assembly.

 Amendments and errors reserved. © SAF-HOLLAND, Inc.

FW	* * -	* * * *	X	*	*	* *
		Slide Bracket 7*** = Inboard	X= No Angle	Slide Travel	L= Left R= Right	Options See FW Section

Example: FW35-7013X1L00

**AVAILABLE TOP PLATES	
FW35	FW8
FW31	FW83
FW33	FWS1
FW17	FW2000
FWAL	

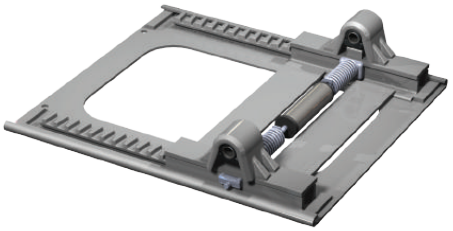

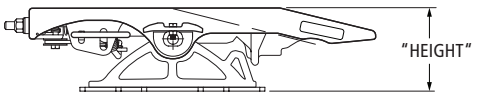

Height is measured from Face of Top Plate to Frame Rail

REF. FW PART NO.	REPLACED BY FW BASE PART NUMBER	SLIDE BASE AND BRACKET ASS'Y	SLIDE BASE AND BRACKET ASS'Y WEIGHT LBS [KG]	SLIDE TRAVEL	SLIDE BASE LENGTH	HEIGHT	SLIDE BASE PART NO. ITEM NO. 1	SLIDE BASE WEIGHT LBS [KG]	SLIDE BRACKET TYPE	SLIDE BRACKET PART NO. ITEM NO.2	SLIDE BRACKET WEIGHT LBS [KG]
FW**-7013X1L__	FW**B712XL__	–	–	10.7"	38.9"	3.9"	XA-0751-1	104.00 [47.17]	MANUAL	XA-7013	116.00 [52.62]
FW**-7013X2L__	FW**B724XL__	–	–	16.8"	45.0"		XA-0751-2	120.00 [54.43]			
FW**-7013X3L__	FW**B724XL__	–	–	24.5"	52.6"		XA-0751-3A	138.00 [62.60]			
FW**-7013X4L__	FW**B736XL__	–	–	41.3"	69.5"		XA-0751-4	169.00 [76.66]			
FW**-7013X5L__	FW**B748XL__	–	–	53.6"	82.0"		XA-0751-5	210.00 [95.25]			
FW**-7013X6L__	–	XA-7013-X6	435.00 [197.31]	65.8"	94.0"		XA-0751-6	285.00 [129.27]			
FW**-7012X1L__	FW**B812XL__	–	–	12.2"	32.8"	4.9"	XA-0750-1	127.00 [57.61]		XA-7012	106.00 [48.08]
FW**-7012X2L__	FW**B824XL__	–	–	18.4"	38.9"		XA-0750-2	155.00 [70.31]			
FW**-7012X3L__	FW**B824XL__	–	–	24.5"	45.0"		XA-0750-3	180.00 [81.65]			
FW**-7012X4L__	FW**B836XL__	–	–	36.7"	57.2"		XA-0750-4	233.00 [105.69]			
FW**-7012X5L__	FW**B848XL__	–	–	48.9"	69.5"		XA-0750-5	286.00 [129.73]			
FW**-7012X6L__	–	XA-7012-X6	455.00 [206.38]	61.2"	82.0"		XA-0750-6	344.00 [156.04]			
FW**-7011X1L__	FW**B912XL__	–	–	12.2"	32.8"	5.9"	XA-0750-1	127.00 [57.61]		XA-7011	111.00 [50.35]
FW**-7011X2L__	FW**B924XL__	–	–	18.4"	38.9"		XA-0750-2	155.00 [70.31]			
FW**-7011X3L__	FW**B924XL__	–	–	24.5"	45.0"		XA-0750-3	180.00 [81.65]			
FW**-7011X4L__	FW**B936XL__	–	–	36.7"	57.2"		XA-0750-4	233.00 [105.69]			
FW**-7011X5L__	FW**B948XL__	–	–	48.9"	69.5"		XA-0750-5	286.00 [129.73]			
FW**-7011X6L__	–	XA-7011-X6	505.00 [229.06]	61.2"	82.0"		XA-0750-6	344.00 [156.04]			
FW**-7311X1L__	–	XA-7311-X1	245.00 [111.13]	10.7"	38.9"	8.2"	XA-0751-1	104.00 [47.17]		XA-7311	125.00 [56.70]
FW**-7311X2L__	–	XA-7311-X2	363.00 [164.65]	16.8"	45.0"		XA-0751-2	120.00 [54.43]			
FW**-7311X3L__	–	XA-7311-X3	343.00 [155.58]	24.5"	52.6"		XA-0751-3A	138.00 [62.60]			
FW**-7311X4L__	–	XA-7311-X4	322.00 [146.06]	41.3"	69.5"		XA-0751-4	169.00 [76.66]			
FW**-7311X5L__	–	XA-7311-X5	362.00 [164.20]	53.6"	82.0"		XA-0751-5	210.00 [95.25]			
FW**-7311X6L__	–	XA-7311-X6	382.00 [173.27]	65.8"	94.0"		XA-0751-6	285.00 [129.27]			
FW**-7019X2L__	–	–	–	13.8"	38.9"	10.2"	XA-0750-2	155.00 [70.31]		XA-7019	142.00 [64.41]
FW**-7019X3L__	–	–	–	19.9"	45.0"		XA-0750-3	180.00 [81.65]			
FW**-7019X4L__	–	–	–	32.1"	57.2"		XA-0750-4	233.00 [105.69]			
FW**-7019X5L__	–	–	–	44.4"	69.5"		XA-0750-5	286.00 [129.73]			
FW**-7019X6L__	–	–	–	56.6"	82.0"		XA-0750-6	344.00 [156.04]			

 Amendments and errors reserved. © SAF-HOLLAND, Inc.

THIS PAGE INTENTIONALLY LEFT BLANK

 Amendments and errors reserved. © SAF-HOLLAND, Inc.

Traditional Inboard with Angle Exploded View

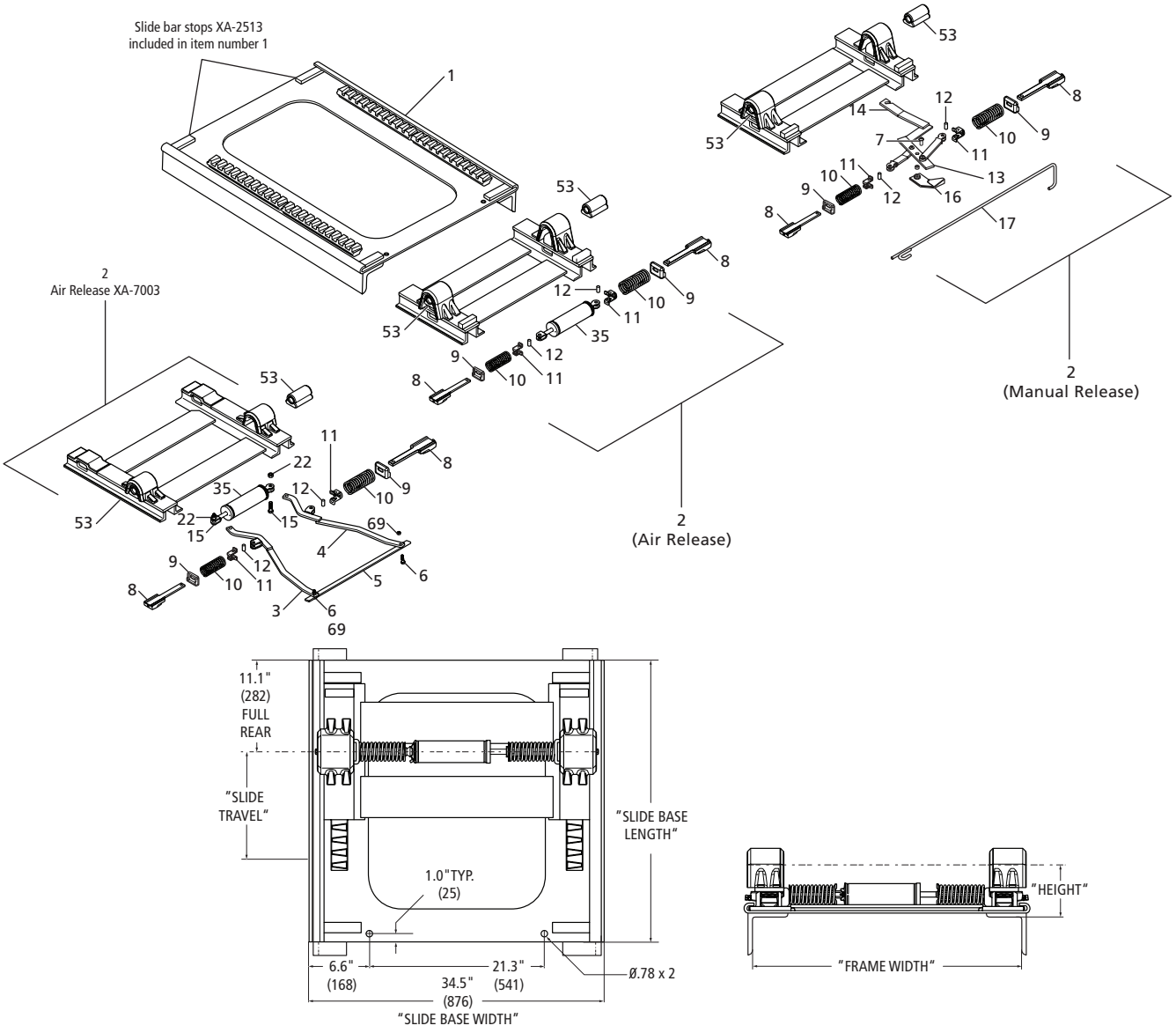

TRADITIONAL INBOARD SERIES PARTS LIST

ITEM	DESCRIPTION	PART NUMBER	QTY	WEIGHT LBS [KG]
3	Lever, Left-Hand	XA-0708-A	1	3.10 [1.41]
4	Lever, Right-Hand	XA-0709-A	1	3.10 [1.41]
5	Bar, Tie	XA-0712	1	1.80 [0.82]
6	HHCS .38"-16 x 1.25", Plated	XB-C-375-C-125	2	0.04 [0.02]
7	SBHCS, .50"- 13 x 1.25"	XB-03730-1	1	0.10 [0.05]
8	Shoe Assembly	XA-0372-A	2	3.10 [1.41]
9	Stop, Spring	XA-01586	2	0.34 [0.15]
10	Spring	XB-2502	2	1.03 [0.47]
11	Retainer, Spring	XA-2501	2	0.24 [0.11]
12	Pin, .50" Diameter x 1.12"	XA-2503	2	0.06 [0.03]

TRADITIONAL INBOARD SERIES PARTS LIST

ITEM	DESCRIPTION	PART NUMBER	QTY	WEIGHT LBS [KG]
13	Bushing, .50" I.D. x .68" O.D. x .44"	XA-03082	1	0.02 [0.01]
14	Lever Assembly, Release	XA-03748	1	7.30 [3.31]
15	HHCS, .50"-20 x 1.75" Gr 5	XB-2083	2	0.13 [0.06]
16	Plate Assembly, Pivot	XA-02748-1	1	1.50 [0.68]
17	Hook Assembly, Release	XA-0756	1	1.40 [0.64]
22	Lock Nut, .50"-20 Gr C	XB-T-69-A	2	0.04 [0.02]
35	Cylinder Assembly, Air	XA-2524-R	1	5.34 [2.42]
53	Cushion, Rubber	XB-0011-2	2	0.60 [0.27]
69	Lock Nut, .38"-16 Gr B	XB-338	2	0.02 [0.01]

XL-FW10081PM-en-US Rev D 2016-03-01
Amendments and errors reserved. © SAF-HOLLAND, Inc.

FW **-**** X * * **

Slide Bracket 7*** = Inboard	Frame Width (See chart)	Slide Travel	L= Left R= Right	Options (See Code Chart)

Example: FW35-7003G1L00

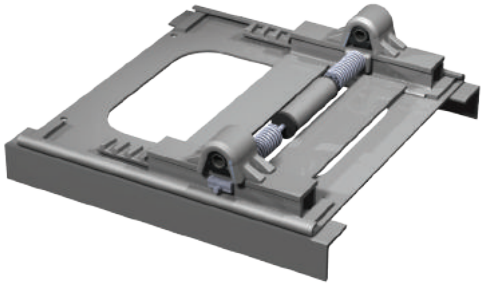

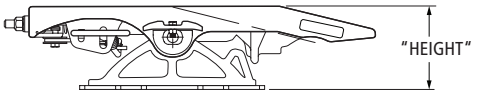

Height is measured from Face of Top Plate to Frame Rail

**AVAILABLE TOP PLATES	
FW35	FW8
FW31	FW83
FW33	FWS1
FW17	FW2000
FWAL	

REF. FW PART NO.	REPLACED BY FW BASE PART NUMBER	SLIDE BASE AND BRACKET ASS'Y	SLIDE BASE AND BRACKET ASS'Y WEIGHT LBS [KG]	SLIDE TRAVEL	SLIDE BASE LENGTH	HEIGHT	SLIDE BASE PART NO. ITEM NO. 1	SLIDE BASE WEIGHT LBS [KG]	SLIDE BRACKET TYPE	SLIDE BRACKET PART NO. ITEM NO.2	SLIDE BRACKET WEIGHT LBS [KG]
FW**-7003G1L__	FW**B712XL__	–	–	10.7"	38.9"	4.2"	XA-0753-G1-__	172.00 [78.02]	AIR	XA-7003	125.00 [56.70]
FW**-7003G2L__	FW**B724XL__	–	–	16.8"	45.0"		XA-0753-G2-__	196.00 [88.90]			
FW**-7003G3L__	FW**B724XL__	–	–	24.5"	52.6"		XA-0753-G3A-__	229.00 [103.87]			
FW**-7003G4L__	FW**B736XL__	–	–	41.3"	69.5"		XA-0753-G4-__	287.00 [130.18]			
FW**-7003G5L__	FW**B748XL__	–	–	53.6"	82.0"		XA-0753-G5-__	368.00 [166.92]			
FW**-7003G6L__	–	XA-7003-G6-__	553.00 [250.84]	65.8"	94.0"		XA-0753-G6-__	443.00 [200.94]			
FW**-7002G1L__	FW**B812XL__	–	–	12.2"	32.8"	5.2"x	XA-0752-G1-__	185.00 [83.91]		XA-7002	107.00 [48.53]
FW**-7002G2L__	FW**B824XL__	–	–	18.4"	38.9"		XA-0752-G2-__	234.00 [106.14]			
FW**-7002G3L__	FW**B824XL__	–	–	24.5"	45.0"		XA-0752-G3-__	256.00 [116.12]			
FW**-7002G4L__	FW**B836XL__	–	–	36.7"	57.2"		XA-0752-G4-__	328.00 [148.78]			
FW**-7002G5L__	FW**B848XL__	–	–	48.9"	69.5"		XA-0752-G5-__	403.00 [182.80]			
FW**-7002G6L__	–	XA-7002-G6-__	584.00 [264.90]	61.2"	82.0"		XA-0752-G6-__	474.00 [215.00]			
FW**-7001G1L__	FW**B912XL__	–	–	12.2"	32.8"	6.2"	XA-0752-G1-__	185.00 [83.91]		XA-7001	113.00 [51.26]
FW**-7001G2L__	FW**B924XL__	–	–	18.4"	38.9"		XA-0752-G2-__	234.00 [106.14]			
FW**-7001G3L__	FW**B924XL__	–	–	24.5"	45.0"		XA-0752-G3-__	256.00 [116.12]			
FW**-7001G4L__	FW**B936XL__	–	–	36.7"	57.2"		XA-0752-G4-__	328.00 [148.78]			
FW**-7001G5L__	FW**B948XL__	–	–	48.9"	69.5"		XA-0752-G5-__	403.00 [182.80]			
FW**-7001G6L__	–	XA-7001-G6-__	586.00 [265.81]	61.2"	82.0"		XA-0752-G6-__	474.00 [215.00]			
FW**-7301G1L__	–	XA-7301-G1-__	301.00 [136.53]	10.7"	38.9"	5.8"	XA-0753-G1-__	174.00 [78.93]		XA-7301	134.00 [60.78]
FW**-7301G2L__	–	XA-7301-G2-__	337.00 [152.86]	16.8"	45.0"		XA-0753-G2-__	198.00 [89.81]			
FW**-7301G3L__	–	XA-7301-G3-__	402.00 [182.34]	24.5"	52.6"		XA-0753-G3-__	249.00 [112.94]			
FW**-7301G4L__	–	XA-7301-G4-__	444.00 [201.40]	41.3"	69.5"		XA-0753-G4-__	289.00 [131.09]			
FW**-7301G5L__	–	XA-7301-G5-__	499.00 [226.34]	53.6"	82.0"		XA-0753-G5-__	370.00 [167.83]			
FW**-7301G6L__	–	XA-7301-G6-__	515.00 [233.60]	65.8"	94.0"		XA-0753-G6-__	445.00 [201.85]			
FW**-7009G2L__	–	XA-7009-G2-__	377.00 [171.00]	13.8"	38.9"	7.7"	XA-0752-G2-__	234.00 [106.14]		XA-7009	145.00 [65.77]
FW**-7009G3L__	–	XA-7009-G3-__	399.00 [180.98]	19.9"	45.0"		XA-0752-G3-__	256.00 [116.12]			
FW**-7009G4L__	–	XA-7009-G4-__	471.00 [213.64]	32.1"	57.2"		XA-0752-G4-__	328.00 [148.78]			
FW**-7009G5L__	–	XA-7009-G5-__	546.00 [247.66]	44.4"	69.5"		XA-0752-G5-__	403.00 [182.80]			
FW**-7009G6L__	–	XA-7009-G6-__	617.00 [279.87]	56.6"	82.0"		XA-0752-G6-__	474.00 [215.00]			
FW**-7009G7L__	–	XA-7009-G7-__	656.00 [297.56]	68.8"	94.0"		XA-0752-G7-__	560.00 [254.01]			

** Fifth wheel model number.
__ See option code per fifth wheel assembly.

 Amendments and errors reserved. © SAF-HOLLAND, Inc.

Traditional Inboard with Angle Manual Release Parts List

SAF-HOLLAND Group

FW **-**** X * * **

Slide Bracket 7*** = Inboard	Frame Width (See chart)	Slide Travel	L= Left R= Right	Options (See Code Chart)

Example: FW35-7013G1L00

**AVAILABLE TOP PLATES	
FW35	FW8
FW31	FW83
FW33	FWS1
FW17	FW2000
FWAL	

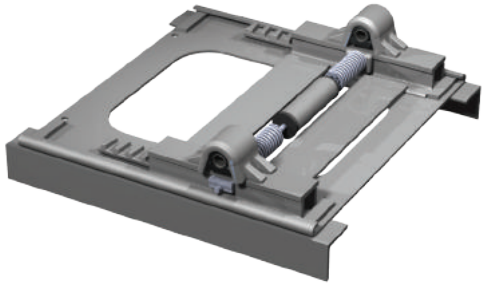

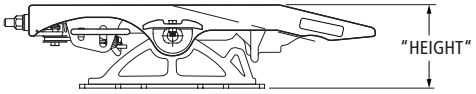

Height is measured from Face of Top Plate to Frame Rail

REF. FW PART NO.	REPLACED BY FW BASE PART NUMBER	SLIDE BASE AND BRACKET ASS'Y	SLIDE BASE AND BRACKET ASS'Y WEIGHT LBS [KG]	SLIDE TRAVEL	SLIDE BASE LENGTH	HEIGHT	SLIDE BASE PART NO. ITEM NO. 1	SLIDE BASE WEIGHT LBS [KG]	SLIDE BRACKET TYPE	SLIDE BRACKET PART NO. ITEM NO.2	SLIDE BRACKET WEIGHT LBS [KG]
FW**-7013G1L__	FW**B712XL__	–	–	10.7"	38.9"	4.2"	XA-0753-G1-__	172.00 [78.02]	MANUAL	XA-7013	116.00 [52.62]
FW**-7013G2L__	FW**B724XL__	–	–	16.8"	45.0"		XA-0753-G2-__	196.00 [88.90]			
FW**-7013G3L__	FW**B724XL__	–	–	24.5"	52.6"		XA-0753-G3A-__	229.00 [103.87]			
FW**-7013G4L__	FW**B736XL__	–	–	41.3"	69.5"		XA-0753-G4-__	287.00 [130.18]			
FW**-7013G5L__	FW**B748XL__	–	–	53.6"	82.0"		XA-0753-G5-__	368.00 [166.92]			
FW**-7013G6L__	–	XA-7013-G6-__	520.00 [235.87]	65.8"	94.0"		XA-0753-G6-__	443.00 [200.94]			
FW**-7012G1L__	FW**B812XL__	–	–	12.2"	32.8"	5.2"	XA-0752-G1-__	185.00 [83.91]		XA-7012	106.00 [48.08]
FW**-7012G2L__	FW**B824XL__	–	–	18.4"	38.9"		XA-0752-G2-__	234.00 [106.14]			
FW**-7012G3L__	FW**B824XL__	–	–	24.5"	45.0"		XA-0752-G3-__	256.00 [116.12]			
FW**-7012G4L__	FW**B836XL__	–	–	36.7"	57.2"		XA-0752-G4-__	328.00 [148.78]			
FW**-7012G5L__	FW**B848XL__	–	–	48.9"	69.5"		XA-0752-G5-__	403.00 [182.80]			
FW**-7012G6L__		XA-7012-G6-__	592.00 [268.53]	61.2"	82.0"		XA-0752-G6-__	474.00 [215.00]			
FW**-7011G1L__	FW**B912XL__	–	–	12.2"	32.8"	6.2"	XA-0752-G1-__	185.00 [83.91]		XA-7011	111.00 [50.35]
FW**-7011G2L__	FW**B924XL__	–	–	18.4"	38.9"		XA-0752-G2-__	234.00 [106.14]			
FW**-7011G3L__	FW**B924XL__	–	–	24.5"	45.0"		XA-0752-G3-__	256.00 [116.12]			
FW**-7011G4L__	FW**B936XL__	–	–	36.7"	57.2"		XA-0752-G4-__	328.00 [148.78]			
FW**-7011G5L__	FW**B948XL__	–	–	48.9"	69.5"		XA-0752-G5-__	403.00 [182.80]			
FW**-7011G6L__	–	XA-7011-G6-__	599.00 [271.70]	61.2"	82.0"		XA-0752-G6-__	474.00 [215.00]			
FW**-7311G1L__	–	XA-7311-G1-__	305.00 [138.35]	10.7"	38.9"	5.8"	XA-0753-G1-__	174.00 [78.93]		XA-7311	125.00 [56.70]
FW**-7311G2L__	–	XA-7311-G2-__	347.00 [157.40]	16.8"	45.0"		XA-0753-G2-__	198.00 [89.81]			
FW**-7311G3L__	–	XA-7311-G3-__	410.00 [185.97]	24.5"	52.6"		XA-0753-G3-__	249.00 [112.94]			
FW**-7311G4L__	–	XA-7311-G4-__	443.00 [200.94]	41.3"	69.5"		XA-0753-G4-__	289.00 [131.09]			
FW**-7311G5L__	–	XA-7311-G5-__	498.00 [225.89]	53.6"	82.0"		XA-0753-G5-__	370.00 [167.83]			
FW**-7311G6L__	–	XA-7311-G6-__	518.00 [234.96]	65.8"	94.0"		XA-0753-G6-__	445.00 [201.85]			
FW**-7019G2L__	–	–	–	13.8"	38.9"	7.7"	XA-0752-G2-__	236.00 [107.05]		XA-7019	142.00 [64.41]
FW**-7019G3L__	–	–	–	19.9"	45.0"		XA-0752-G3-__	258.00 [117.03]			
FW**-7019G4L__	–	–	–	32.1"	57.2"		XA-0752-G4-__	330.00 [149.69]			
FW**-7019G5L__	–	–	–	44.4"	69.5"		XA-0752-G5-__	405.00 [183.70]			
FW**-7019G6L__	–	–	–	56.6"	82.0"		XA-0752-G6-__	476.00 [215.91]			
FW**-7019G7L__	–	–	–	68.8"	94.0"		XA-0752-G7-__	560.00 [254.01]			

 Amendments and errors reserved. © SAF-HOLLAND, Inc.

FRAME WIDTH CODE CHART					
FRAME CODE	FRAME WIDTH	ANGLE SIZE	FRAME CODE	FRAME WIDTH	ANGLE SIZE
A	33.25"	.38" x 4" x 4"	K	34.38"	.38" x 4" x 4"
B	33.38"	.38" x 4" x 4"	L	34.50"	.38" x 4" x 4"
C	33.50"	.38" x 4" x 4"	M	34.62"	.38" x 5" x 5"
D	33.62"	.38" x 4" x 4"	N	34.75"	.38" x 5" x 5"
E	33.75"	.38" x 4" x 4"	P	34.88"	.38" x 5" x 5"
F	33.88"	.38" x 4" x 4"	Q	35.00"	.38" x 5" x 5"
G+	**34.00"**	**.38" x 4" x 4"**	R	35.12"	.38" x 5" x 5"
H	34.12"	.38" x 4" x 4"	S	35.25"	.38" x 5" x 5"
J	34.25	.38" x 4" x 4"			

OPTION CODE CHART	
OPTION CODE (__)	MOUNTING ANGLE SIZE
Blank/00	See Frame Width Chart
21	.38" x 5" x 5"
51	.38" x 4" x 6"
57	.31" x 3.5" x 4"
65	.31" x 4" x 4"

 Amendments and errors reserved. © SAF-HOLLAND, Inc.

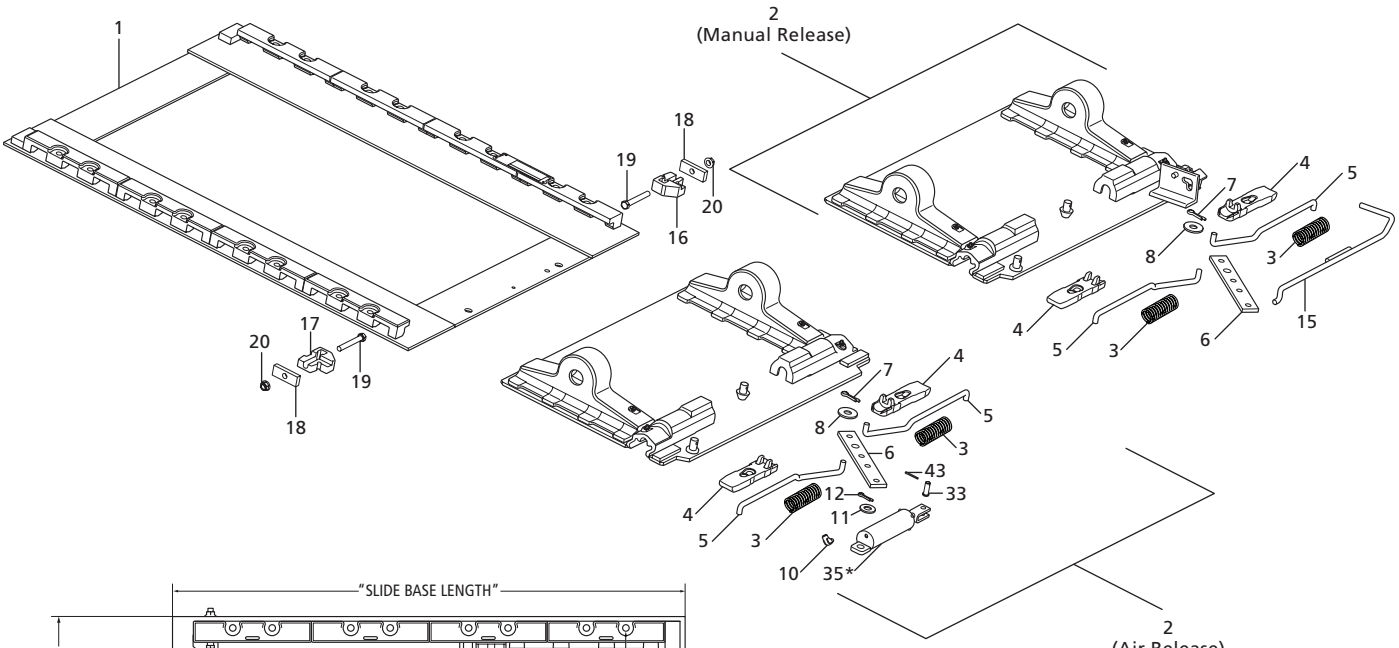

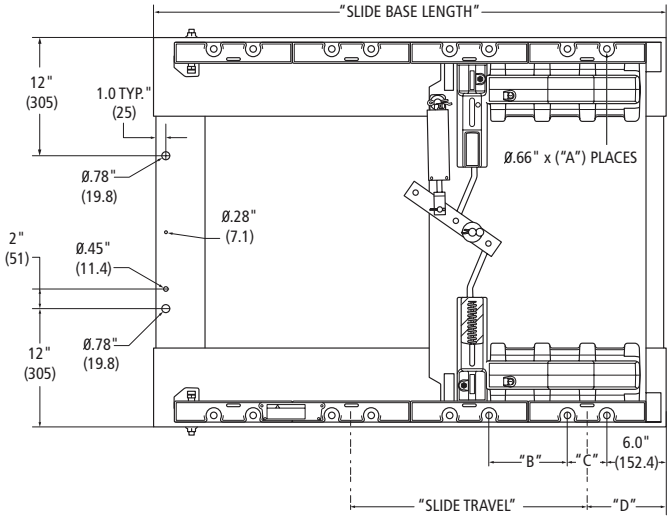



SIMPLEX TAPERLOC SERIES PARTS LIST

ITEM	DESCRIPTION	PART NUMBER	QTY.	WEIGHT LBS [KG]
3	Spring	1200035	2	0.43 [0.20]
4	Pin, Lock	4300007	2	2.84 [1.29]
5	Rod, Operating Linkage	4300822	2	0.97 [0.44]
6	Lever, Operating Linkage	4300818	1	1.86 [0.84]
7	Pin, Clinch	9900172	1	0.03 [0.01]
8	Washer, .81"I.D. x 2"O.D.	22316	1	0.12 [0.05]
10	Fitting, 90° Air	2100011	1	0.07 [0.03]
11	Washer, .81"I.D. x 1.5"O.D.	9901263	1	0.06 [0.03]
12	Pin, Cotter, .19" Diameter x 1.25" Long	9900170	1	0.01 [0.005]

** - Accepts .25" O.D. Plastic Tubing

SIMPLEX TAPERLOC SERIES PARTS LIST

ITEM	DESCRIPTION	PART NUMBER	QTY.	WEIGHT LBS [KG]
15	Rod, Manual Operating	4300012	1	1.68 [0.76]
16	Stop, Left-Hand Front, See 4300209	4300043	1	1.64 [0.74]
17	Stop, Right-Hand Front, See 4300209	4300042	1	1.64 [0.74]
18	Plate	4300044	2	0.45 [0.20]
19	HHCS, .50"-13 x 3.75"	9900145	2	0.25 [0.11]
20	Nut, .50"-13,Flange Lock Grade 2	9900146	2	0.29 [0.13]
33	Pin, Clevis, .49" Diameter x 1.36" Long	5400219	1	0.08 [0.04]
35*	**Air Cylinder, See 4300162	4300145	1	2.12 [0.96]
43	Pin, Cotter, .13" Diameter x 1.25" Long	84261	1	0.01 [0.005]

XL-FW10081PM-en-US Rev D 2016-03-01 Amendments and errors reserved. © SAF-HOLLAND, Inc.

SLIDE BASE AND BRACKET ASS'Y	SLIDE BASE AND BRACKET ASS'Y WEIGHT LBS [KG]	SLIDE TRAVEL	SLIDE BASE LENGTH	A # of Holes	B	C	D	HEIGHT	SLIDE BASE PART NO. ITEM NO. 1	SLIDE BASE WEIGHT LBS [KG]	SLIDE BRACKET TYPE	SLIDE BRACKET PART NO. ITEM NO.2	SLIDE BRACKET WEIGHT LBS [KG]
4302101	237.00 [107.50]	12"	40"	12	8"	4"	8"	6.81"	4300147	98.60 [44.72]	AIR	4300165	144.30 [65.45]
4302106	245.00 [111.13]	16"	44"	12	4"	8"			4300190	107.30 [48.67]			
4302102	260.00 [117.93]	24"	52"	16	8"	4"			4300009	123.30 [55.93]			
4302103	281.00 [127.46]	36"	64"	20	8"	4"			4300039	147.90 [67.09]			
4302104	312.00 [141.52]	49"	76"	24	8"	4"			4300046	181.70 [82.42]			
4302111	244.00 [110.68]	12"	40"	12	8"	4"	10"	7.75"	4300147	98.60 [44.72]		4300166	148.10 [67.18]
4302116	252.00 [114.31]	16"	44"	12	4"	8"			4300190	107.30 [48.67]			
4302112	267.20 [121.20]	24"	52"	16	8"	4"			4300009	123.30 [55.93]			
4302113	288.00 [130.63]	36"	64"	20	8"	4"			4300039	147.90 [67.09]			
4302114	319.00 [144.70]	49"	76"	24	8"	4"			4300046	181.70 [82.42]			
4302121	248.00 [112.49]	12"	40"	12	8"	4"	10"	8.75"	4300147	98.60 [44.72]		4300167	139.30 [63.19]
4302126	256.00 [116.12]	16"	44"	12	4"	8"			4300190	107.30 [48.67]			
4302122	271.00 [122.92]	24"	52"	16	8"	4"			4300009	123.30 [55.93]			
4302123	292.00 [132.45]	36"	64"	20	8"	4"			4300039	147.90 [67.09]			
4302124	323.00 [146.51]	49"	76"	24	8"	4"			4300046	181.70 [82.42]			
4302055	264.20 [119.84]	12"	40"	12	8"	4"	10"	9.75"	4300147	98.60 [44.72]		4300172	151.90 [68.90]
4302057	272.00 [123.38]	16"	44"	12	4"	8"			4300190	107.30 [48.67]			
4302058	278.00 [126.10]	24"	52"	16	8"	4"			4300009	123.30 [55.93]			
4302059	308.00 [139.71]	36"	64"	20	8"	4"			4300039	147.90 [67.09]			
4302060	339.00 [153.77]	49"	76"	24	8"	4"			4300046	181.70 [82.42]			
4302031	240.40 [109.04]	12"	40"	12	8"	4"	8"	6.81"	4300147	98.60 [44.72]	MANUAL	4300204	146.10 [66.27]
4302036	248.10 [112.54]	16"	44"	12	4"	8"			4300190	107.30 [48.67]			
4302032	263.70 [119.61]	24"	52"	16	8"	4"			4300009	123.30 [55.93]			
4302033	284.10 [128.87]	36"	64"	20	8"	4"			4300039	147.90 [67.09]			
4302034	315.30 [143.02]	49"	76"	24	8"	4"			4300046	181.70 [82.42]			
4302041	246.00 [111.58]	12"	40"	12	8"	4"	10"	7.75"	4300147	98.60 [44.72]		4300205	149.90 [67.99]
4302046	253.70 [115.08]	16"	44"	12	4"	8"			4300190	107.30 [48.67]			
4302042	278.30 [126.23]	24"	52"	16	8"	4"			4300009	123.30 [55.93]			
4302043	289.70 [131.41]	36"	64"	20	8"	4"			4300039	147.90 [67.09]			
4302044	320.90 [145.56]	49"	76"	24	8"	4"			4300046	181.70 [82.42]			
4302051	250.00 [113.40]	12"	40"	12	8"	4"	10"	8.75"	4300147	98.60 [44.72]		4300206	153.70 [69.72]
4302056	257.70 [116.89]	16"	44"	12	4"	8"			4300190	107.30 [48.67]			
4302052	262.90 [119.25]	24"	52"	16	8"	4"			4300009	123.30 [55.93]			
4302053	293.70 [133.22]	36"	64"	20	8"	4"			4300039	147.90 [67.09]			
4302054	324.90 [147.37]	49"	76"	24	8"	4"			4300046	181.70 [82.42]			
4302055	264.20 [119.84]	12"	40"	12	8"	4"	10	9.75"	4300147	98.60 [44.72]		4300173	166.70 [75.61]
4302057	271.90 [123.33]	16"	44"	12	4"	8"			4300190	107.30 [48.67]			
4302058	277.90 [126.05]	24"	52"	16	8"	4"			4300009	123.30 [55.93]			
4302059	307.90 [139.66]	36"	64"	20	8"	4"			4300039	147.90 [67.09]			
4302060	339.10 [153.81]	49"	76"	24	8"	4"			4300046	181.70 [82.42]			

4300162
Air Cylinder w/o Cab Control

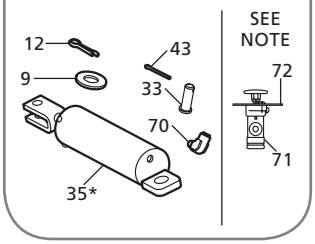

4300209
Stops, Front

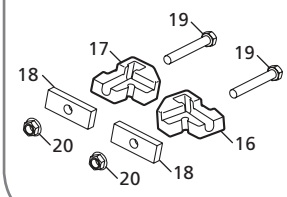

NOTE: For air operated with cab control, you will also need part number: 4300088, and 4300811.

REPAIR KIT BOM

ITEM	DESCRIPTION	PART NUMBER	QTY.	WEIGHT LBS [KG]
9	Washer, .81" I.D. x 1.47" O.D.	XB-10316	1	0.05 [0.02]
12	Pin, Cotter, .19" Diameter x 1.25" Long	9900170	1	0.01 [0.005
16	Stop, Left-Hand Front, See 4300209	4300043	1	1.64 [0.74]
17	Stop, Right-Hand Front, See 4300209	4300042	1	1.64 [0.74]
18	Plate	4300044	2	0.45 [0.20]
19	HHCS, .50"-13 x 3.75"	9900145	2	0.25 [0.11]
20	Nut, .50"-13,Flange Lock Grade 2	9900146	2	0.29 [0.13]
33	Pin, Clevis, .49" Diameter x 1.36" Long	5400219	1	0.08 [0.04]
35*	**Air Cylinder	4300145	1	2.12 [0.96]
43	Pin, Cotter, .13" Diameter x 1.25" Long	84261	1	0.01 [0.005]
70	Fitting, 90° Push Connect	XB-09031	1	0.01 [0.005]
71	Air Valve	4300811	1	0.50 [0.23]
72	Dash Plate	4300088	1	0.03 [0.01]

** - Accepts .25" O.D. Plastic Tubing

 Amendments and errors reserved. © SAF-HOLLAND, Inc.

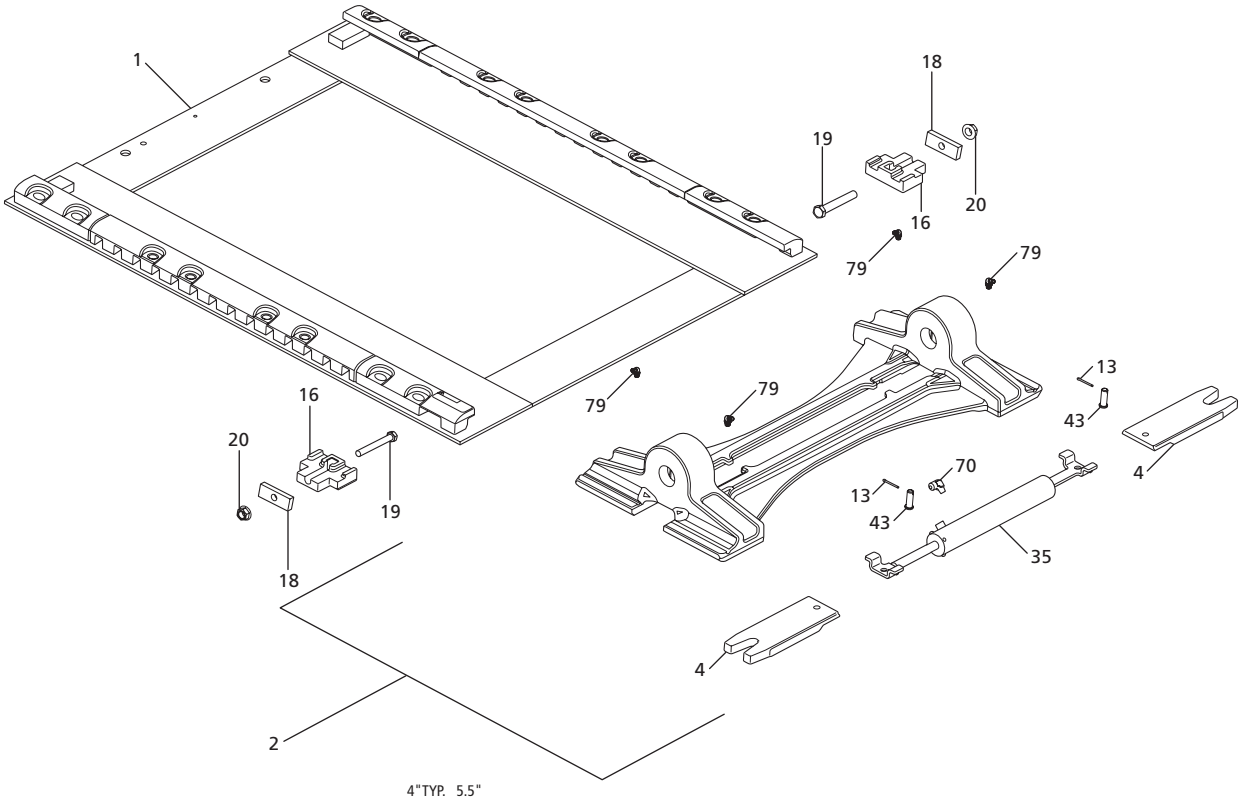

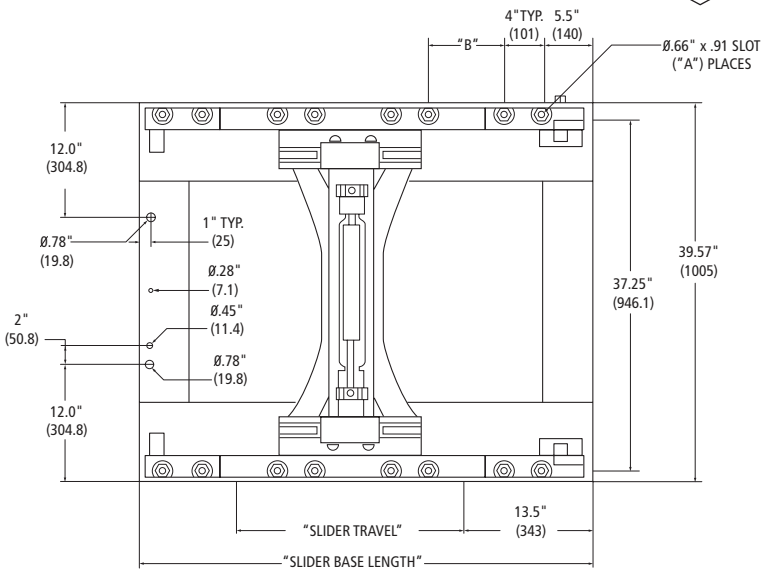

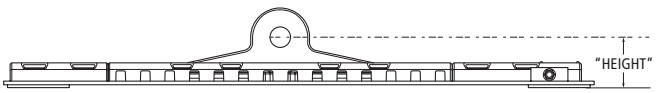

XL-FW10081PM-en-US Rev D 2016-03-01 Amendments and errors reserved. © SAF-HOLLAND, Inc.

SIMPLEX TAPERLOC XL SERIES PARTS LIST				
ITEM	DESCRIPTION	PART NUMBER	QTY.	WEIGHT LBS [KG]
4	Pin, Lock	4300214	2	3.87 [1.76]
13	Pin, Clevis .50" X 1" Long	4300274	2	0.07 [0.03]
16	Stop, Removable, See Kit 4300227	4300223	2	1.98 [0.90]
18	Plate	4300044	2	0.45 [0.20]
19	HHCS, .50"-13 X 3.75" Long	9900145	2	0.25 [0.11]
20	Nut, .50"-13,Flange Lock Grade 2	9900146	2	0.29 [0.13]
35	Air Cylinder Ass'y	4300228	1	3.80 [1.72]
43	Pin, Cotter, .13" Diameter x 1.25" Long	84261	2	0.01 [0.005]
70	Fitting, 90° Push-Connect	XB-09031	1	0.01 [0.005]
79	Fittings, Grease 65° x .38" Long	85496	4	0.01 [0.005]

SLIDE BASE AND BRACKET ASS'Y	SLIDE BASE AND BRACKET ASS'Y WEIGHT LBS [KG]	SLIDE TRAVEL	SLIDE BASE LENGTH	A # of Holes	B	HEIGHT	SLIDE BASE PART NUMBER ITEM NO. 1	SLIDE BASE WEIGHT LBS [KG]	SLIDE BRACKET PART NUMBER ITEM NO.2	SLIDE BRACKET WEIGHT LBS [KG]
4300238	190.00 [86.18]	12"	36"	12	8"	6.81"	4300280	99.00 [44.91]	4300298	85.60 [38.83]
4300239	197.00 [89.36]	16"	40"	16	4"		4300281	106.00 [48.08]		
4300240	214.00 [97.07]	24"	48"	16	8"		4300282	122.00 [55.34]		
4300241	238.00 [107.95]	36"	60"	20	8"		4300283	146.00 [66.22]		
4300242	271.00 [122.92]	48"	72"	24	8"		4300284	170.00 [77.11]		
4300243	201.00 [91.17]	12"	36"	12	8"	7.75"	4300280	99.00 [44.91]	4300299	96.80 [43.91]
4300244	208.00 [94.35]	16"	40"	16	4"		4300281	106.00 [48.08]		
4300245	225.00 [102.06]	24"	48"	16	8"		4300282	122.00 [55.34]		
4300246	249.00 [112.94]	36"	60"	20	8"		4300283	146.00 [66.22]		
4300247	283.00 [128.37]	48"	72"	24	8"		4300284	170.00 [77.11]		
4300248	217.00 [98.43]	12"	36"	12	8"	8.75"	4300280	99.00 [44.91]	4300300	113.00 [51.26]
4300249	242.00 [109.77]	16"	40"	16	4"		4300281	106.00 [48.08]		
4300250	241.00 [109.32]	24"	48"	16	8"		4300282	122.00 [55.34]		
4300251	266.00 [120.66]	36"	60"	20	8"		4300283	146.00 [66.22]		
4300252	299.00 [135.62]	48"	72"	24	8"		4300284	170.00 [77.11]		

4300227
Removable Stop

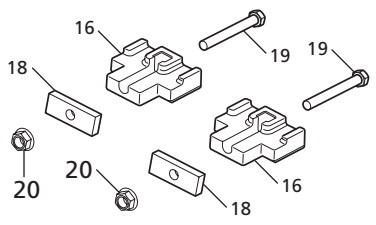

REPAIR KIT BOM				
ITEM	DESCRIPTION	PART NUMBER	QTY.	WEIGHT LBS [KG]
16	Stop, Removable	4300223	2	1.98 [0.90]
18	Plate	4300044	2	0.45 [0.20]
19	HHCS, .50"-13 X 3.75" Long	9900145	2	0.25 [0.11]
20	Nut, .50"-13,Flange Lock Grade 2	9900146	2	0.29 [0.13]

 Amendments and errors reserved. © SAF-HOLLAND, Inc.

Slide bar stops XA-2513 included in item number 1

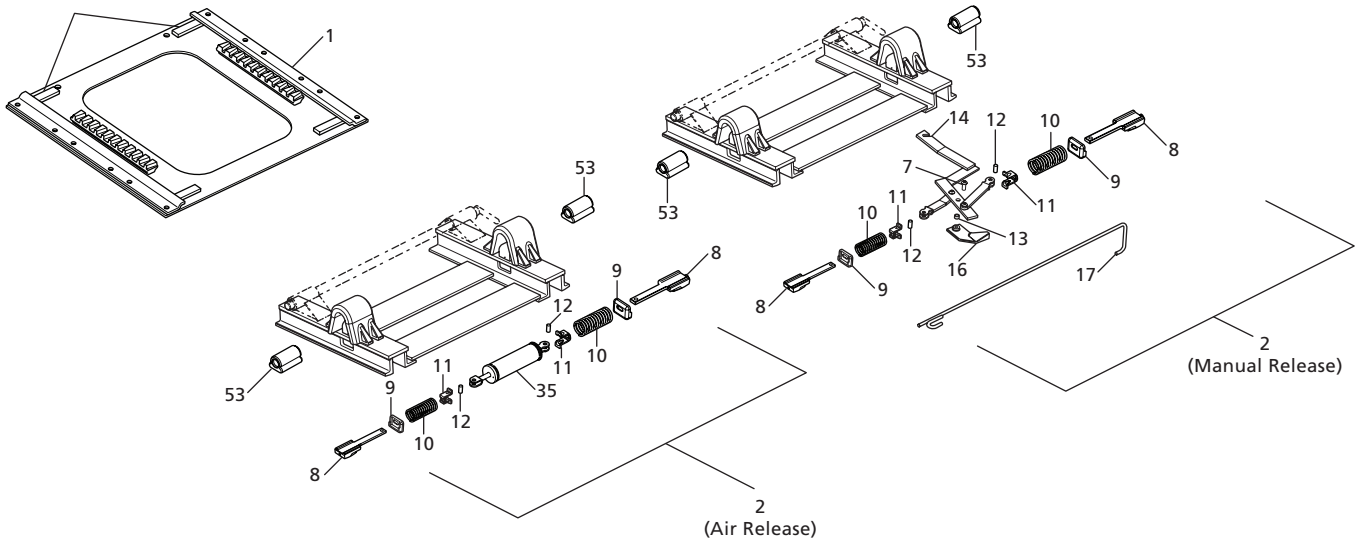

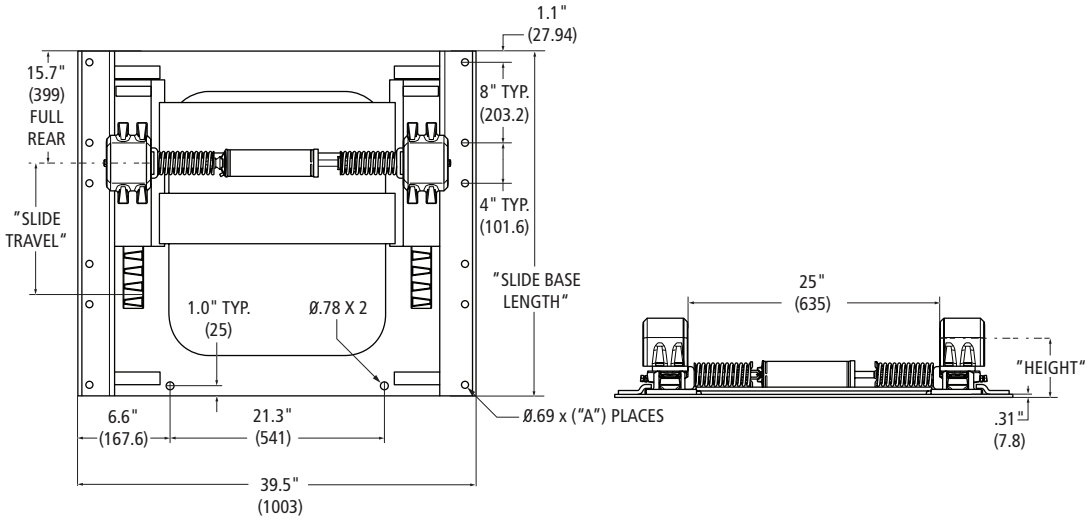

TRADITIONAL OUTBOARD NO-TILT SERIES PARTS LIST				
ITEM	DESCRIPTION	PART NUMBER	QTY.	WEIGHT LBS [KG]
7	SBHCS, .50"- 13 X 1.25" Long	XB-03730-1	1	0.10 [0.05]
8	Shoe Assembly	XA-0372-A	2	3.10 [1.41]
9	Stop, Spring	XA-01586	2	0.34 [0.15]
10	Spring	XB-2502	2	1.03 [0.47]
11	Retainer, Spring	XA-2501	2	0.24 [0.11]
12	Pin, .50" Diameter X 1.12" Long	XA-2503	2	0.06 [0.03]
13	Bushing, .50" I.D. x .68" O.D. x .44" Long	XA-03082	1	0.02 [0.01]

TRADITIONAL OUTBOARD NO-TILT SERIES PARTS LIST				
ITEM	DESCRIPTION	PART NUMBER	QTY.	WEIGHT LBS [KG]
14	Lever Assembly, Release	XA-03748	1	7.30 [3.31]
15	HHCS, .50"-20 x 1.75" Gr 5	XB-2083	2	0.13 [0.06]
16	Plate Assembly, Pivot	XA-02748-1	1	1.50 [0.68]
17	Hook Assembly, Release	XA-0756	1	1.40 [0.64]
22	Lock Nut, .50"-20 Gr C	XB-T-69-A	2	0.04 [0.02]
35	Cylinder Assembly, Air	XA-2524-R	1	5.34 [2.42]
53	Cushion, Rubber	XB-0011-2	2	0.60 [0.27]

 Amendments and errors reserved. © SAF-HOLLAND, Inc.

FW **-84** T * * **

Slide Bracket Height	T= Outboard	Slide Travel	L= Left R= Right	Options See FW Section

Example: FW35-8401T2L06



**AVAILABLE TOP PLATES	
FW35	FW8
FW31	FW83
FW33	FWS1
FW17	FW2000
FWAL	

Note: Not all are available in full assemblies

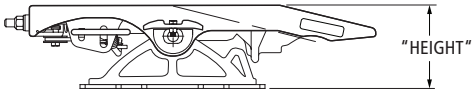

Height is measured from Face of Top Plate to Frame Rail

REF. FW PART NUMBER	REPLACED BY FW BASE PART NUMBER	REPLACEMENT SLIDE BASE AND BRACKET	REPLACEMENT SLIDE BASE AND BRACKET WEIGHT LBS [KG]	SLIDE TRAVEL	SLIDE BASE LENGTH	HEIGHT	SLIDE BASE PART NO. ITEM NO. 1	SLIDE BASE WEIGHT LBS [KG]	SLIDE BRACKET TYPE	SLIDE BRACKET PART NO. ITEM NO.2	SLIDE BRACKET WEIGHT LBS [KG]
FW**-8401T2L__	FW35N906YL00	XA-8401-T2	269.00 [122.02]	14"	42.2"	5.6"	XA-07871-2	140.00 [63.50]	AIR	XA-7401	124.00 [56.25]
FW**-8401T3L__	FW35N918YL00	XA-8401-T3	280.00 [127.01]	20"	46.2"		XA-07871-3	153.00 [69.40]			
FW**-8401T4L__	FW35N930YL00	XA-8401-T4	328.00 [148.78]	32"	58.2"		XA-07871-4	193.00 [87.54]			
FW**-8401T5L__	FW36N942YL00	XA-8401-T5	365.00 [165.56]	44"	70.2"		XA-07871-5	233.00 [105.69]			
FW**-8409T2L__	-	XA-8409-T2	274.00 [124.28]	14"	42.2"	7.1"	XA-07871-2	140.00 [63.50]		XA-7409	154.00 [69.85]
FW**-8409T3L__	-	XA-8409-T3	305.00 [138.35]	20"	46.2"		XA-07871-3	153.00 [69.40]			
FW**-8409T4L__	-	XA-8409-T4	338.00 [153.31]	32"	58.2"		XA-07871-4	193.00 [87.54]			
FW**-8409T5L__	-	XA-8409-T5	378.00 [171.46]	44"	70.2"		XA-07871-5	233.00 [105.69]			
FW**-8411T2L__	-	XA-8411-T2	282.00 [127.91]	14"	42.2"	5.6"	XA-07871-2	140.00 [63.50]	MANUAL	XA-7411	124.00 [56.25]
FW**-8411T3L__	-	XA-8411-T3	302.00 [136.98]	20"	46.2"		XA-07871-3	153.00 [69.40]			
FW**-8411T4L__	-	XA-8411-T4	338.00 [153.31]	32"	58.2"		XA-07871-4	193.00 [87.54]			
FW**-8411T5L__	-	XA-8411-T5	375.00 [170.10]	44"	70.2"		XA-07871-5	233.00 [105.69]			
FW**-8419T2L__	-	XA-8419-T2	281.00 [127.46]	14"	42.2"	7.1"	XA-07871-2	140.00 [63.50]		XA-7419	153.00 [69.40]
FW**-8419T3L__	-	XA-8419-T3	312.00 [141.52]	20"	46.2"		XA-07871-3	153.00 [69.40]			
FW**-8419T4L__	-	XA-8419-T4	345.00 [156.49]	32"	58.2"		XA-07871-4	193.00 [87.54]			
FW**-8419T5L__	-	XA-8419-T5	386.00 [175.09]	44"	70.2"		XA-07871-5	233.00 [105.69]			

** Fifth wheel model number.
__ See option code per fifthwheel assembly.

NOTE: No-tilt components not available with bracket. See no-tilt in accessories section for components and kits.

 Amendments and errors reserved. © SAF-HOLLAND, Inc.

Slide bar stops XA-2513 included in item number 1

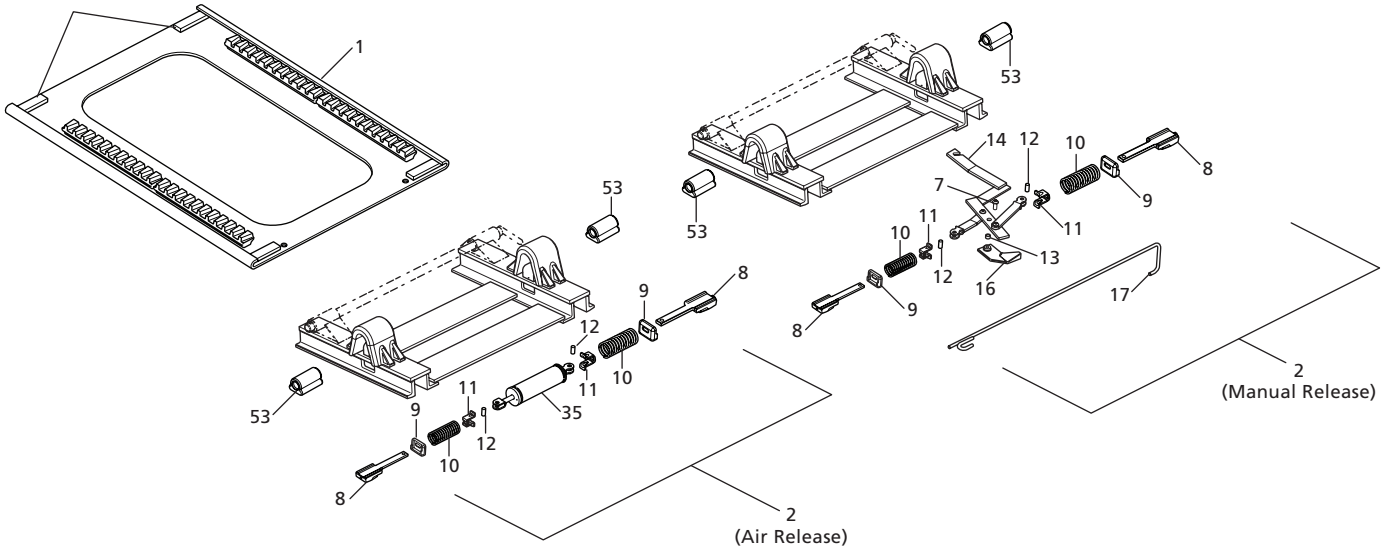

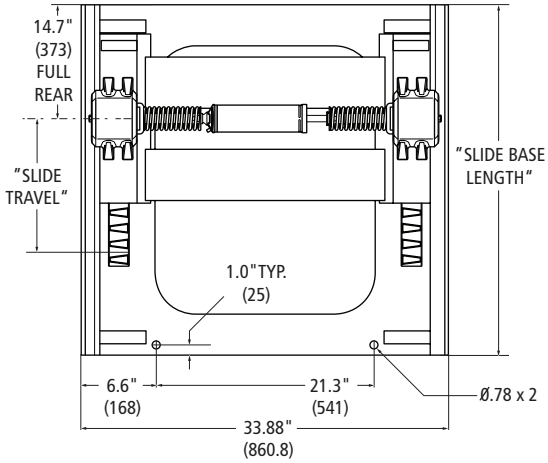

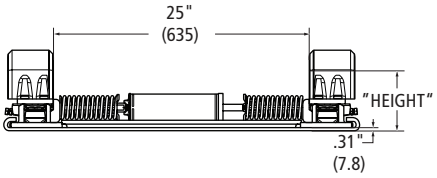

TRADITIONAL OUTBOARD NO-TILT SERIES PARTS LIST				
ITEM	DESCRIPTION	PART NUMBER	QTY.	WEIGHT LBS [KG]
7	SBHCS, .50"- 13 X 1.25" Long	XB-03730-1	1	0.10 [0.05]
8	Shoe Assembly	XA-0372-A	2	3.10 [1.41]
9	Stop, Spring	XA-01586	2	0.34 [0.15]
10	Spring	XB-2502	2	1.03 [0.47]
11	Retainer, Spring	XA-2501	2	0.24 [0.11]
12	Pin, .50" Diameter X 1.12" Long	XA-2503	2	0.06 [0.03]
13	Bushing, .50" I.D. x .68" O.D. x .44" Long	XA-03082	1	0.02 [0.01]

TRADITIONAL OUTBOARD NO-TILT SERIES PARTS LIST				
ITEM	DESCRIPTION	PART NUMBER	QTY.	WEIGHT LBS [KG]
14	Lever Assembly, Release	XA-03748	1	7.30 [3.31]
15	HHCS, .50"-20 x 1.75" Gr 5	XB-2083	2	0.13 [0.06]
16	Plate Assembly, Pivot	XA-02748-1	1	1.50 [0.68]
17	Hook Assembly, Release	XA-0756	1	1.40 [0.64]
22	Lock Nut, .50"-20 Gr C	XB-T-69-A	2	0.04 [0.02]
35	Cylinder Assembly, Air	XA-2524-R	1	5.34 [2.42]
53	Cushion, Rubber	XB-0011-2	2	0.60 [0.27]

 Amendments and errors reserved. © SAF-HOLLAND, Inc.

FW **-74** X * * **

Slide Bracket Height	X= Inboard No Angle	Slide Travel	L= Left R= Right	Options See FW Section

Example: FW35-7401X2L06

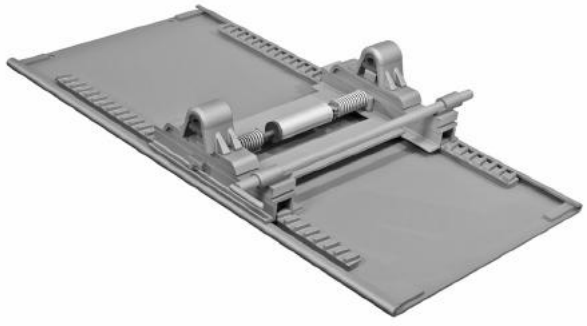

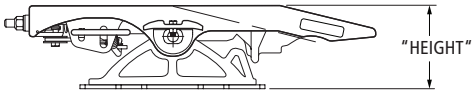

Height is measured from Face of Top Plate to Frame Rail

**AVAILABLE TOP PLATES	
FW35	FW8
FW31	FW83
FW33	FWS1
FW17	FW2000
FWAL	

Note: Not all are available in full assemblies

REF. FW PART NO.	REPLACED BY FW BASE PART NUMBER	REPLACEMENT SLIDE BASE AND BRACKET	REPLACEMENT SLIDE BASE AND BRACKET WEIGHT	SLIDE TRAVEL	SLIDE BASE LENGTH	HEIGHT	SLIDE BASE PART NO. ITEM NO. 1	SLIDE BASE WEIGHT LBS [KG]	SLIDE BRACKET TYPE	SLIDE BRACKET PART NO. ITEM NO.2	SLIDE BRACKET WEIGHT LBS [KG]
FW**-7401X2L__	FW**N906WL00	XA-7401-X2	277.00 [125.65]	14"	38.9"	5.6"	XA-0750-2	155.00 [70.31]	AIR	XA-7401	124.00 [56.25]
FW**-7401X3L__	FW**N918WL00	XA-7401-X3	307.00 [139.25]	20"	45.0"		XA-0750-3	180.00 [81.65]			
FW**-7401X4L__	FW**N930WL00	XA-7401-X4	362.00 [164.20]	32"	57.2"		XA-0750-4	233.00 [105.69]			
FW**-7401X5L__	FW**N942WL00	XA-7401-X5	417.00 [189.15]	44"	69.5"		XA-0750-5	286.00 [129.73]			
FW**-7401X6L__	-	XA-7401-X6	437.00 [198.22]	57"	82.0"		XA-0750-6	344.00 [156.04]			
FW**-7409X2L__	-	XA-7409-X2	310.00 [140.61]	14"	38.9"	7.1"	XA-0750-2	155.00 [70.31]		XA-7409	154.00 [69.85]
FW**-7409X3L__	-	XA-7409-X3	332.00 [150.59]	20"	45.0"		XA-0750-3	180.00 [81.65]			
FW**-7409X4L__	-	XA-7409-X4	384.00 [174.18]	32"	57.2"		XA-0750-4	233.00 [105.69]			
FW**-7409X5L__	-	XA-7409-X5	439.00 [199.13]	44"	69.5"		XA-0750-5	286.00 [129.73]			
FW**-7409X6L__	-	XA-7409-X6	489.00 [221.81]	57"	82.0"		XA-0750-6	344.00 [156.04]			
FW**-7411X2L__	-	XA-7411-X2	282.00 [127.91]	14"	38.9"	5.6"	XA-0750-2	155.00 [70.31]	MAN-UAL	XA-7411	124.00 [56.25]
FW**-7411X3L__	-	XA-7411-X3	317.00 [143.79]	20"	45.0"		XA-0750-3	180.00 [81.65]			
FW**-7411X4L__	-	XA-7411-X4	372.00 [168.74]	32"	57.2"		XA-0750-4	233.00 [105.69]			
FW**-7411X5L__	-	XA-7411-X5	427.00 [193.68]	44"	69.5"		XA-0750-5	286.00 [129.73]			
FW**-7411X6L__	-	XA-7411-X6	517.00 [234.51]	57"	82.0"		XA-0750-6	344.00 [156.04]			
FW**-7419X2L__	-	XA-7419-X2	317.00 [143.79]	14"	38.9"	7.1"	XA-0750-2	155.00 [70.31]		XA-7419	153.00 [69.40]
FW**-7419X3L__	-	XA-7419-X3	339.00 [153.77]	20"	45.0"		XA-0750-3	180.00 [81.65]			
FW**-7419X4L__	-	XA-7419-X4	391.00 [177.35]	32"	57.2"		XA-0750-4	233.00 [105.69]			
FW**-7419X5L__	-	XA-7419-X5	446.00 [202.30]	44"	69.5"		XA-0750-5	286.00 [129.73]			
FW**-7419X6L__	-	XA-7419-X6	496.00 [224.98]	57"	82.0"		XA-0750-6	344.00 [156.04]			

** Fifth wheel model number.
__ See option code per fifthwheel assembly.

NOTE: No-tilt components not available with bracket. See no-tilt in accessories section for components and kits.

 Amendments and errors reserved. © SAF-HOLLAND, Inc.

Slide bar stops XA-2513 included in item number 1

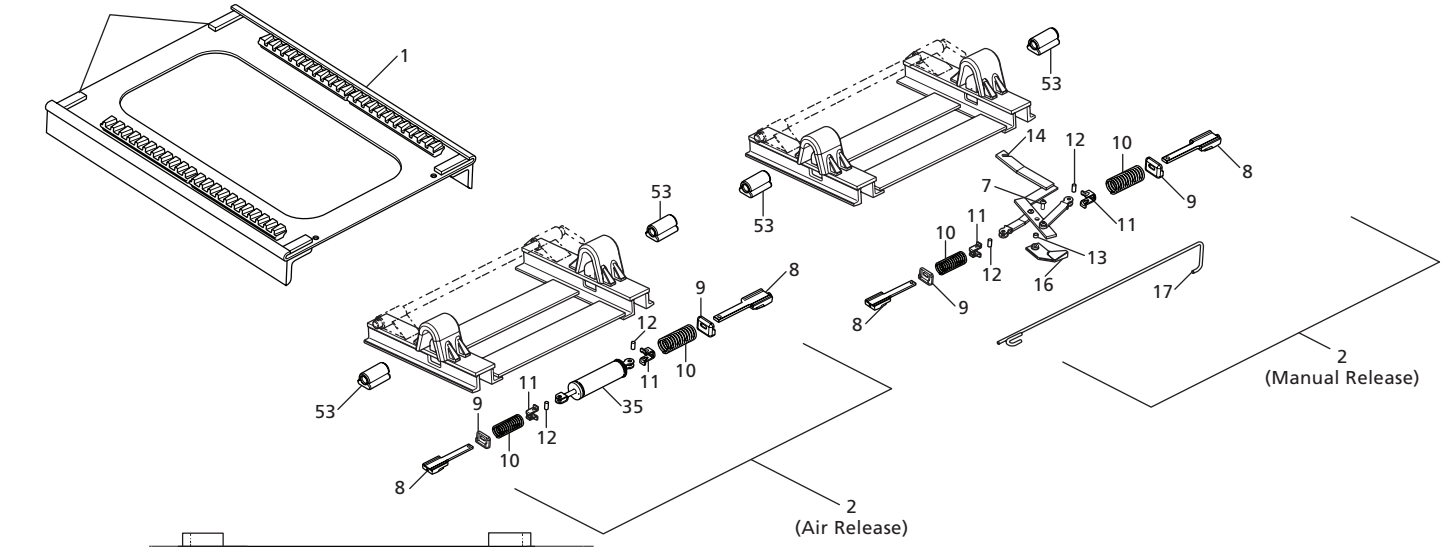

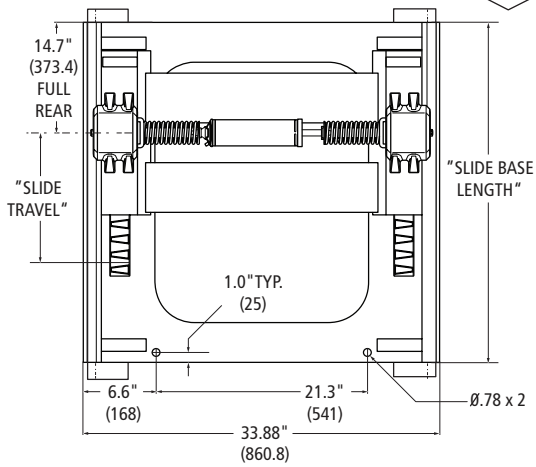

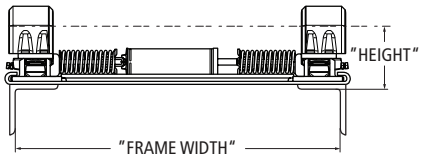

TRADITIONAL INBOARD NO-TILT SERIES PARTS LIST				
ITEM	DESCRIPTION	PART NUMBER	QTY.	WEIGHT LBS [KG]
7	SBHCS, .50"- 13 X 1.25" Long	XB-03730-1	1	0.10 [0.05]
8	Shoe Assembly	XA-0372-A	2	3.10 [1.41]
9	Stop, Spring	XA-01586	2	0.34 [0.15]
10	Spring	XB-2502	2	1.03 [0.47]
11	Retainer, Spring	XA-2501	2	0.24 [0.11]
12	Pin, .50" Diameter X 1.12" Long	XA-2503	2	0.06 [0.03]
13	Bushing, .50" I.D. x .68" O.D. x .44" Long	XA-03082	1	0.02 [0.01]
14	Lever Assembly, Release	XA-03748	1	7.30 [3.31]
15	HHCS, .50"-20 x 1.75" Gr 5	XB-2083	2	0.13 [0.06]
16	Plate Assembly, Pivot	XA-02748-1	1	1.50 [0.68]
17	Hook Assembly, Release	XA-0756	1	1.40 [0.64]
22	Lock Nut, .50"-20 Gr C	XB-T-69-A	2	0.04 [0.02]
35	Cylinder Assembly, Air	XA-2524-R	1	5.34 [2.42]
53	Cushion, Rubber	XB-0011-2	2	0.60 [0.27]

XL-FW10081PM-en-US Rev D 2016-03-01 Amendments and errors reserved. © SAF-HOLLAND, Inc.

FW **-74** * * * **

Slide Bracket Height	Frame Width (See Chart)	Slide Travel	L= Left R= Right	Options (See Chart)

Example: FW35-7401G2L06



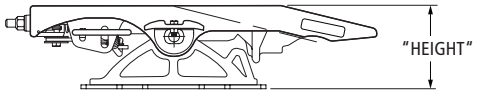

Height is measured from Face of Top Plate to Frame Rail

**AVAILABLE TOP PLATES	
FW35	FW8
FW31	FW83
FW33	FWS1
FW17	FW2000
FWAL	

Note: Not all are available in full assemblies

REF. FW PART NO.	REPLACEMENT SLIDE BASE AND BRACKET	REPLACEMENT SLIDE BASE AND BRACKET WEIGHT	SLIDE TRAVEL	SLIDE BASE LENGTH	HEIGHT	SLIDE BASE PART NO. ITEM NO. 1	SLIDE BASE WEIGHT	SLIDE BRACKET TYPE	SLIDE BRACKET PART NO. ITEM NO.2	SLIDE BRACKET WEIGHT LBS [KG]
FW**-7401G2L__	XA-7401-G2__	342.00 [155.13]	14"	38.9"	5.9"	XA-0752-G2	234.00 [106.14]	AIR	XA-7401	124.00 [56.25]
FW**-7401G3L__	XA-7401-G3__	434.00 [196.86]	20"	45.0"		XA-0752-G3	256.00 [116.12]			
FW**-7401G4L__	XA-7401-G4__	441.00 [200.03]	32"	57.2"		XA-0752-G4	328.00 [148.78]			
FW**-7401G5L__	XA-7401-G5__	517.00 [234.51]	44"	69.5"		XA-0752-G5	312.00 [141.52]			
FW**-7401G6L__	XA-7401-G6__	547.00 [248.12]	57"	82.0"		XA-0752-G6	509.00 [230.88]			
FW**-7401G7L__	XA-7401-G7__	587.00 [266.26]	69"	94.0"		XA-0752-G7	558.00 [253.10]			
FW**-7409G2L__	XA-7409-G2__	389.00 [176.45]	14"	38.9"	7.05"	XA-0752-G2	234.00 [106.14]		XA-7409	154.00 [69.85]
FW**-7409G3L__	XA-7409-G3__	410.00 [185.97]	20"	45.0"		XA-0752-G3	256.00 [116.12]			
FW**-7409G4L__	XA-7409-G4__	482.00 [218.63]	32"	57.2"		XA-0752-G4	328.00 [148.78]			
FW**-7409G5L__	XA-7409-G5__	557.00 [252.65]	44"	69.5"		XA-0752-G5	312.00 [141.52]			
FW**-7409G6L__	XA-7409-G6__	628.00 [284.86]	57"	82.0"		XA-0752-G6	509.00 [230.88]			
FW**-7409G7L__	XA-7409-G7__	656.00 [297.56]	69"	94.0"		XA-0752-G7	558.00 [253.10]			
FW**-7411G2L__	XA-7411-G2__	347.00 [157.40]	14"	38.9"	5.55"	XA-0752-G2	234.00 [106.14]	MANUAL	XA-7411	124.00 [56.25]
FW**-7411G3L__	XA-7411-G3__	377.00 [171.00]	20"	45.0"		XA-0752-G3	256.00 [116.12]			
FW**-7411G4L__	XA-7411-G4__	447.00 [202.76]	32"	57.2"		XA-0752-G4	328.00 [148.78]			
FW**-7411G5L__	XA-7411-G5__	522.00 [236.78]	44"	69.5"		XA-0752-G5	312.00 [141.52]			
FW**-7411G6L__	XA-7411-G6__	546.00 [247.66]	57"	82.0"		XA-0752-G6	509.00 [230.88]			
FW**-7411G7L__	XA-7411-G7__	566.00 [256.73]	69"	94.0"		XA-0752-G7	558.00 [253.10]			
FW**-7419G2L__	XA-7419-G2__	395.00 [179.17]	14"	38.9"	7.05"	XA-0752-G2	234.00 [106.14]		XA-7419	153.00 [69.40]
FW**-7419G3L__	XA-7419-G3__	417.00 [189.15]	20"	45.0"		XA-0752-G3	256.00 [116.12]			
FW**-7419G4L__	XA-7419-G4__	489.00 [221.81]	32"	57.2"		XA-0752-G4	328.00 [148.78]			
FW**-7419G5L__	XA-7419-G5__	564.00 [255.83]	44"	69.5"		XA-0752-G5	312.00 [141.52]			
FW**-7419G6L__	XA-7419-G6__	635.00 [288.03]	57"	82.0"		XA-0752-G6	509.00 [230.88]			
FW**-7419G7L__	XA-7419-G7__	658.00 [298.46]	69"	94.0"		XA-0752-G7	558.00 [253.10]			

** Fifth wheel model number.
__ See option code per fifthwheel assembly.

NOTE: No-tilt components not available with bracket. See no-tilt in accessories section for components and kits.

 Amendments and errors reserved. © SAF-HOLLAND, Inc.

FRAME WIDTH CODE CHART		
FRAME CODE	FRAME WIDTH	ANGLE SIZE
A	33.25"	.38" X 4" X 4"
B	33.38"	.38" X 4" X 4"
C	33.5"	.38" X 4" X 4"
D	33.62"	.38" X 4" X 4"
E	33.75"	.38" X 4" X 4"
F	33.88"	.38" X 4" X 4"
G†	34.00"	.38" X 4" X 4"
H	34.12"	.38" X 4" X 4"
J	34.25"	.38" X 4" X 4"
L	34.50"	.38" X 4" X 4"
M	34.62"	.38" X 5" X 5"
N	34.75"	.38" X 5" X 5"
P	34.88"	.38" X 5" X 5"

† Standard frame width code
Frame code letter "X" indicates that the slider is not supplied with mounting angles. See option codes for other options such as angle size.

OPTION CODE CHART	
OPTION CODE (__)	MOUNTING ANGLE SIZE
Blank/00	See Frame Width Chart
21	.38" X 5" X 5"
51	.38" X 4" X 6"
57	.31" X 3.5" X 4"
65	.31" X 4" X 4"
70	.50" x 5" x 5" Angle

XL-FW10081PM-en-US Rev D 2016-03-01 Amendments and errors reserved. © SAF-HOLLAND, Inc.

THIS PAGE INTENTIONALLY LEFT BLANK

 Amendments and errors reserved. © SAF-HOLLAND, Inc.

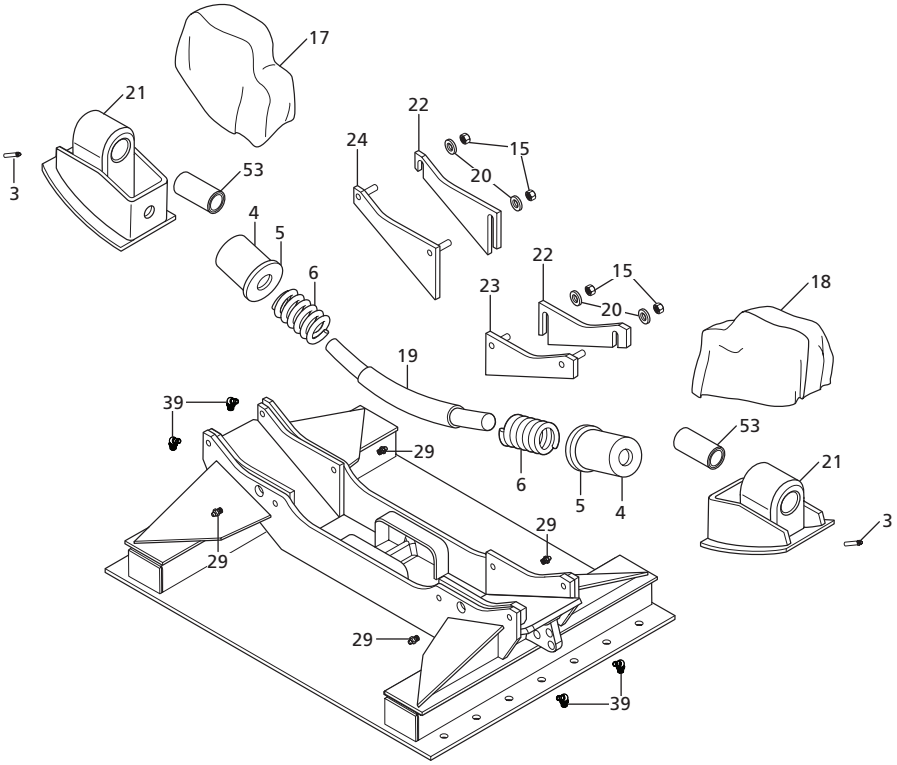

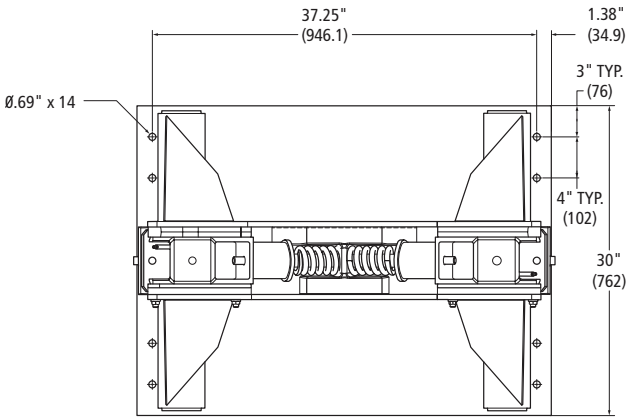

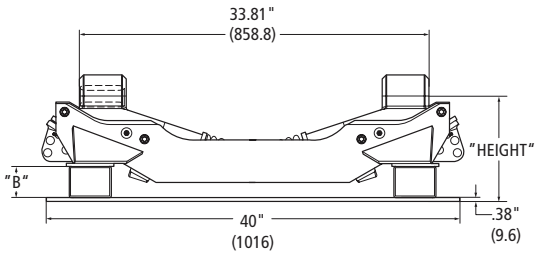

 Amendments and errors reserved. © SAF-HOLLAND, Inc.

KOMPENSATOR SERIES PARTS LIST				
ITEM	DESCRIPTION	PART NUMBER	QTY.	WEIGHT LBS [KG]
3	Fitting, Grease	XB-H-38-F	2	0.02 [0.01]
4	Cushion	XB-0009	2	1.41 [0.64]
5	Washer, 1.31" I.D. x 4" O.D.	XA-1284-2	2	1.19 [0.54]
6	Spring	XB-01923	2	2.51 [1.14]
15	Nut, Jam, .50"-13	XB-C-59	4	0.03 [0.01]
17	Cover, Dust, Left-Hand	XA-0128-L	1	0.70 [0.32]
18	Cover, Dust, Right-Hand	XA-0128-R	1	0.70 [0.32]
19	Bar, Tie	XA-39	1	7.95 [3.61]

KOMPENSATOR SERIES PARTS LIST				
ITEM	DESCRIPTION	PART NUMBER	QTY.	WEIGHT LBS [KG]
21	Shoe Assembly (Includes item #3)	XA-0024	2	30.30 [13.74]
22	Shim	XA-0014	2	0.08 [0.04]
23	Plate , Bearing, Right-Hand	XA-01997	1	1.25 [0.57]
24	Plate , Bearing, Left-Hand	XA-01998	1	2.75 [1.25]
29	Fittings, Grease	XB-H-38	4	0.01 [0.00]
39	Fittings, Grease 90°	XB-H-38-A	4	0.03 [0.01]
53	Cushion, Rubber	XB-0011	2	0.37 [0.17]

FW **-772* X, * **

Komensator Outboard Plate Mount Height	L= Left R= Right	Options (See Chart)

Example: FW35-7726XL00



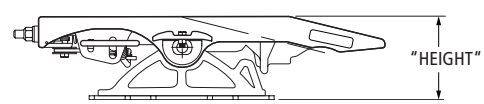

Height is measured from Face of Top Plate to Frame Rail

**AVAILABLE TOP PLATES	
FW35	FW8
FW31	FW83
FW33	FWS1
FW17	FW2000
FWAL	

REF. FW PART NUMBER	BRACKET PART NUMBER	HEIGHT	B	BRACKET WEIGHT LBS [KG]
FW**-7726XL__	XA-40-7726	10"	3"	400.00 [181.44]
FW**-7727XL__	XA-40-7727	9"	2"	411.00 [186.43]
FW**-7729XL__	XA-40-7729	7"	--- †	352.00 [159.66]

RK-01370
Lock Out

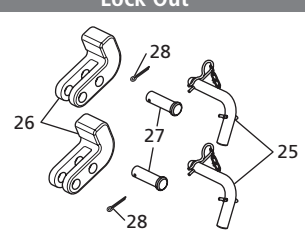

RK-01370 LOCK OUT PARTS LIST				
ITEM	DESCRIPTION	PART NUMBER	QTY.	WEIGHT LBS [KG]
25	Pin, "L" Assembly	XA-01429	2	0.92 [0.42]
26	Lockout Stop	XA-01427	2	3.67 [1.66]
27	Pin, Shackle, .75 Diameter x 2.50" Long	XB-847	2	0.36 [0.16]
28	Pin, Cotter, .19" Diameter x 1.25" Long	XB-382	2	0.01 [0.00]

† Kompensator frame is mounted directly to plate and extends 1.17" below bottom of plate.
** Fifth wheel model number.
__ See option code per fifthwheel assembly.

 Amendments and errors reserved. © SAF-HOLLAND, Inc.

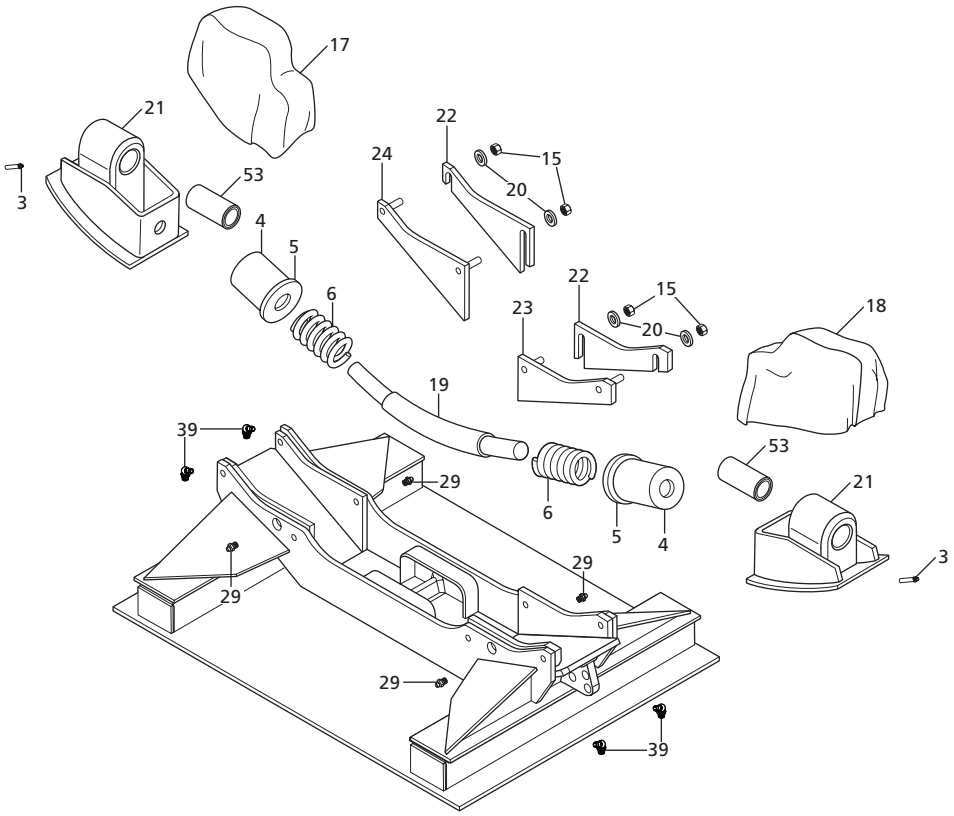

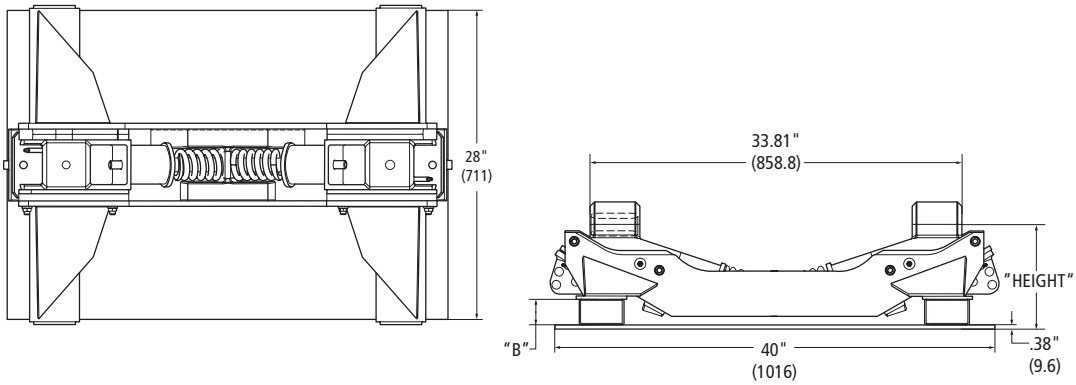

 Amendments and errors reserved. © SAF-HOLLAND, Inc.

KOMPENSATOR SERIES PARTS LIST				
ITEM	DESCRIPTION	PART NUMBER	QTY.	WEIGHT LBS [KG]
3	Fitting, Grease	XB-H-38-F	2	0.02 [0.01]
4	Cushion	XB-0009	2	1.41 [0.64]
5	Washer, 1.31" I.D. x 4" O.D.	XA-1284-2	2	1.19 [0.54]
6	Spring	XB-01923	2	2.51 [1.14]
15	Nut, Jam, .50"-13	XB-C-59	4	0.03 [0.01]
17	Cover, Dust, Left-Hand	XA-0128-L	1	0.70 [0.32]
18	Cover, Dust, Right-Hand	XA-0128-R	1	0.70 [0.32]
19	Bar, Tie	XA-39	1	7.95 [3.61]

KOMPENSATOR SERIES PARTS LIST				
ITEM	DESCRIPTION	PART NUMBER	QTY.	WEIGHT LBS [KG]
20	Washer, Lock, .50" I.D. x .88" O.D.	XB-T-45-1	4	0.02 [0.01]
21	Shoe Assembly (Includes item #3)	XA-0024	2	30.30 [13.74]
22	Shim	XA-0014	2	0.08 [0.04]
23	Plate , Bearing, Right-Hand	XA-01997	1	1.25 [0.57]
24	Plate , Bearing, Left-Hand	XA-01998	1	2.75 [1.25]
29	Fittings, Grease	XB-H-38	4	0.01 [0.00]
39	Fittings, Grease 90°	XB-H-38-A	4	0.03 [0.01]
53	Cushion, Rubber	XB-0011	2	0.37 [0.17]

FW **-772* X * **

Komensator Inboard Plate Mount Height	L= Left R= Right	Options (See Chart)

Example: FW35-7721XL00



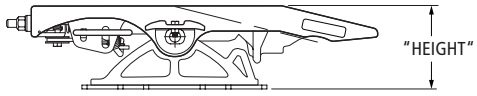

Height is measured from Face of Top Plate to Frame Rail

**AVAILABLE TOP PLATES	
FW35	FW8
FW31	FW83
FW33	FWS1
FW17	FW2000
FWAL	

REF. FW PART NO.	BRACKET PART NO.	HEIGHT	B	BRACKET WEIGHT LBS [KG]
FW**-7721XL__	XA-40-7721	10"	3"	414.00 [187.79]
FW**-7722XL__	XA-40-7722	9"	2"	403.00 [182.80]
FW**-7723XL__	XA-40-7723	7"	--- †	338.00 [153.31]

† Kompensator frame is mounted directly to plate and extends 1.17" below bottom of plate.
** Fifth wheel model number.
__ See option code per fifthwheel assembly.

RK-01370
Lock Out

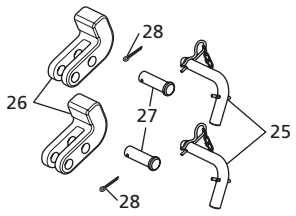

RK-01370 LOCK OUT PARTS LIST				
ITEM	DESCRIPTION	PART NUMBER	QTY.	WEIGHT LBS [KG]
25	Pin, "L" Assembly	XA-01429	2	0.92 [0.42]
26	Lockout Stop	XA-01427	2	3.67 [1.66]
27	Pin, Shackle, .75 Diameter x 2.50" Long	XB-847	2	0.36 [0.16]
28	Pin, Cotter, .19" Diameter x 1.25" Long	XB-382	2	0.01 [0.005]

 Amendments and errors reserved. © SAF-HOLLAND, Inc.

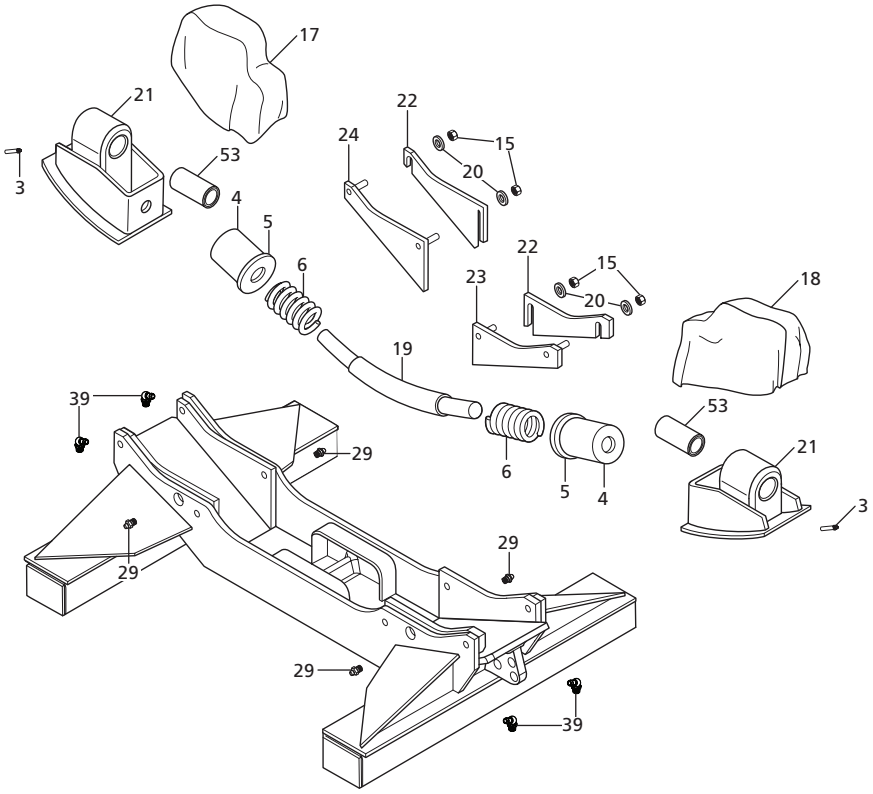

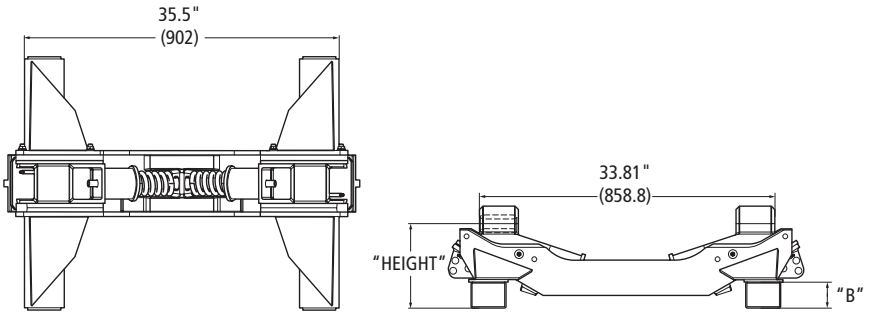

 Amendments and errors reserved. © SAF-HOLLAND, Inc.

KOMPENSATOR SERIES PARTS LIST				
ITEM	DESCRIPTION	PART NUMBER	QTY.	WEIGHT LBS [KG]
3	Fitting, Grease	XB-H-38-F	2	0.02 [0.01]
4	Cushion	XB-0009	2	1.41 [0.64]
5	Washer, 1.31" I.D. x 4" O.D.	XA-1284-2	2	1.19 [0.54]
6	Spring	XB-01923	2	2.51 [1.14]
15	Nut, Jam, .50"-13	XB-C-59	4	0.03 [0.01]
17	Cover, Dust, Left-Hand	XA-0128-L	1	0.70 [0.32]
18	Cover, Dust, Right-Hand	XA-0128-R	1	0.70 [0.32]
19	Bar, Tie	XA-39	1	7.95 [3.61]

KOMPENSATOR SERIES PARTS LIST				
ITEM	DESCRIPTION	PART NUMBER	QTY.	WEIGHT LBS [KG]
20	Washer, Lock, .50" I.D. x .88" O.D.	XB-T-45-1	4	0.02 [0.01]
21	Shoe Assembly (Includes item #3)	XA-0024	2	30.30 [13.74]
22	Shim	XA-0014	2	0.08 [0.04]
23	Plate , Bearing, Right-Hand	XA-01997	1	1.25 [0.57]
24	Plate , Bearing, Left-Hand	XA-01998	1	2.75 [1.25]
29	Fittings, Grease	XB-H-38	4	0.01 [0.005]
39	Fittings, Grease 90°	XB-H-38-A	4	0.03 [0.01]
53	Cushion, Rubber	XB-0011	2	0.37 [0.17]

FW **-770* **X** * **

Komensator Inboard for Angle Height	L= Left R= Right	Options (See Chart)

Example: FW35-7701XL00

**AVAILABLE TOP PLATES	
FW35	FW8
FW31	FW83
FW33	FWS1
FW17	FW2000
FWAL	



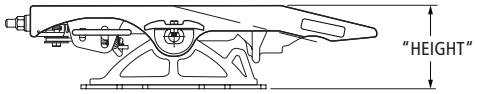

Height is measured from Face of Top Plate to Frame Rail

REF. FW PART NUMBER	BRACKET PART NUMBER	HEIGHT	B	BRACKET WEIGHT LBS [KG]
FW**-7701XL__	XA-40-7701	9"	3"	295.00 [133.81]
FW**-7702XL__	XA-40-7702	8"	2"	284.00 [128.82]
FW**-7703XL__	XA-40-7703	6"	--- †	240.00 [108.86]

† Kompensator frame is mounted directly to plate and extends 1.54" below bottom of plate.
** Fifth wheel model number.
__ See option code per fifthwheel assembly.

RK-01370 Lock Out

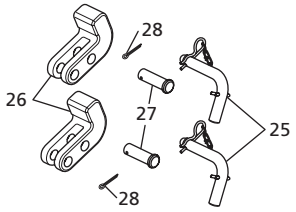

RK-01370 LOCK OUT PARTS LIST				
ITEM	DESCRIPTION	PART NO.	QTY.	WEIGHT LBS [KG]
25	Pin, "L" Assembly	XA-01429	2	0.92 [0.42]
26	Lockout Stop	XA-01427	2	3.67 [1.66]
27	Pin, Shackle, .75 Diameter x 2.50" Long	XB-847	2	0.36 [0.16]
28	Pin, Cotter, .19" Diameter x 1.25" Long	XB-382	2	0.01 [0.005]

 Amendments and errors reserved. © SAF-HOLLAND, Inc.

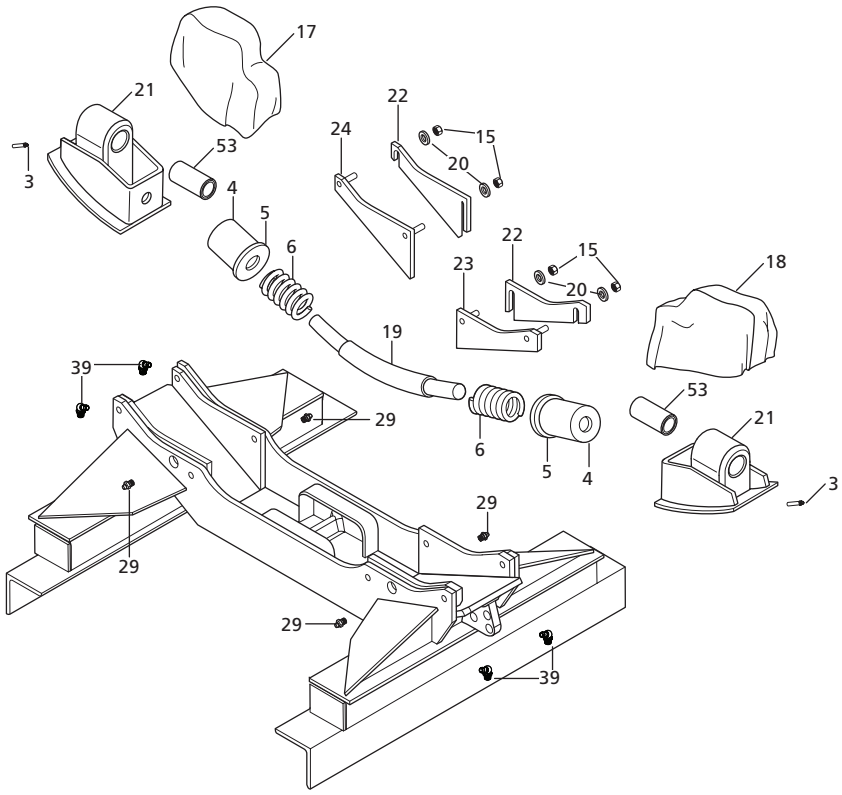

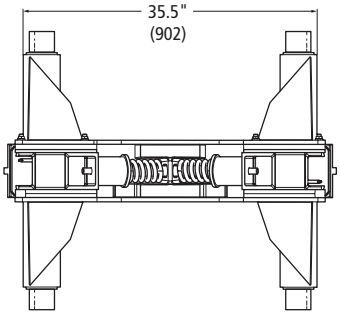

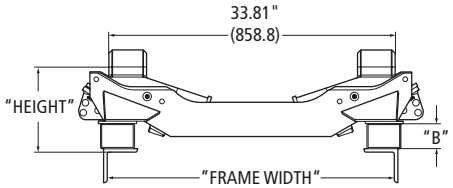

See option codes for angle size.

KOMPENSATOR SERIES PARTS LIST				
ITEM	DESCRIPTION	PART NUMBER	QTY.	WEIGHT LBS [KG]
3	Fitting, Grease	XB-H-38-F	2	0.02 [0.01]
4	Cushion	XB-0009	2	1.41 [0.64]
5	Washer, 1.31" I.D. x 4" O.D.	XA-1284-2	2	1.19 [0.54]
6	Spring	XB-01923	2	2.51 [1.14]
15	Nut, Jam, .50"-13	XB-C-59	4	0.03 [0.01]
17	Cover, Dust, Left-Hand	XA-0128-L	1	0.70 [0.32]
18	Cover, Dust, Right-Hand	XA-0128-R	1	0.70 [0.32]
19	Bar, Tie	XA-39	1	7.95 [3.61]

KOMPENSATOR SERIES PARTS LIST				
ITEM	DESCRIPTION	PART NUMBER	QTY.	WEIGHT LBS [KG]
20	Washer, Lock, .50" I.D. x .88" O.D.	XB-T-45-1	4	0.02 [0.01]
21	Shoe Assembly (Includes item #3)	XA-0024	2	30.30 [13.74]
22	Shim	XA-0014	2	0.08 [0.04]
23	Plate , Bearing, Right-Hand	XA-01997	1	1.25 [0.57]
24	Plate , Bearing, Left-Hand	XA-01998	1	2.75 [1.25]
29	Fittings, Grease	XB-H-38	4	0.01 [0.00]
39	Fittings, Grease 90°	XB-H-38-A	4	0.03 [0.01]
53	Cushion, Rubber	XB-0011	2	0.37 [0.17]

 Amendments and errors reserved. © SAF-HOLLAND, Inc.

FW **-772* G * **

Komensator Inboard with Angle Height	Frame Width	L= Left R= Right	Options (See Chart)

Example: FW35-7711GL00



**AVAILABLE TOP PLATES	
FW35	FW8
FW31	FW83
FW33	FWS1
FW17	FW2000
FWAL	

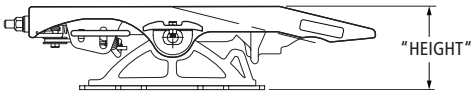

Height is measured from Face of Top Plate to Frame Rail

REF. FW PART NUMBER	BRACKET PART NO.	HEIGHT	B	BRACKET WEIGHT LBS [KG]
FW**-7711GL__	XA-40-7711-G	10.0"	3.0"	375.00 [170.10]
FW**-7712GL__	XA-40-7712-G	9.0"	2.0"	360.00 [163.29]
FW**-7713GL__	XA-40-7713-G	7.0"	--- †	316.00 [143.34]

FRAME WIDTH CODE CHART			
FRAME WIDTH CODE LETTER	FRAME WIDTH	FRAME WIDTH CODE LETTER	FRAME WIDTH
A	33.25"	G†	34.00"
B	33.38"	H	34.12"
C	33.50"	J	34.25"
D	33.62"	K	34.38"
E	33.75"	L	34.50"
F	33.88"	M	34.62"
N	34.75"		

† Kompensator fram bracket extends 1.54" below mounting pads.
** Fifth wheel model number.
__ See option code per fifthwheel assembly.

OPTION CODE CHART	
OPTION CODE (**)	MOUNTING ANGLE SIZE
Blank	Standard with .38" x 4" x 4" Angle
19	Komp Lockouts with .38" x 4" x 4" Angle
21	.38" x 5" x 5" Angle
51	.38" x 4" x 6" Angle
53	.38" x 4" x 4" Angle, Centered
70	.50" x 5" x 5" Angle

† Standard
Frame code letter "X" indicates that the slider is not supplied with mounting angles. See option codes for other options such as angle size.

RK-01370
Lock Out

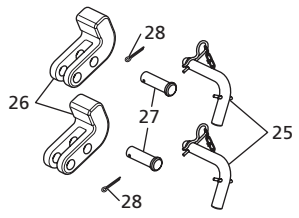

RK-01370 LOCK OUT PARTS LIST				
ITEM	DESCRIPTION	PART NUMBER	QTY.	WEIGHT LBS [KG]
25	Pin, "L" Assembly	XA-01429	2	0.92 [0.42]
26	Lockout Stop	XA-01427	2	3.67 [1.66]
27	Pin, Shackle, .75 Diameter x 2.50" Long	XB-847	2	0.36 [0.16]
28	Pin, Cotter, .19" Diameter x 1.25" Long	XB-382	2	N/A

 Amendments and errors reserved. © SAF-HOLLAND, Inc.

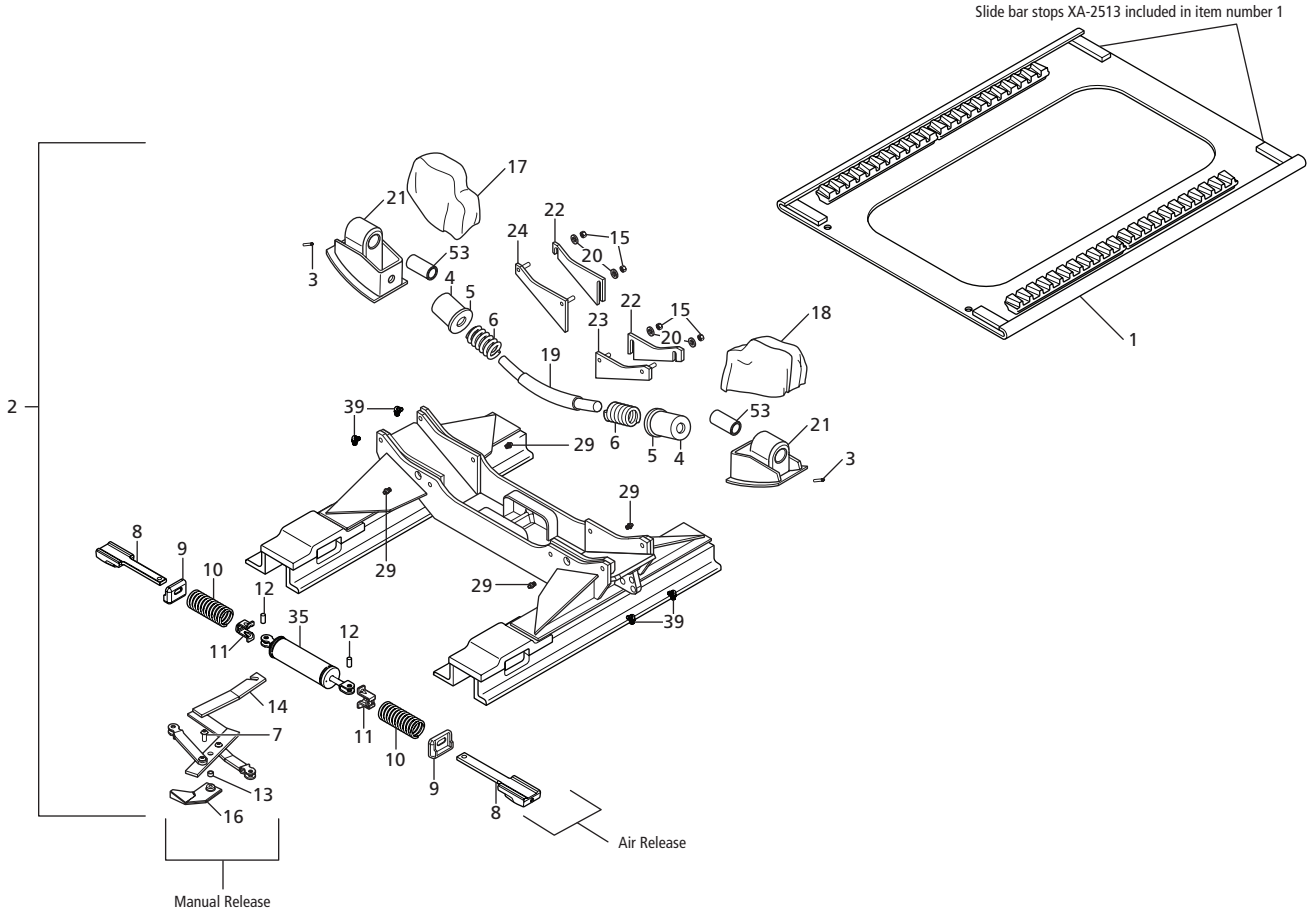

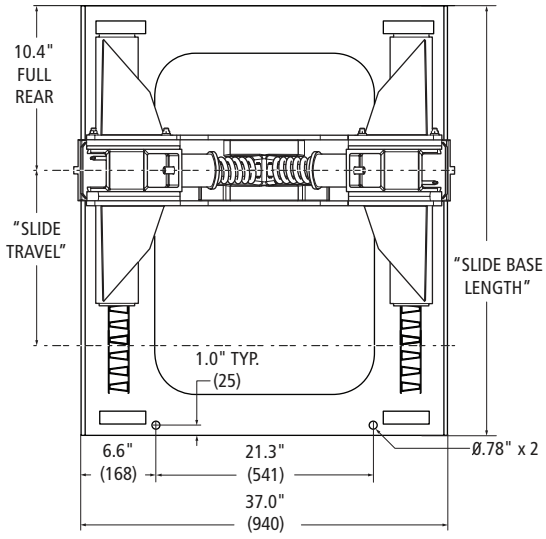

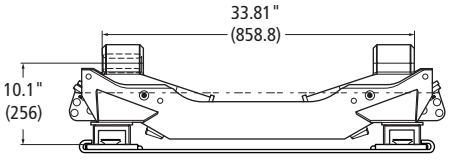

XL-FW10081PM-en-US Rev D 2016-03-01 Amendments and errors reserved. © SAF-HOLLAND, Inc.

KOMPENSATOR SERIES PARTS LIST

ITEM	DESCRIPTION	PART NUMBER	QTY.	WEIGHT LBS [KG]
3	Fitting, Grease	XB-H-38-F	2	0.02 [0.01]
4	Cushion	XB-0009	2	1.41 [0.64]
5	Washer, 1.31" I.D. x 4" O.D.	XA-1284-2	2	1.19 [0.54]
6	Spring	XB-01923	2	2.51 [1.14]
8	Shoe Assembly	XA-0372-A	2	3.10 [1.41]
9	Stop, Spring	XA-01586	2	0.34 [0.15]
10	Spring	XB-2502	2	1.03 [0.47]
11	Retainer, Spring	XA-2501	2	0.24 [0.11]
12	Pin, .50" Diameter x 1.12" Long	XA-2503	2	0.06 [0.03]
13	Bushing, .50" I.D. x .68" O.D. x .44" Long	XA-03082	1	0.02 [0.01]
14	Lever Assembly, Release	XA-03748	1	7.30 [3.31]
15	Nut, Jam, .50"-13	XB-C-59	4	0.03 [0.01]

KOMPENSATOR SERIES PARTS LIST

ITEM	DESCRIPTION	PART NUMBER	QTY.	WEIGHT LBS [KG]
16	Plate Assembly, Pivot	XA-02748-1	1	1.50 [0.68]
17	Cover, Dust, Left-Hand	XA-0128-L	1	0.70 [0.32]
18	Cover, Dust, Right-Hand	XA-0128-R	1	0.70 [0.32]
19	Bar, Tie	XA-39	1	7.95 [3.61]
20	Washer, Lock, .50" I.D. x .88" O.D.	XB-T-45-1	4	0.02 [0.01]
21	Shoe Assembly (Includes item #3)	XA-0024	2	30.30 [13.74]
22	Shim	XA-0014	2	0.08 [0.04]
23	Plate , Bearing, Right-Hand	XA-01997	1	1.25 [0.57]
24	Plate , Bearing, Left-Hand	XA-01998	1	2.75 [1.25]
29	Fittings, Grease	XB-H-38	4	0.01 [0.00]
35	Cylinder Assembly, Air	XA-2524-R	1	5.34 [2.42]
39	Fittings, Grease 90°	XB-H-38-A	4	0.03 [0.01]
53	Cushion, Rubber	XB-0011	2	0.37 [0.17]

FW **-72** X * * **

Komensator Inboard with Angle Height	Slide Travel	L= Left R= Right	Options (See Chart)

Example: FW35-7201X1L00



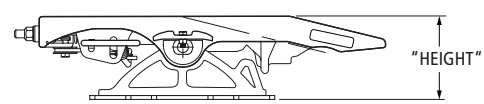

Height is measured from Face of Top Plate to Frame Rail

**AVAILABLE TOP PLATES

FW35	FW8
FW31	FW83
FW33	FWS1
FW17	FW2000
FWAL	

REF. FW PART NO.	SLIDE TRAVEL	SLIDE BASE LENGTH	SLIDE BRACKET PART NO.	SLIDE BRACKET WEIGHT	SLIDE BASE PART NO.	SLIDE BASE WEIGHT LBS [KG]
FW**-7201X1L__	10.7"	38.9"	XA-7201	307.00 [139.25]	XA-0284-1	217.00 [98.43]
FW**-7201X2L__	16.8"	45.0"			XA-0284-2	236.00 [107.05]
FW**-7201X3L__	24.5"	52.6"			XA-0284-3A	293.00 [132.90]
FW**-7201X4L__	41.3"	69.5"			XA-0284-4	378.00 [171.46]
FW**-7201X5L__	53.6"	82.0"			XA-0284-5	451.00 [204.57]
FW**-7201X6L__	65.8"	94.0"			XA-0284-6	517.00 [234.51]

** Fifth wheel model number.
__ See option code per fifthwheel assembly.

RK-01370 Lock Out

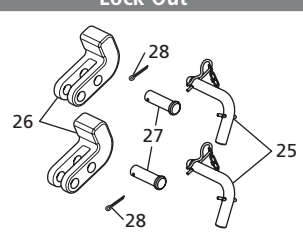

RK-01370 LOCK OUT PARTS LIST

ITEM	DESCRIPTION	PART NUMBER	QTY.	WEIGHT LBS [KG]
25	Pin, "L" Assembly	XA-01429	2	
26	Lockout Stop	XA-01427	2	
27	Pin, Shackle, .75 Diameter x 2.50" Long	XB-847	2	
28	Pin, Cotter, .19" Diameter x 1.25" Long	XB-382	2	

 Amendments and errors reserved. © SAF-HOLLAND, Inc.

Kompensator Inboard with Angle Exploded View

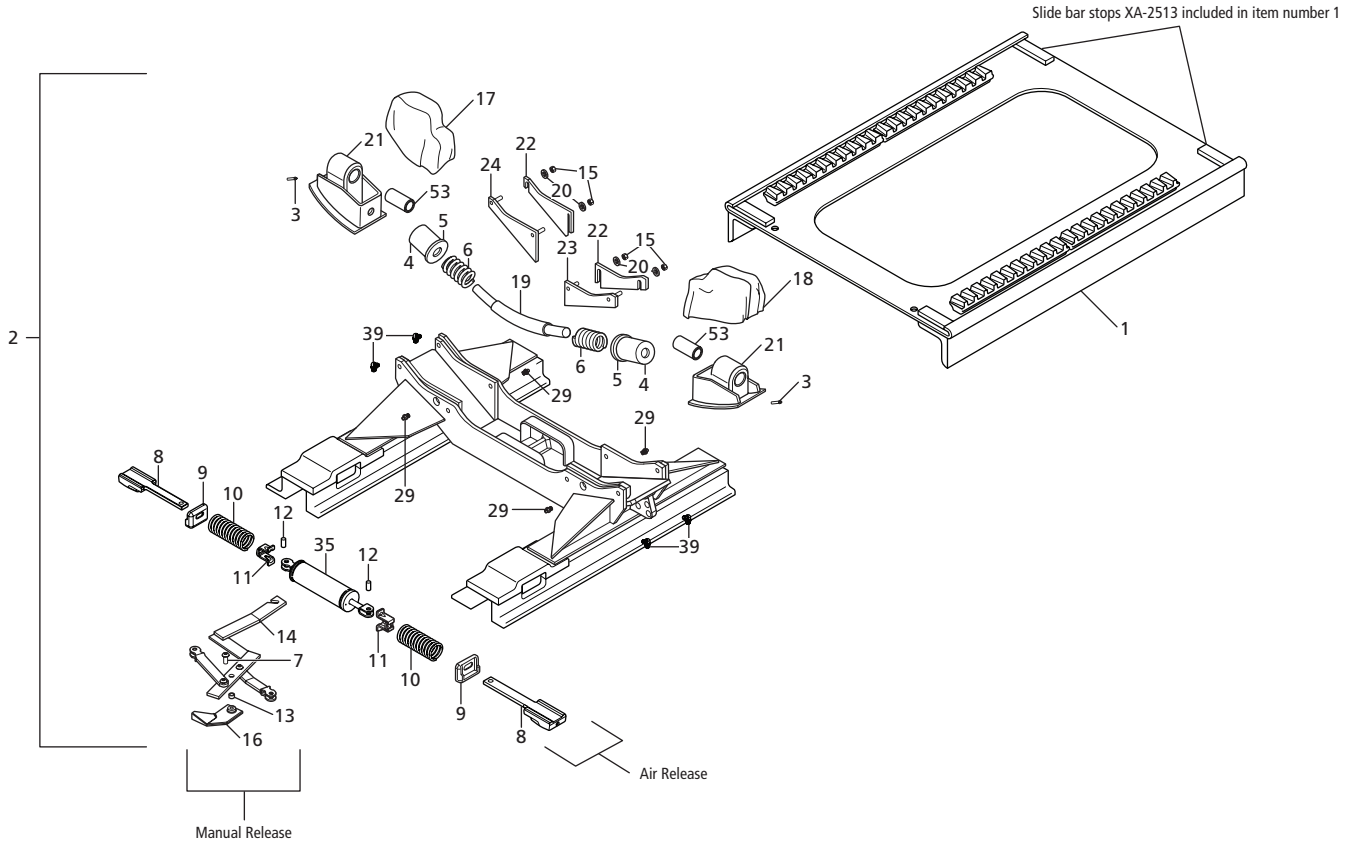

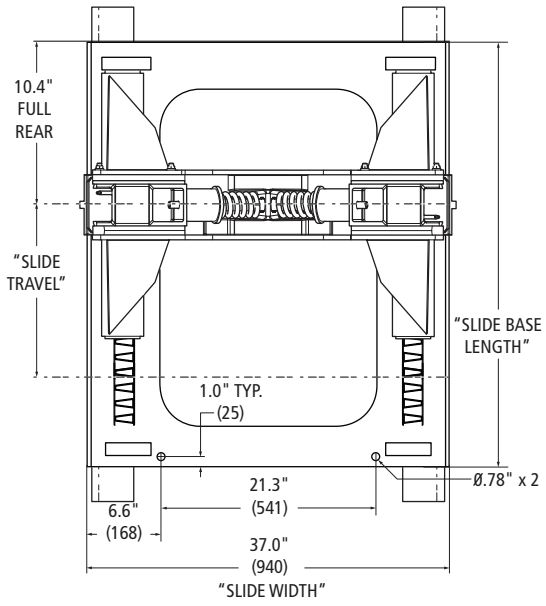

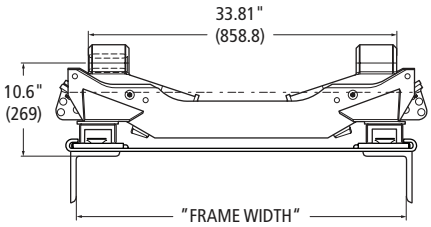

See option codes for angle size.

 Amendments and errors reserved. © SAF-HOLLAND, Inc.

KOMPENSATOR SERIES PARTS LIST				
ITEM	DESCRIPTION	PART NUMBER	QTY.	WEIGHT LBS [KG]
3	Fitting, Grease	XB-H-38-F	2	0.02 [0.01]
4	Cushion	XB-0009	2	1.41 [0.64]
5	Washer, 1.31" I.D. x 4" O.D.	XA-1284-2	2	1.19 [0.54]
6	Spring	XB-01923	2	2.51 [1.14]
8	Shoe Assembly	XA-0372-A	2	3.10 [1.41]
9	Stop, Spring	XA-01586	2	0.34 [0.15]
10	Spring	XB-2502	2	1.03 [0.47]
11	Retainer, Spring	XA-2501	2	0.24 [0.11]
12	Pin, .50" Diameter x 1.12" Long	XA-2503	2	0.06 [0.03]
13	Bushing, .50" I.D. x .68" O.D. x .44" Long	XA-03082	1	0.02 [0.01]
14	Lever Assembly, Release	XA-03748	1	7.30 [3.31]
15	Nut, Jam, .50"-13	XB-C-59	4	0.03 [0.01]
16	Plate Assembly, Pivot	XA-02748-1	1	1.50 [0.68]
17	Cover, Dust, Left-Hand	XA-0128-L	1	0.70 [0.32]
18	Cover, Dust, Right-Hand	XA-0128-R	1	0.70 [0.32]
19	Bar, Tie	XA-39	1	7.95 [3.61]
20	Washer, Lock, .50" I.D. x .88" O.D.	XB-T-45-1	4	0.02 [0.01]
21	Shoe Assembly (Includes item #3)	XA-0024	2	30.30 [13.74]
22	Shim	XA-0014	2	0.08 [0.04]
23	Plate , Bearing, Right-Hand	XA-01997	1	1.25 [0.57]
24	Plate , Bearing, Left-Hand	XA-01998	1	2.75 [1.25]
29	Fittings, Grease	XB-H-38	4	0.01 [0.00]
35	Cylinder Assembly, Air	XA-2524-R	1	5.34 [2.42]
39	Fittings, Grease 90°	XB-H-38-A	4	0.03 [0.01]
53	Cushion, Rubber	XB-0011	2	0.37 [0.17]

RK-01370
Lock Out

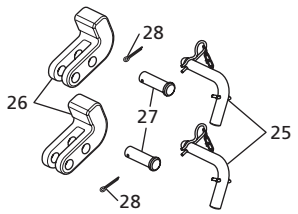

RK-01370 LOCK OUT PARTS LIST				
ITEM	DESCRIPTION	PART NUMBER	QTY.	WEIGHT LBS [KG]
25	Pin, "L" Assembly	XA-01429	2	
26	Lockout Stop	XA-01427	2	
27	Pin, Shackle, .75 Diameter x 2.50" Long	XB-847	2	
28	Pin, Cotter, .19" Diameter x 1.25" Long	XB-382	2	

 Amendments and errors reserved. © SAF-HOLLAND, Inc.



FW **-72** G * * **

Komensator Inboard with Angle Height	Frame Width	Slide Travel	L= Left R= Right	Options (See Chart)

Example: FW35-7201G1L00

**AVAILABLE TOP PLATES	
FW35	FW8
FW31	FW83
FW33	FWS1
FW17	FW2000
FWAL	

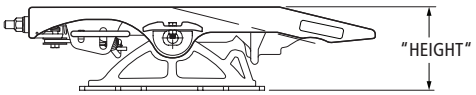

Height is measured from Face of Top Plate to Frame Rail

REF. FW PART NUMBER	SLIDE TRAVEL	SLIDE BASE LENGTH	SLIDE BRACKET PART NUMBER	SLIDE BRACKET WEIGHT	SLIDE BASE PART NUMBER	SLIDE BASE WEIGHT LBS [KG]
FW**-7201G1L__	10.7"	38.9"	XA-7201	307.00 [139.25]	XA-09790-1	308.00 [139.71]
FW**-7201G2L__	16.8"	45.0"			XA-09790-2	345.00 [156.49]
FW**-7201G3L__	24.5"	52.6"			XA-09790-3	415.00 [188.24]
FW**-7201G4L__	41.3"	69.5"			XA-09790-4	476.00 [215.91]
FW**-7201G5L__	53.6"	82.0"			XA-09790-5	620.00 [281.23]
FW**-7201G6L__	65.8"	94.0"			XA-09790-6	720.00 [326.59]

** Fifth wheel model number.
__ See option code per fifthwheel assembly.

FRAME WIDTH CODE CHART			
FRAME WIDTH CODE LETTER	FRAME WIDTH	FRAME WIDTH CODE LETTER	FRAME WIDTH
A	33.25"	**G†**	**34.00"**
B	33.38"	H	34.12"
C	33.50"	J	34.25"
D	33.62"	K	34.38"
E	33.75"	L	34.50"
F	33.88"		

† Standard,
Frame code letter "X" indicates that the slider is not supplied with mounting angles. See option codes for other options such as angle size.

OPTION CODE CHART	
OPTION CODE (**)	MOUNTING ANGLE SIZE
Blank	.50" X 4" X 4"
70	.50" X 5" X 5"
74	.50" X 4" X 6"

XL-FW10081PM-en-US Rev D 2016-03-01 Amendments and errors reserved. © SAF-HOLLAND, Inc.

THIS PAGE INTENTIONALLY LEFT BLANK

 Amendments and errors reserved. © SAF-HOLLAND, Inc.

pod® parts on demand

QUICK & EASY PARTS ONLINE

SEARCH

Parts Knowledge at the Tip of Your Finger

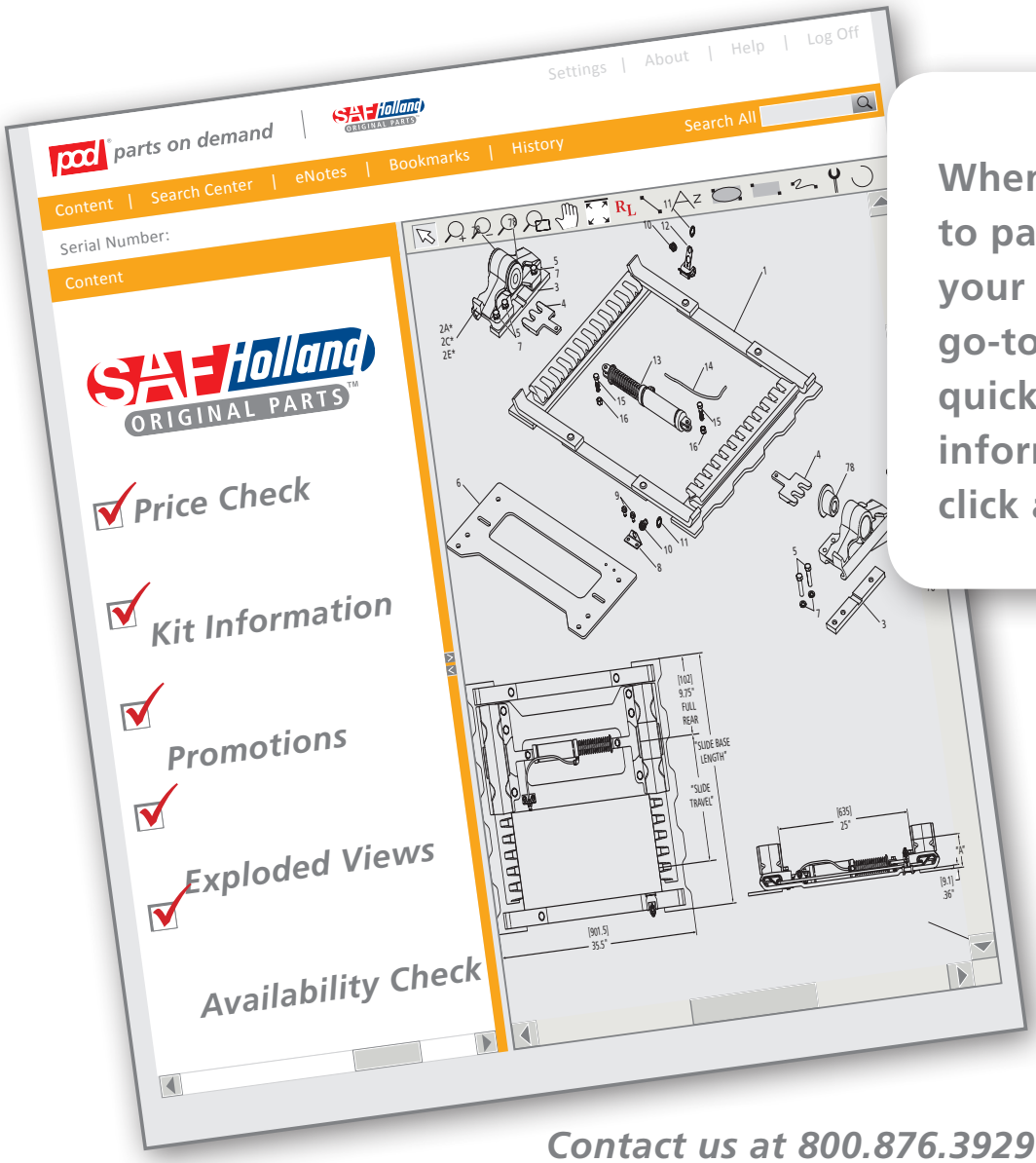

When it comes to parts, become your customers' go-to source with quick and accurate information just a click away.

SAF Holland

Holland

NEWAY

Contact us at 800.876.3929 to learn more

SAF Holland ORIGINAL PARTS™

Holland®
SAF-HOLLAND Group

ACCESSORIES



SAF Holland
ORIGINAL PARTS™

Air Release

FW35 & FW33

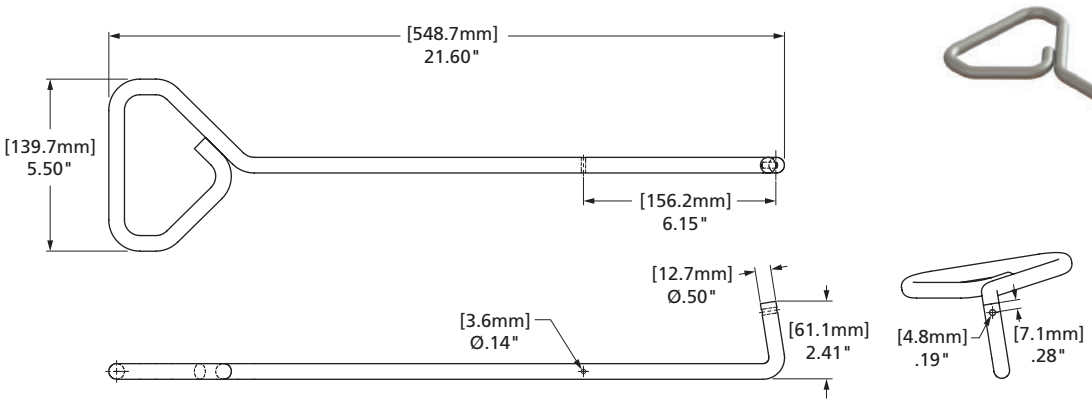

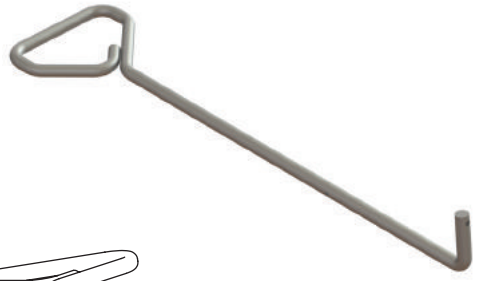

PART NUMBER	WEIGHT LBS [KG]
XA-07766-1	1.90 [0.86]

FW31 (E-Coat)

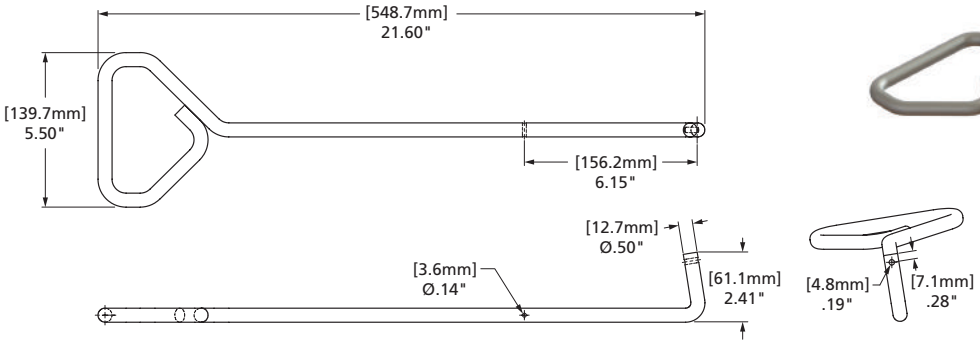



PART NUMBER	WEIGHT LBS [KG]
XA-10452	1.93 [0.88]

FW17

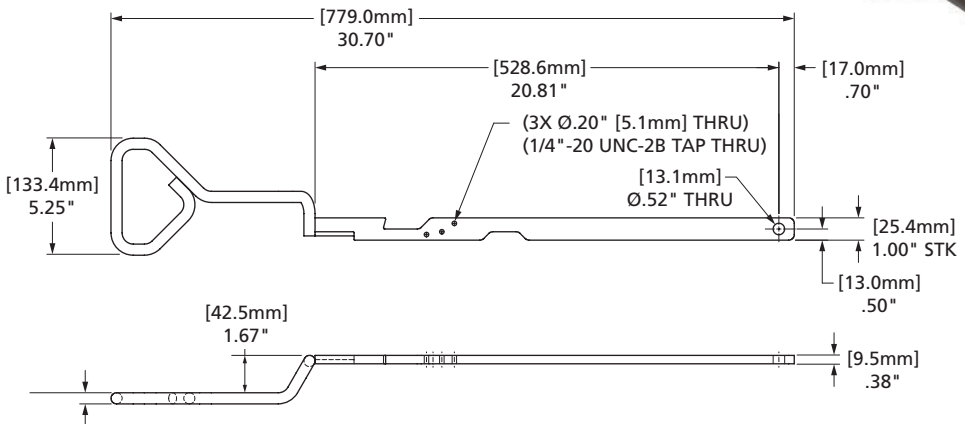

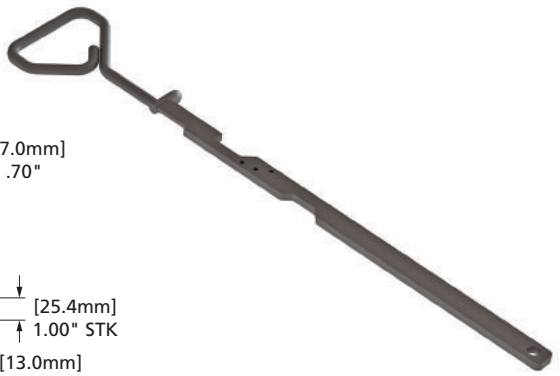

PART NUMBER	WEIGHT LBS [KG]
XA-11384	3.25 [1.47]

XL-FW10081PM-en-US Rev D 2016-03-01 Amendments and errors reserved. © SAF-HOLLAND, Inc.

Air Release

FW8 & FW83

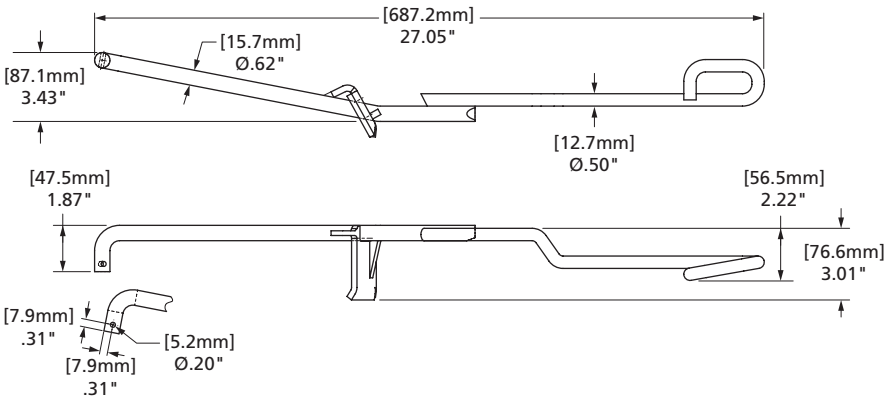



PART NUMBER	WEIGHT LBS [KG]
XA-10161	2.81 [1.27]

FWS1 & FWS2

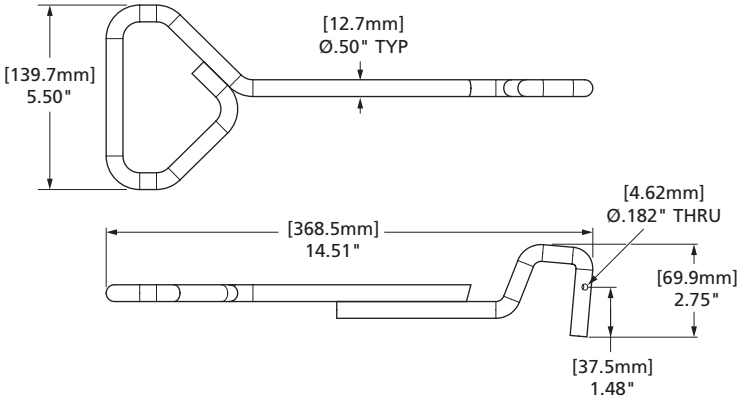



PART NUMBER	WEIGHT LBS [KG]
XA-11112	1.80 [0.82]

FW2800/FW2900 & FW2870-03184

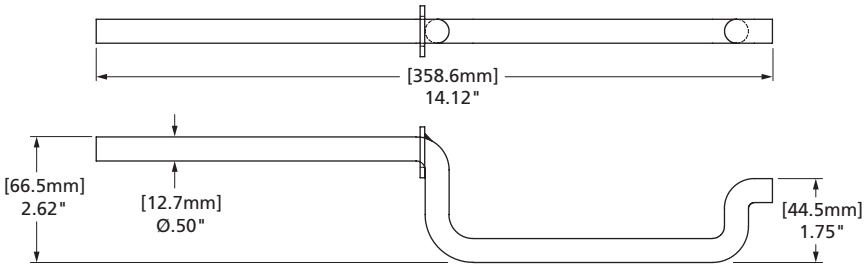



PART NUMBER	WEIGHT LBS [KG]
XA-1707-16	1.00 [0.45]

 Amendments and errors reserved. © SAF-HOLLAND, Inc.

SAF-HOLLAND Group

Air Release

FW35-03344, FW67 & FW69

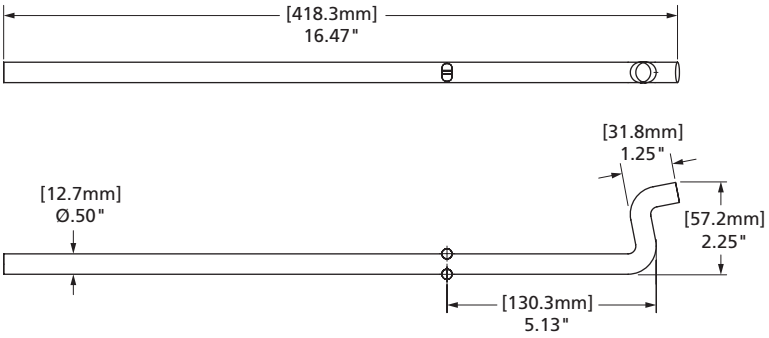



PART NUMBER	WEIGHT LBS [KG]
XA-09041	1.00 [0.45]

FW1560-C

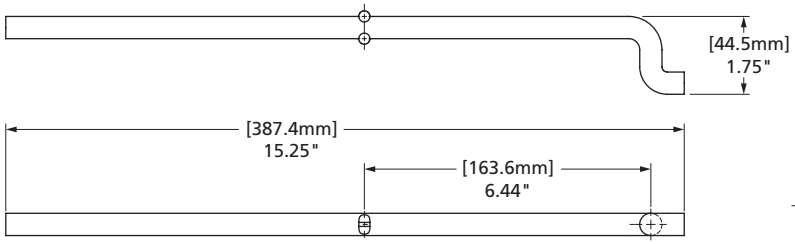



PART NUMBER	WEIGHT LBS [KG]
XA-1707-5	0.89 [0.40]

XL-FW10081PM-en-US Rev D 2016-03-01 Amendments and errors reserved. © SAF-HOLLAND, Inc.

LH/RH Manual Release

FW35 & FW33

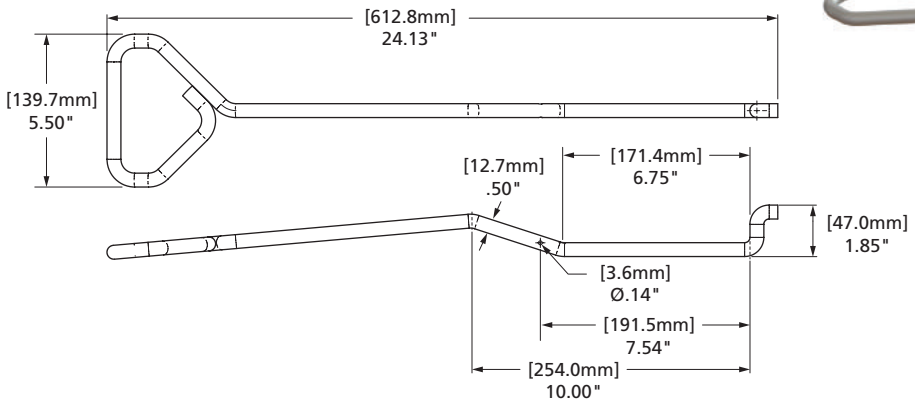



PART NUMBER	WEIGHT LBS [KG]
XA-07151-1	2.01 [0.91]

FW35 & FW31 (E-Coat)

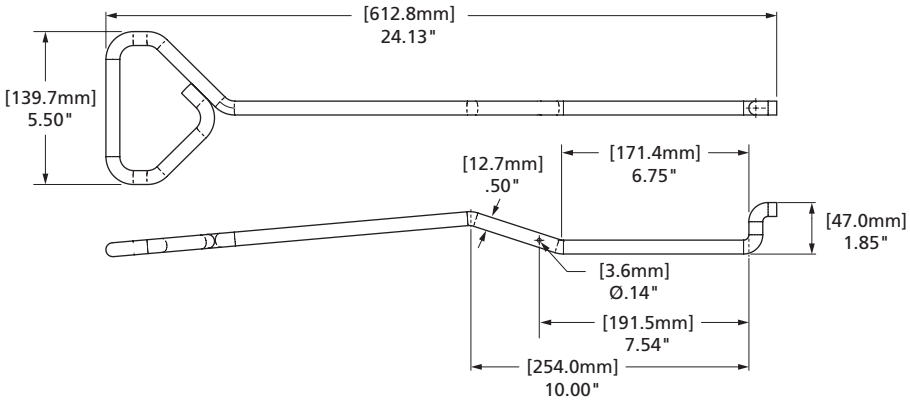



PART NUMBER	WEIGHT LBS [KG]
XA-10344	2.00 [0.91]

 Amendments and errors reserved. © SAF-HOLLAND, Inc.

SAF-HOLLAND Group

LH/RH Manual Release

FW16

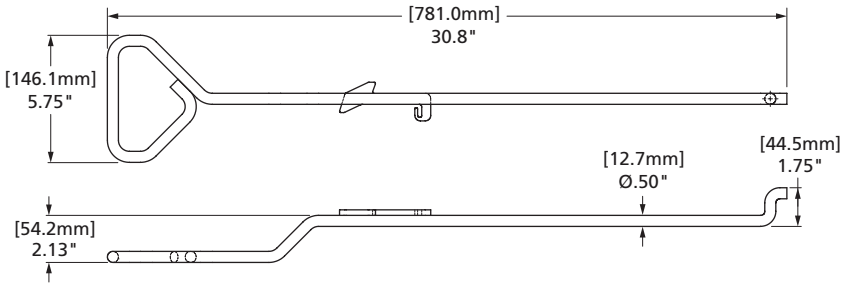



PART NUMBER	WEIGHT LBS [KG]
XA-11618-P	2.64 [1.20]

FW16 (Replacement)

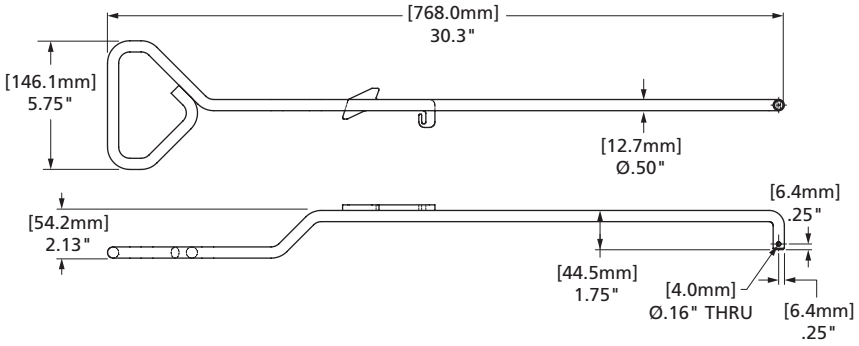



PART NUMBER	WEIGHT LBS [KG]
XA-11618-RP-P	2.62 [1.19]

XL-FW10081PM-en-US Rev D 2016-03-01 Amendments and errors reserved. © SAF-HOLLAND, Inc.

LH Manual Release

FW0070

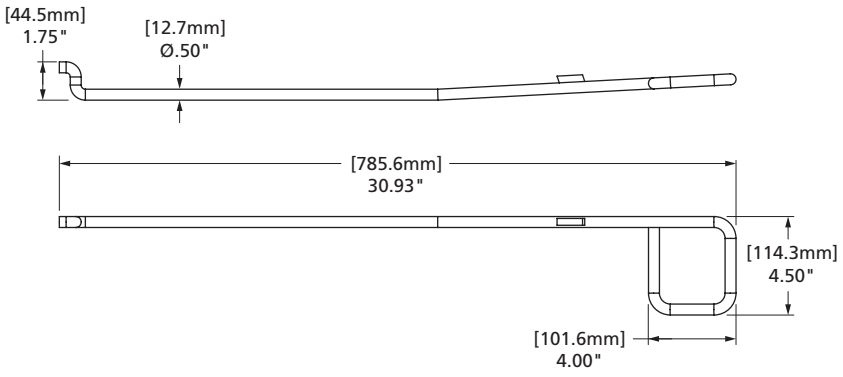



PART NUMBER	WEIGHT LBS [KG]
XA-03715	2.37 [1.08]

FW17

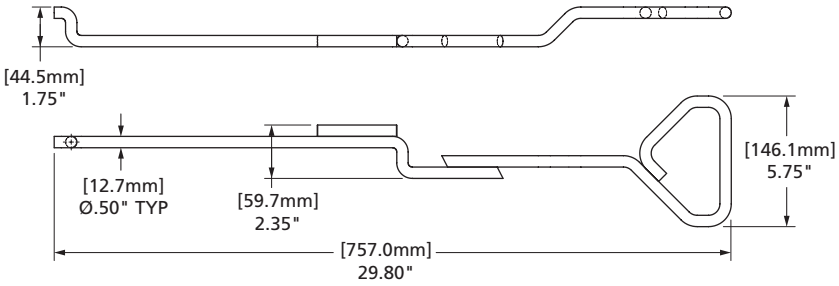

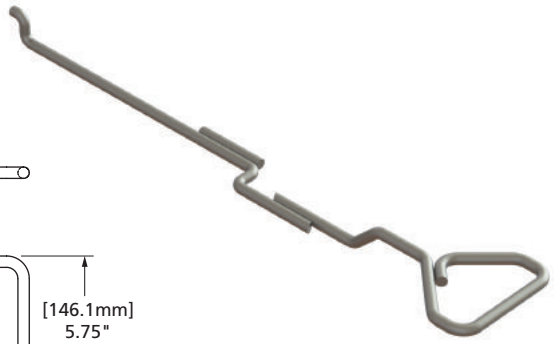

PART NUMBER	WEIGHT LBS [KG]
XA-10495	2.75 [1.25]

FWAL

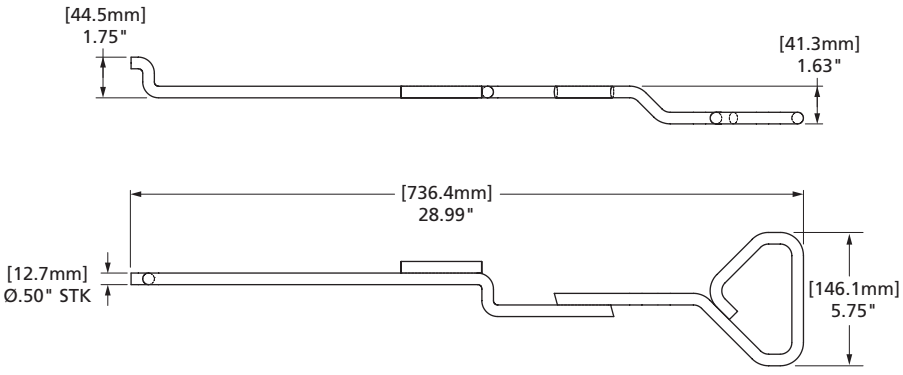



PART NUMBER	WEIGHT LBS [KG]
XA-10495-AL-P	2.51 [1.14]

 Amendments and errors reserved. © SAF-HOLLAND, Inc.

LH Manual Release

FW8 & FW83 GEN III

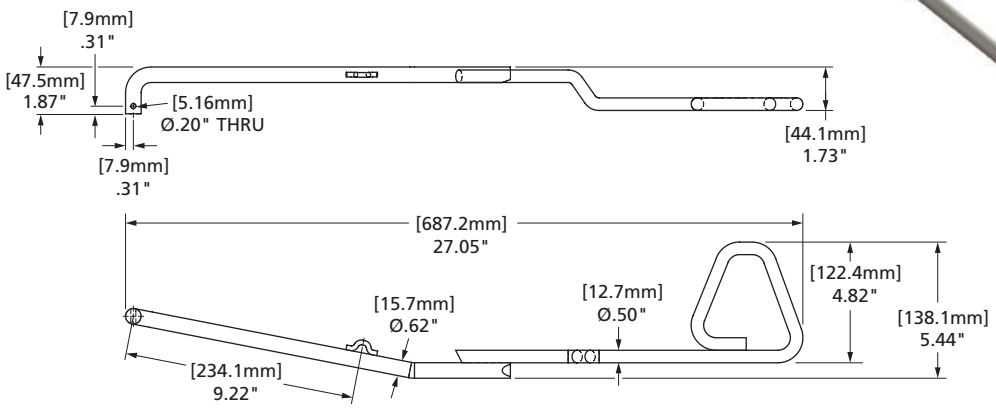



PART NUMBER	WEIGHT LBS [KG]
XA-09484	2.82 [1.28]

FW8 GEN II

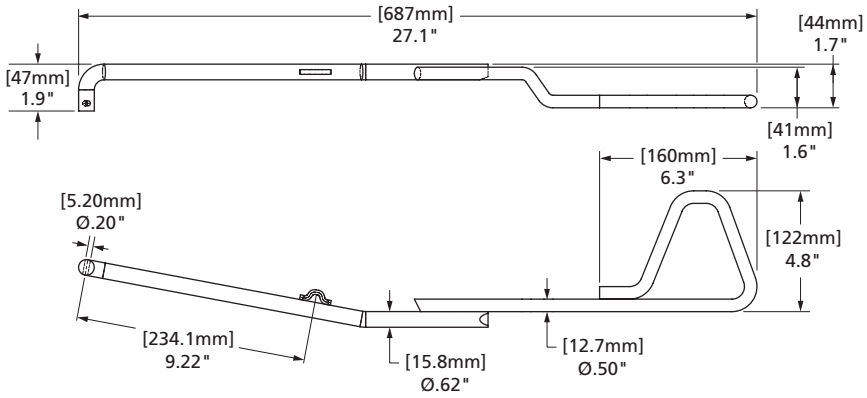



PART NUMBER	WEIGHT LBS [KG]
XA-09409	2.92 [1.32]

FWS1 & FWS2

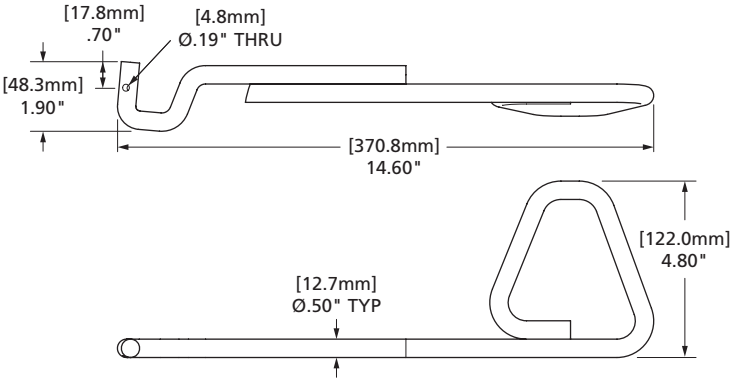



PART NUMBER	WEIGHT LBS [KG]
XA-10990	1.75 [0.79]

XL-FW10081PM-en-US Rev D 2016-03-01 Amendments and errors reserved. © SAF-HOLLAND, Inc.

LH Manual Release

FW2000

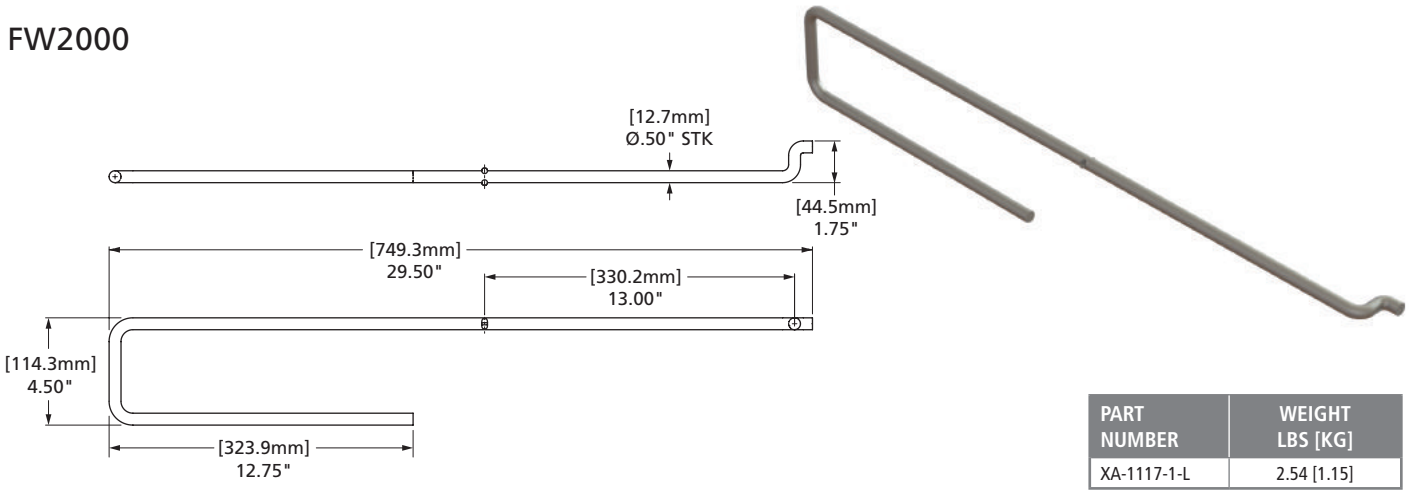

PART NUMBER	WEIGHT LBS [KG]
XA-1117-1-L	2.54 [1.15]

FW0070

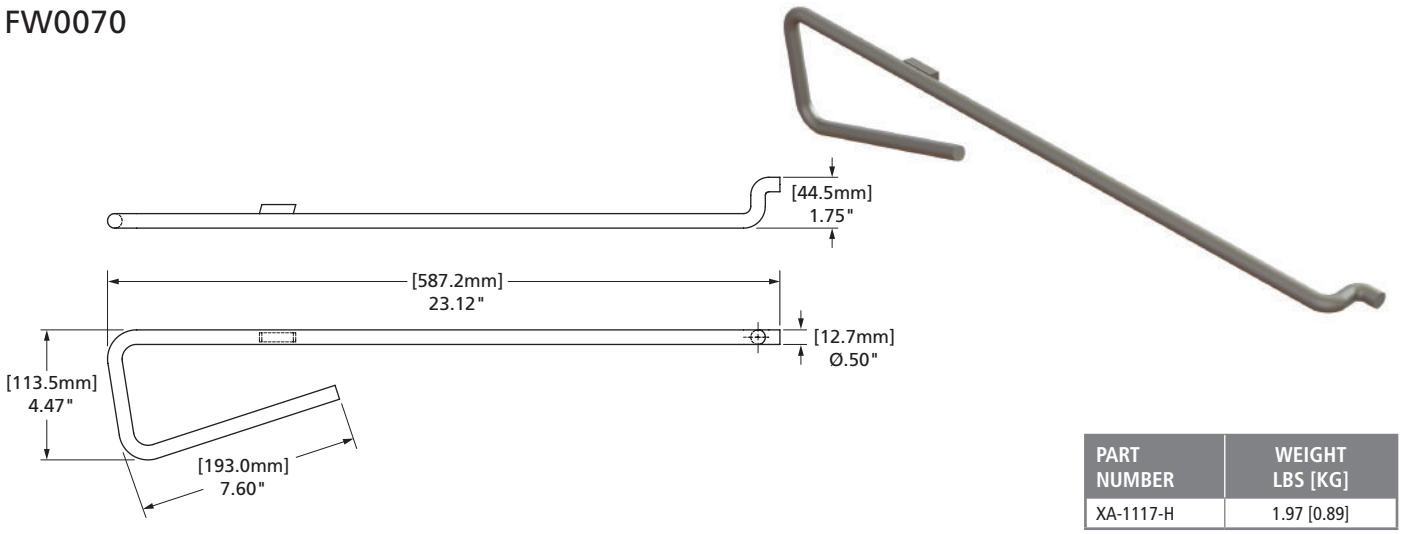

PART NUMBER	WEIGHT LBS [KG]
XA-1117-H	1.97 [0.89]

FW3500

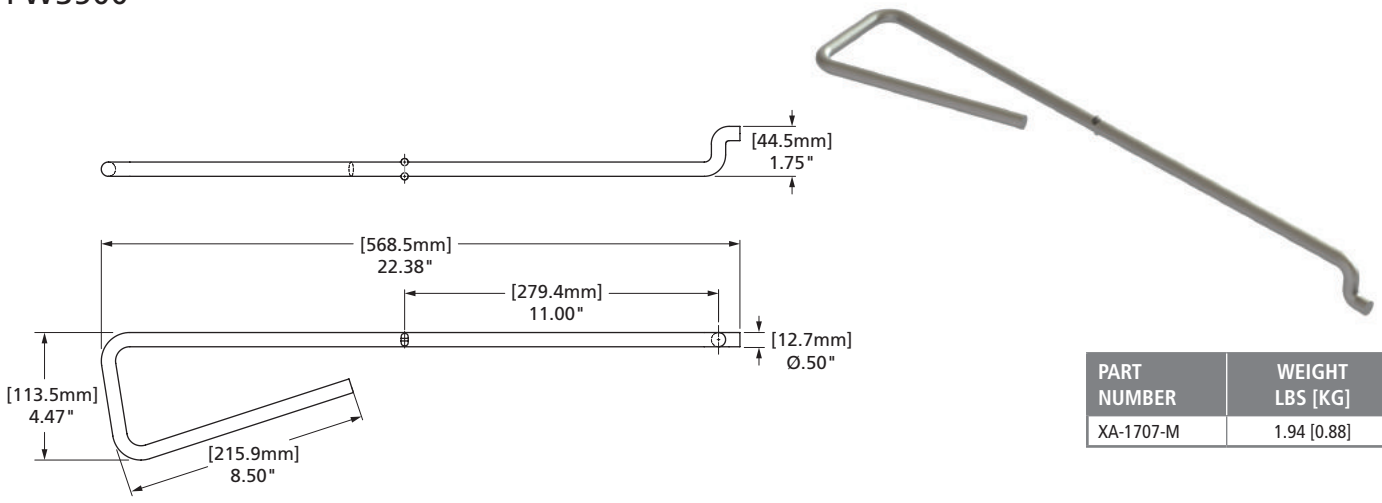

PART NUMBER	WEIGHT LBS [KG]
XA-1707-M	1.94 [0.88]

 Amendments and errors reserved. © SAF-HOLLAND, Inc.

LH Manual Release

FW0100/FW0165 & FW2080

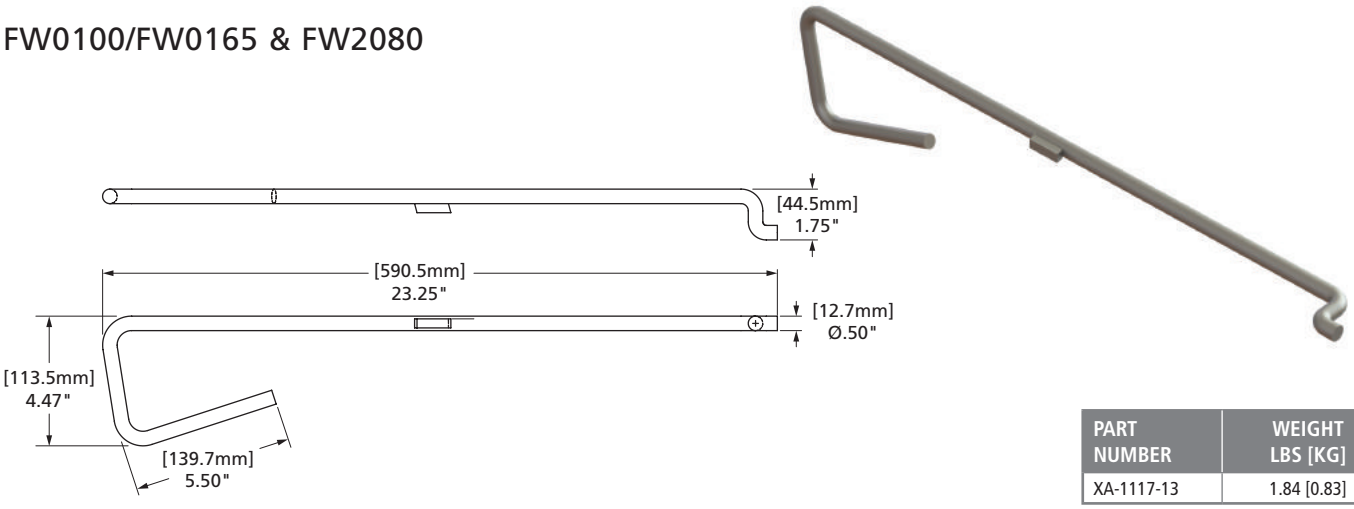

PART NUMBER	WEIGHT LBS [KG]
XA-1117-13	1.84 [0.83]

Simplex II/Castloc II Straight Pull

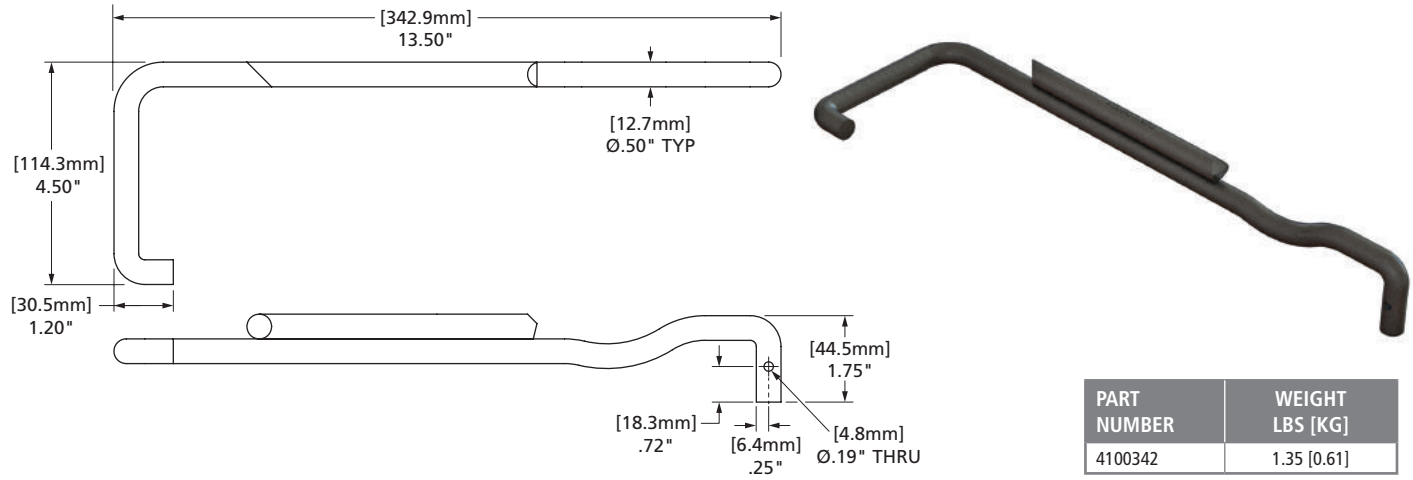

PART NUMBER	WEIGHT LBS [KG]
4100342	1.35 [0.61]

Simplex II Rotary Pull, Castloc II Rotary Pull

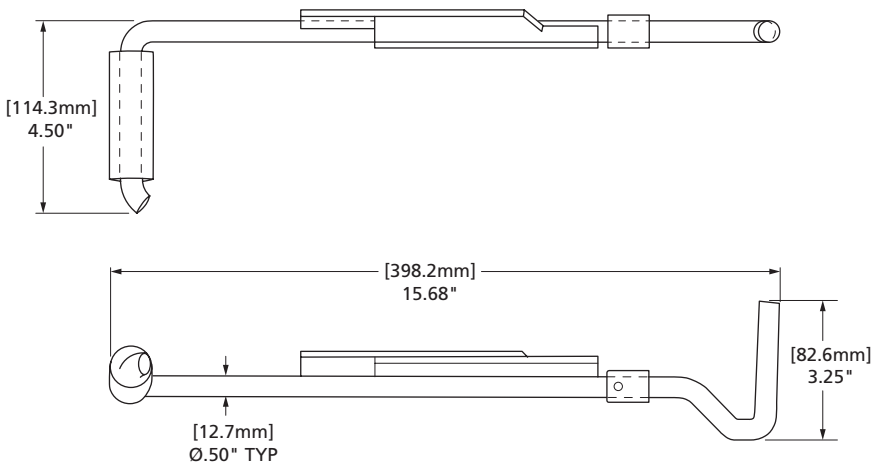

PART NUMBER	WEIGHT LBS [KG]
4100357	1.65 [0.75]

XL-FW10081PM-en-US Rev D 2016-03-01 Amendments and errors reserved. © SAF-HOLLAND, Inc.

LH Manual Release

FW1226

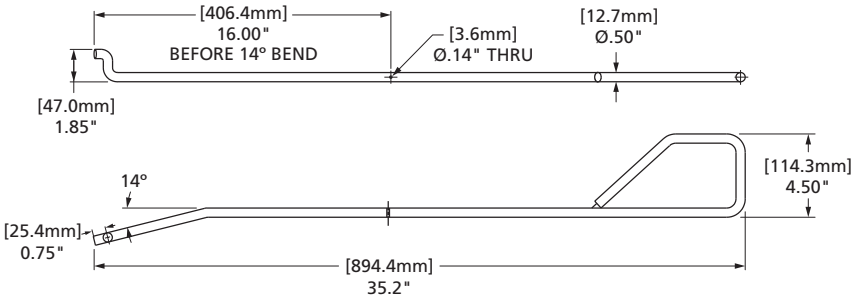

PART NUMBER	WEIGHT LBS [KG]
XA-07732	N/A

Simplex SE, Simplex Lite Straight Pull, Simplex Lite Rotary & Simplex II SE (Auto Indicator)

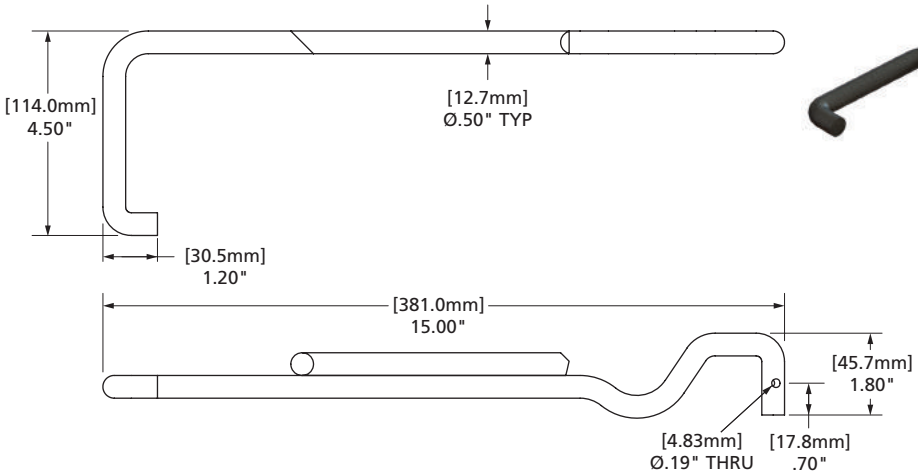



PART NUMBER	WEIGHT LBS [KG]
4100420	1.46 [0.66]

Simplex Lite Rotary (Auto Indicator)

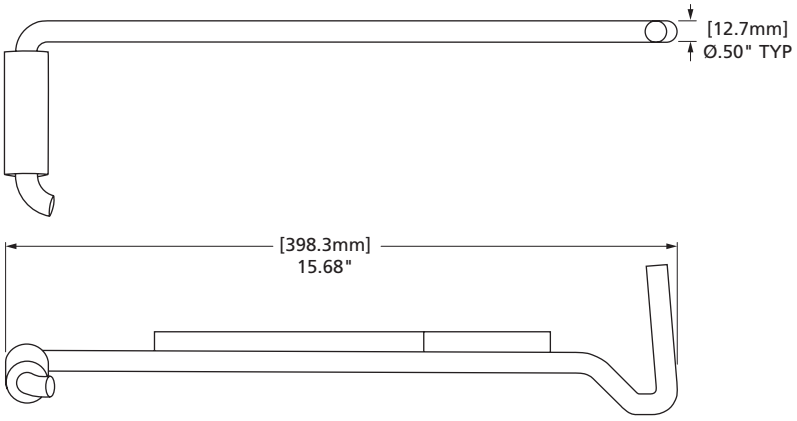

PART NUMBER	WEIGHT LBS [KG]
4100386	1.70 [0.77]

 Amendments and errors reserved. © SAF-HOLLAND, Inc.

LH Manual Release

FW8 & FW83 (Long Handle)

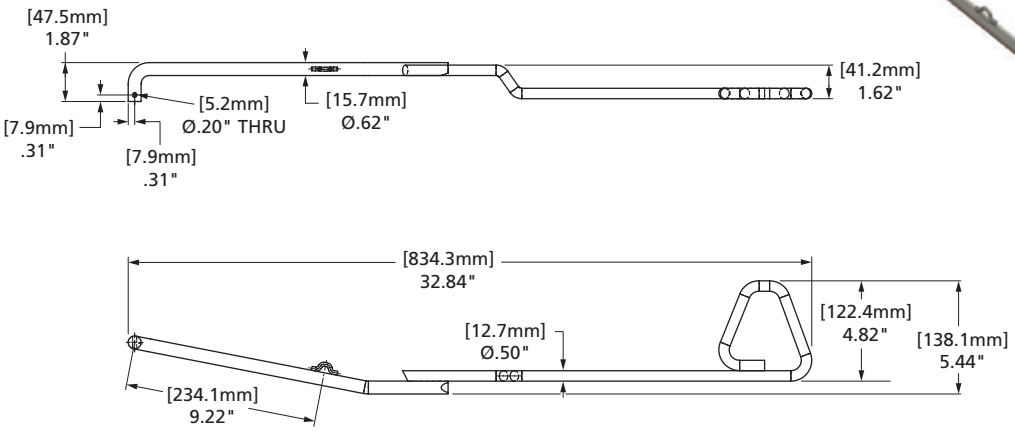



PART NUMBER	WEIGHT LBS [KG]
XA-09487	3.15 [1.43]

Simplex SE, Simplex Lite Straight Pull, Simplex Lite Rotary & Simplex II SE (Manual Indicator)

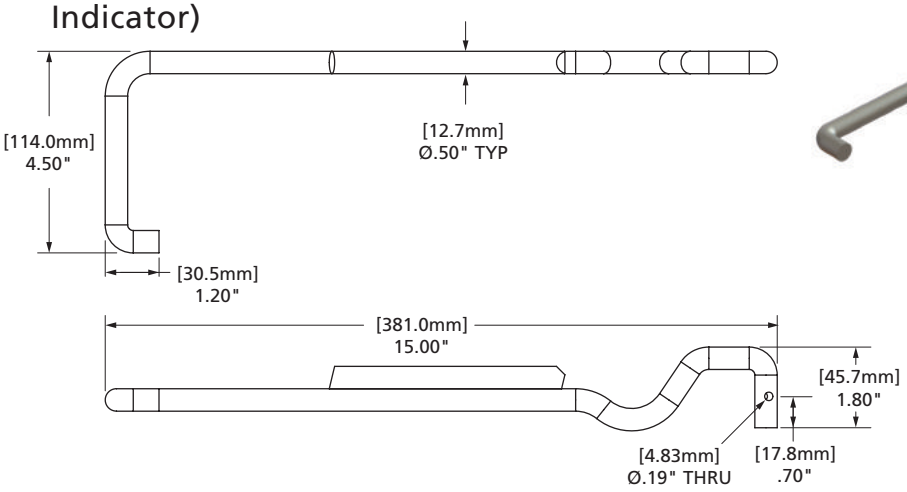



PART NUMBER	WEIGHT LBS [KG]
4100382	1.43 [0.65]

XL-FW10081PM-en-US Rev D 2016-03-01 Amendments and errors reserved. © SAF-HOLLAND, Inc.

LH Manual Release, Replacement

FW17 (For M Casting)

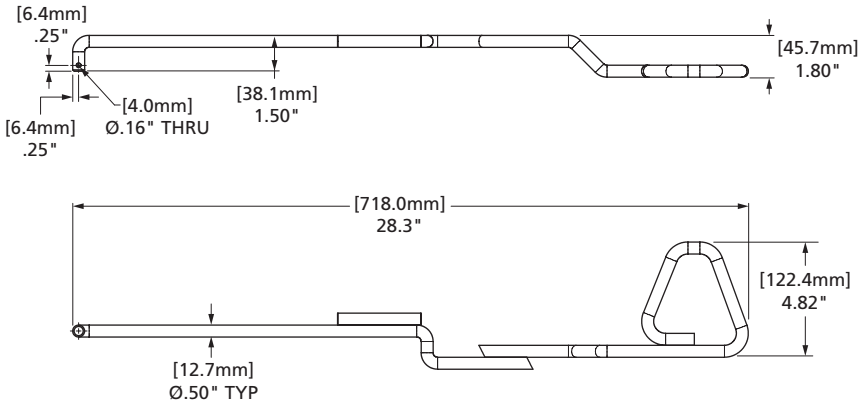



PART NUMBER	WEIGHT LBS [KG]
XA-10495-RP-M-P	2.61 [1.18

FW17

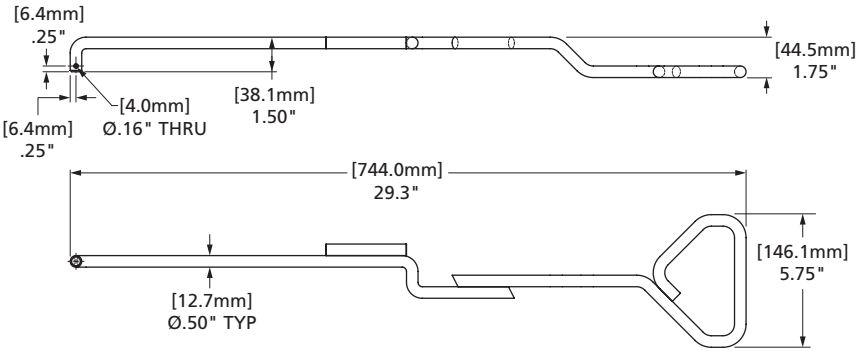



PART NUMBER	WEIGHT LBS [KG]
XA-10495-RP	2.72 [1.23]

Front/LH Manual Release

FW1226

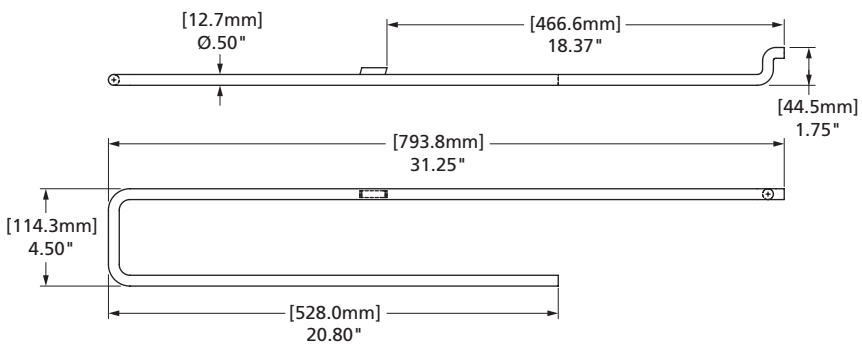

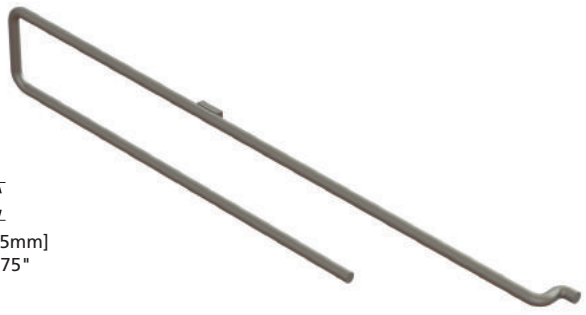

PART NUMBER	WEIGHT LBS [KG]
XA-1117-UP	3.12 [1.42]

 Amendments and errors reserved. © SAF-HOLLAND, Inc.

RH Manual Release

FW3500

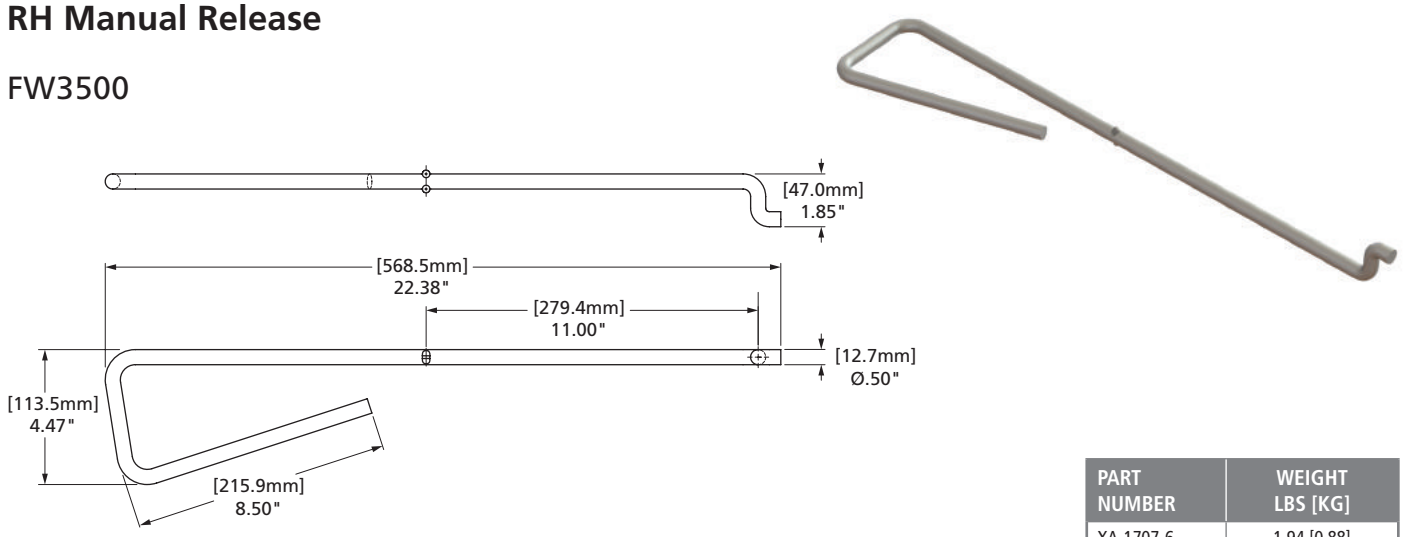

PART NUMBER	WEIGHT LBS [KG]
XA-1707-6	1.94 [0.88]

FW8 & FW83

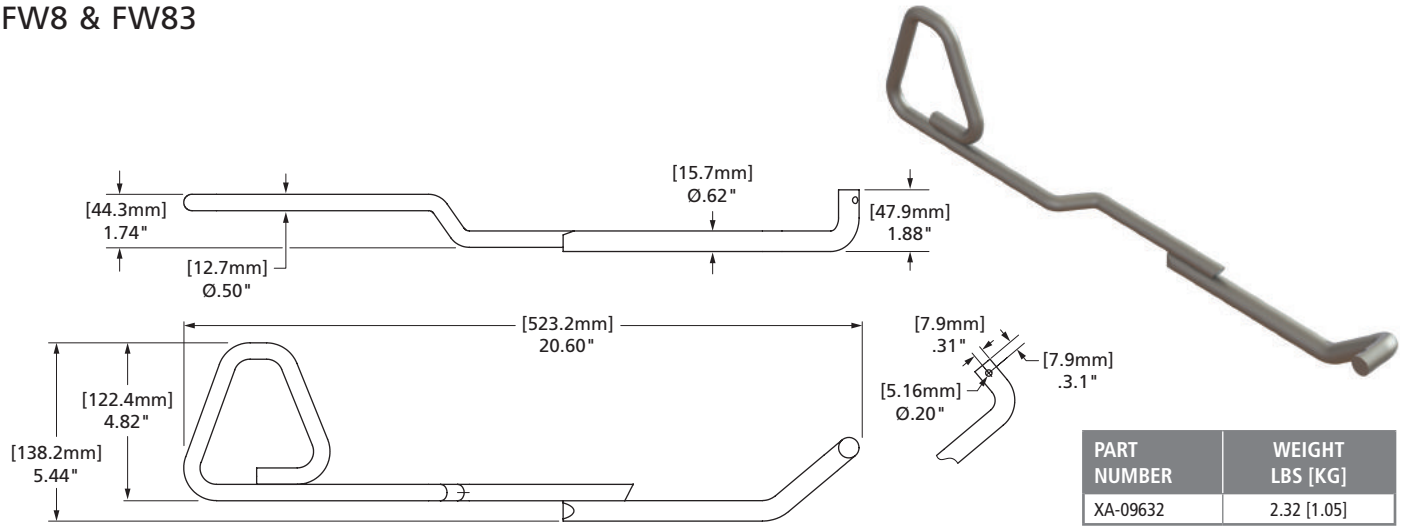

PART NUMBER	WEIGHT LBS [KG]
XA-09632	2.32 [1.05]

FW2000

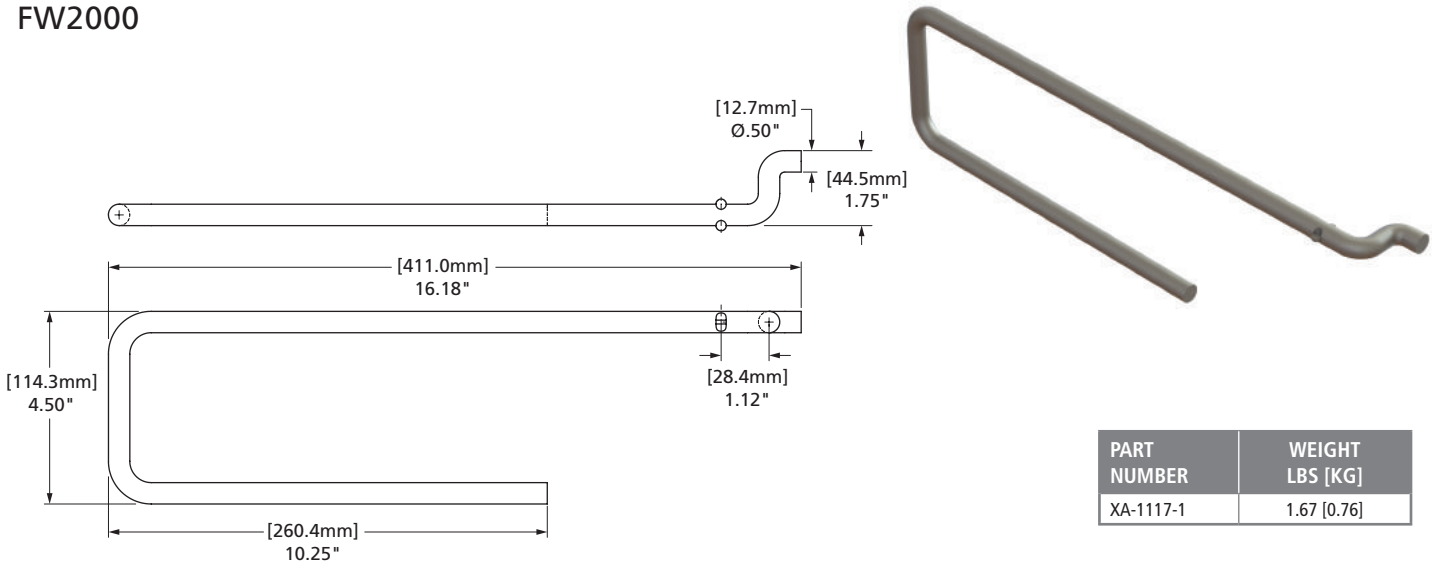

PART NUMBER	WEIGHT LBS [KG]
XA-1117-1	1.67 [0.76]

XL-FW10081PM-en-US Rev D 2016-03-01 Amendments and errors reserved. © SAF-HOLLAND, Inc.

RH Manual Release

Simplex II SE

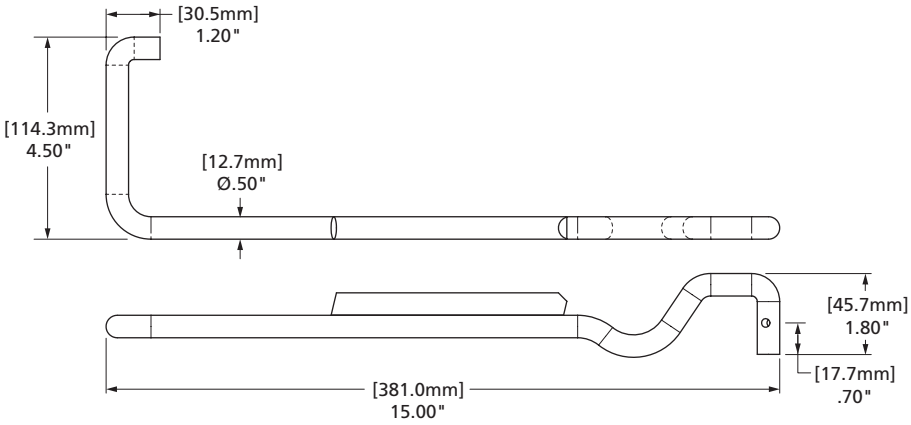



PART NUMBER	WEIGHT LBS [KG]
4100448	1.44 [0.65]

Simplex II

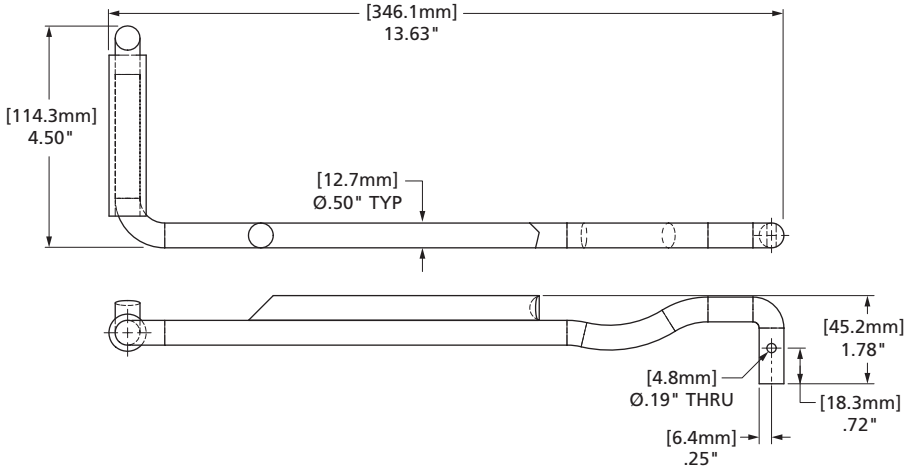



PART NUMBER	WEIGHT LBS [KG]
4100441	1.35 [0.61]

Simplex RH

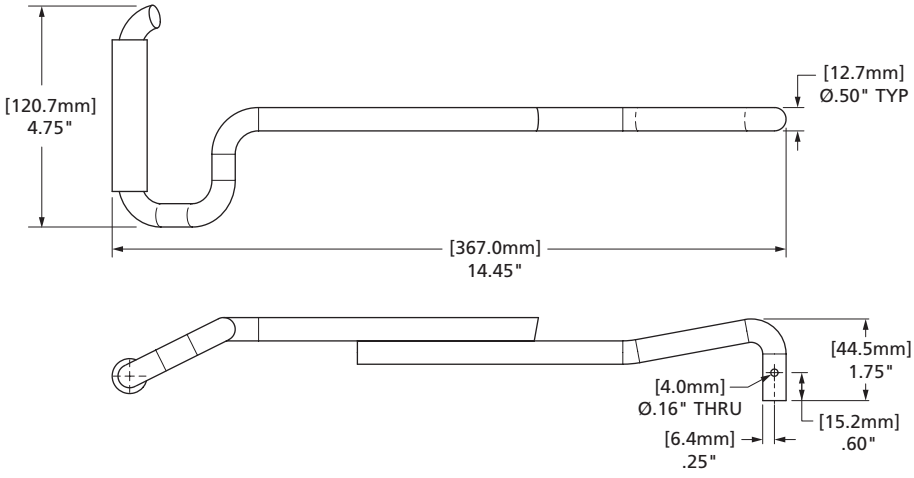



PART NUMBER	WEIGHT LBS [KG]
4100350	1.42 [0.64]

 Amendments and errors reserved. © SAF-HOLLAND, Inc.

SAF-HOLLAND Group

RH Manual Release

FW2800/FW2900

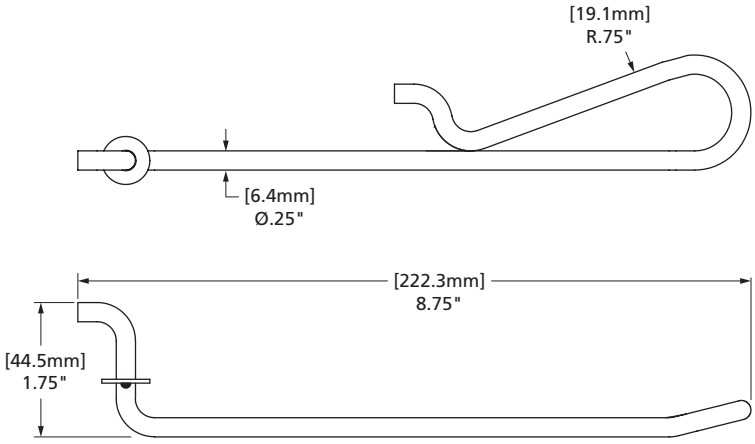



PART NUMBER	WEIGHT LBS [KG]
XA-3544-1-A	0.22 [0.10]

FW1226

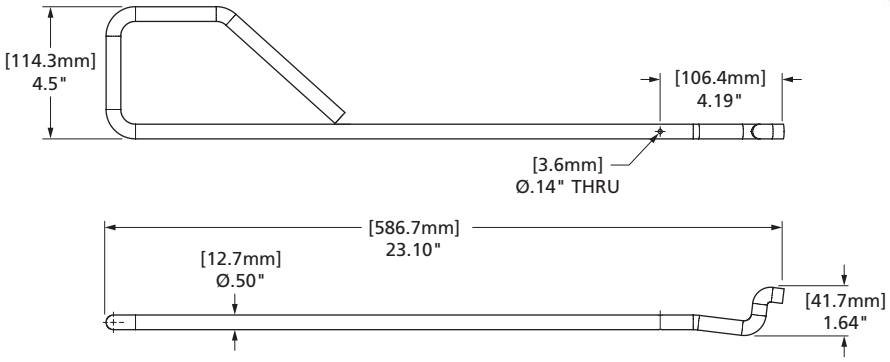



PART NUMBER	WEIGHT LBS [KG]
XA-0093	2.00 [0.91]

XL-FW10081PM-en-US Rev D 2016-03-01 Amendments and errors reserved. © SAF-HOLLAND, Inc.

Manual Release

FW0001/FW0002

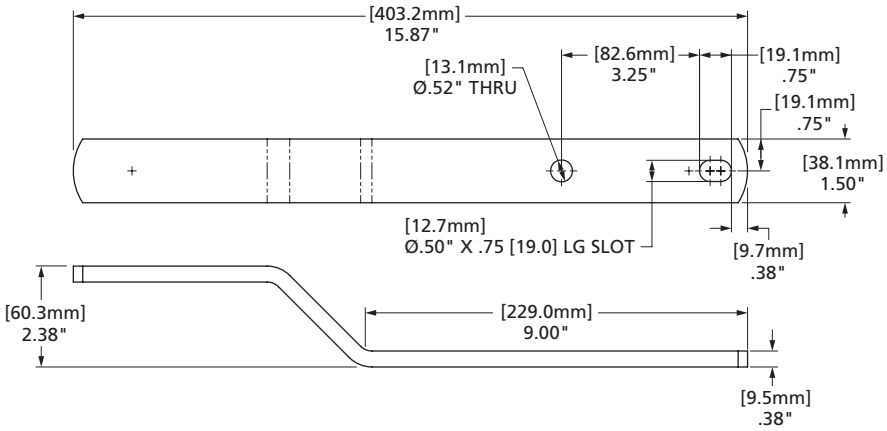



PART NUMBER	WEIGHT LBS [KG]
BFW0122	2.58 [1.17]

FW6000

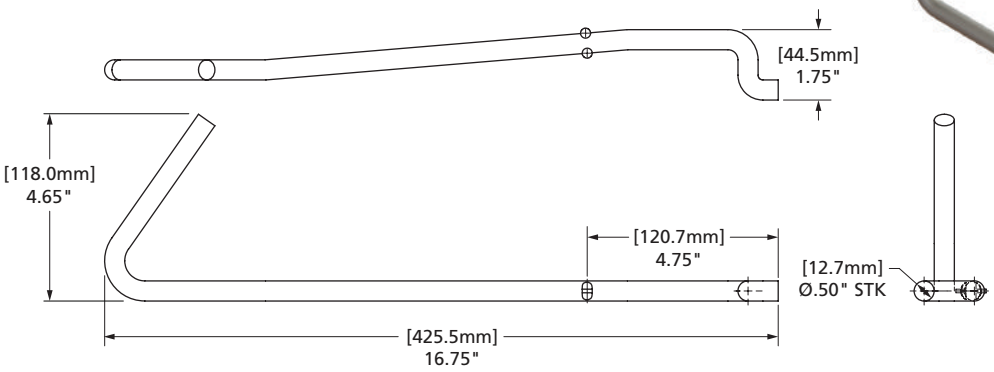

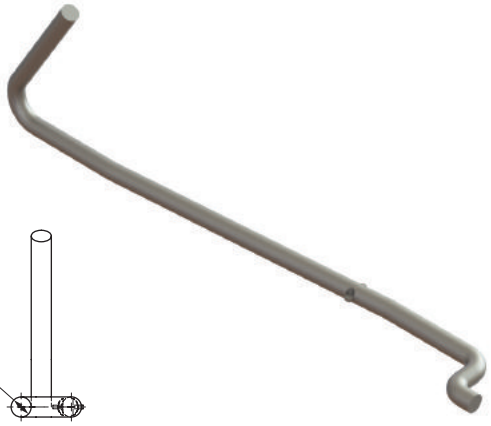

PART NUMBER	WEIGHT LBS [KG]
XA-6003	1.23 [0.56]

FW1900

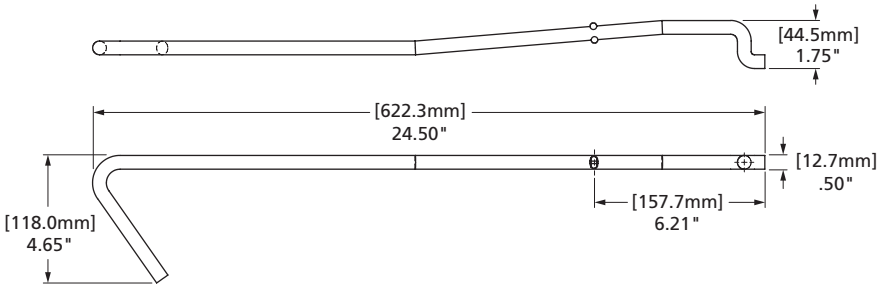



PART NUMBER	WEIGHT LBS [KG]
XA-1707-2	1.66 [0.75]

 Amendments and errors reserved. © SAF-HOLLAND, Inc.

Secondary Lock

FW8 & FW83

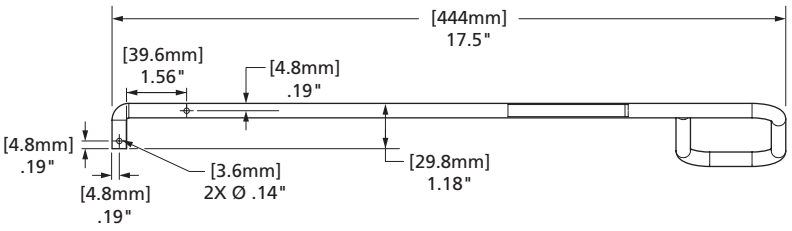

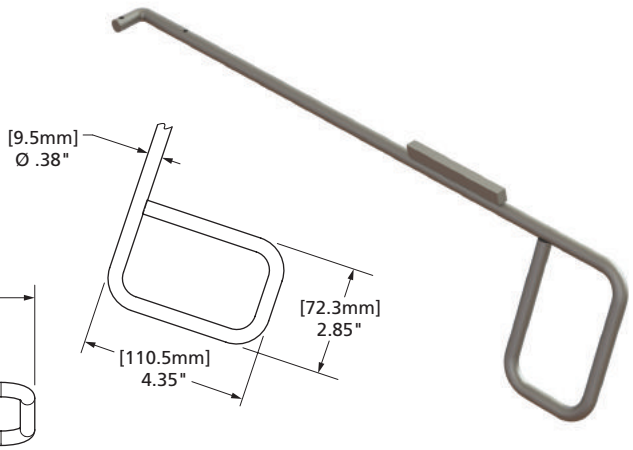

PART NUMBER	WEIGHT LBS [KG]
XA-06345	0.94 [0.43]

FW2000 & FW8

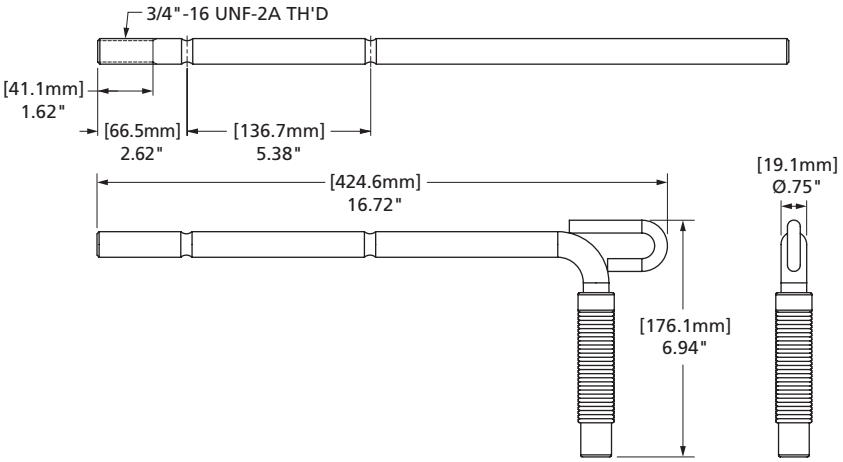



PART NUMBER	WEIGHT LBS [KG]
XA-1674	2.73 [1.27]

XL-FW10081PM-en-US Rev D 2016-03-01 Amendments and errors reserved. © SAF-HOLLAND, Inc.

Secondary Lock

FW0070

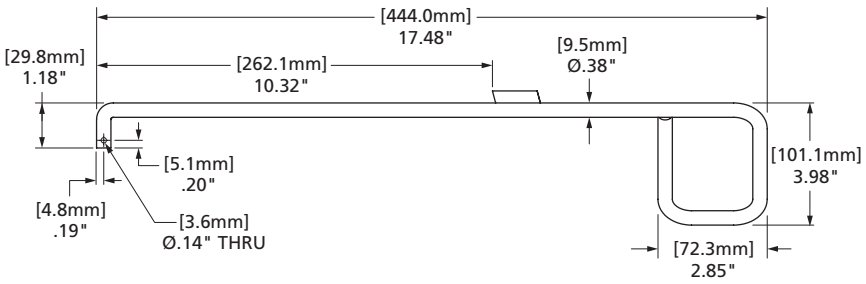



PART NUMBER	WEIGHT LBS [KG]
XA-FW-78	0.89 [0.40]

FW0100/FW0165 & FW2080

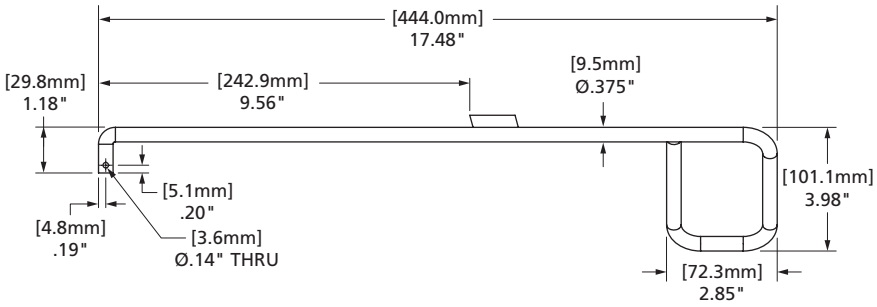



PART NUMBER	WEIGHT LBS [KG]
XA-FW-138	0.89 [0.40]

FW35-03344 & FW67

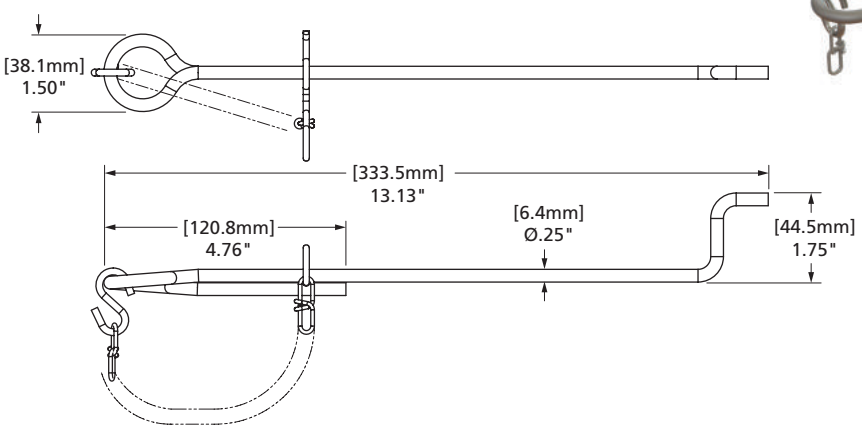



PART NUMBER	WEIGHT LBS [KG]
XA-3546	0.32 [0.16]

 Amendments and errors reserved. © SAF-HOLLAND, Inc.

SAF-HOLLAND Group

Secondary Lock

FW35, FW3500, FW33

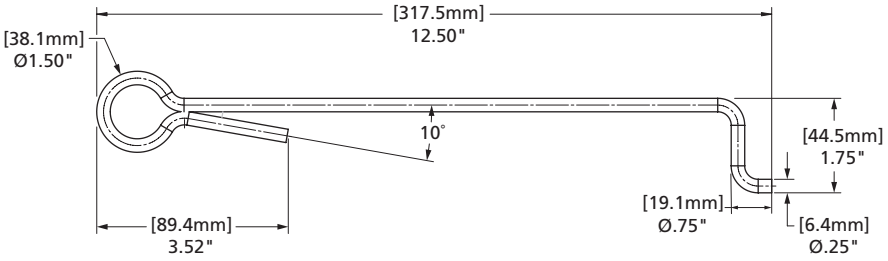



PART NUMBER	WEIGHT LBS [KG]
XA-3542-M	0.25 [0.11]

FW31 (E-Coat)

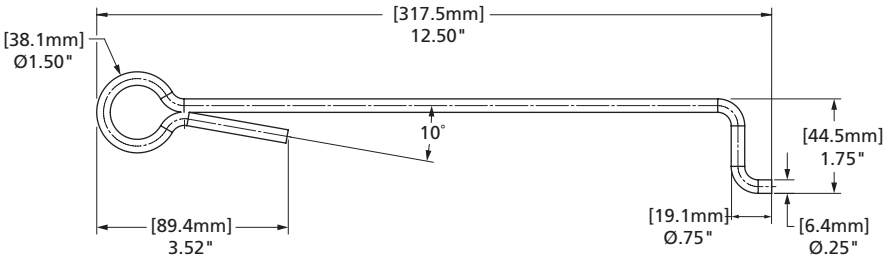



PART NUMBER	WEIGHT LBS [KG]
XA-10459	0.25 [0.11]

XL-FW10081PM-en-US Rev D 2016-03-01 Amendments and errors reserved. © SAF-HOLLAND, Inc.

Retrofit Drop Release

FW35, FW31 & FW33

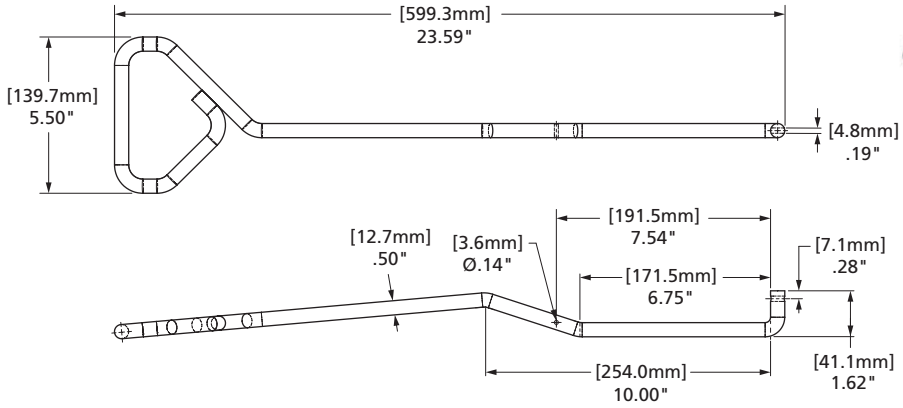



PART NUMBER	WEIGHT LBS [KG]
XA-08415-1	2.00 [0.91]

LH Drop Release

FW31



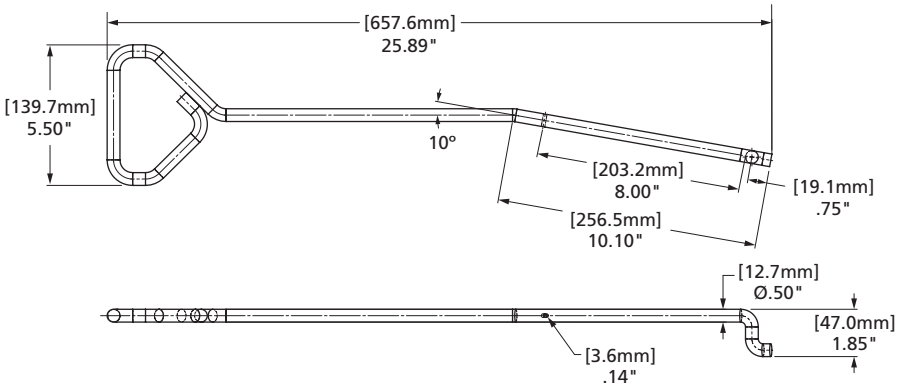

PART NUMBER	WEIGHT LBS [KG]
XA-10513	2.12 [0.96]

 Amendments and errors reserved. © SAF-HOLLAND, Inc.

SAF-HOLLAND Group

Convertor Dolly

FW35

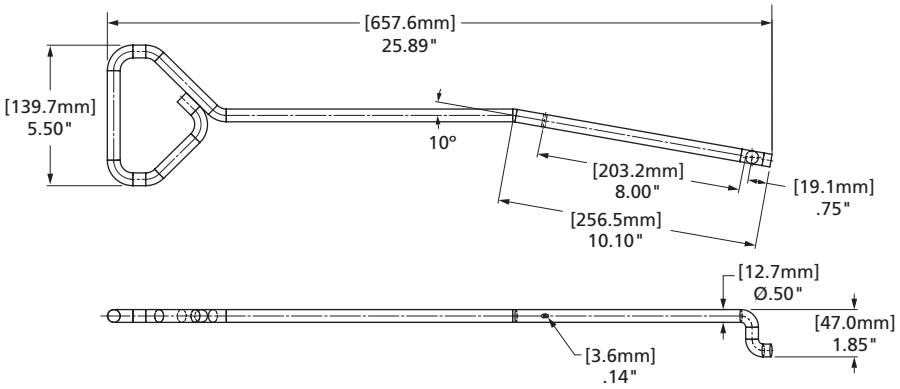



PART NUMBER	WEIGHT LBS [KG]
XA-09962	2.12 [0.96]

Air Cylinder Lockout

Simplex Yard Spotter

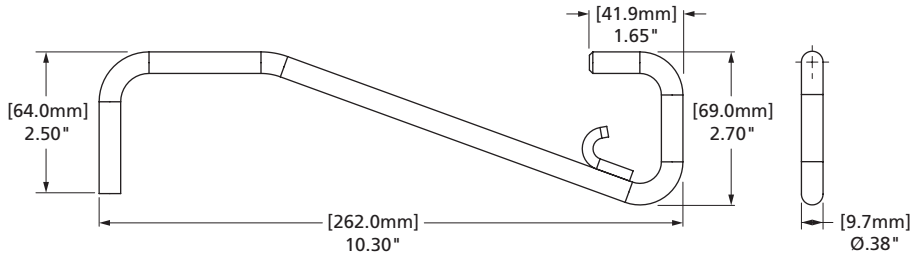



PART NUMBER	WEIGHT LBS [KG]
4100206	0.51 [0.23]

XL-FW10081PM-en-US Rev D 2016-03-01 Amendments and errors reserved. © SAF-HOLLAND, Inc.

THIS PAGE INTENTIONALLY LEFT BLANK

 Amendments and errors reserved. © SAF-HOLLAND, Inc.

SAF-HOLLAND Group

Bracket Pins

FW35, FW31, FW33, FW17, FW16, FWAL, FW8, FW83, FWS1& FWS2

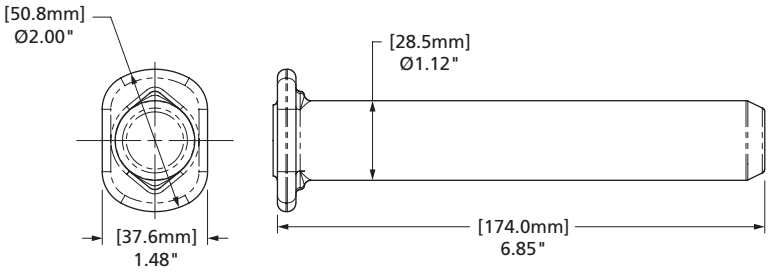

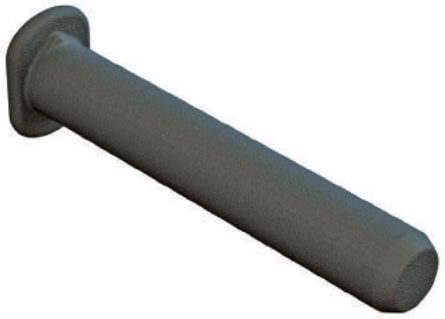

PART NUMBER	WEIGHT LBS [KG]
XE-06356-P	2.00 [0.91]

FW3500, FW2000 & FW35

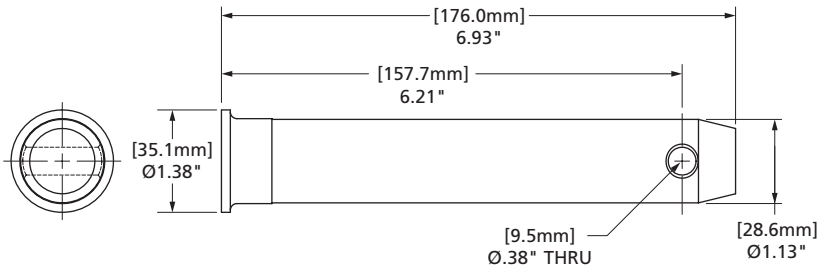



PART NUMBER	WEIGHT LBS [KG]
XA-2016	2.00 [0.91]

Simplex SE, Simplex Lite Straight, Simplex Lite Rotary Simplex II SE, Simplex II SE RH, Simplex II, Simplex II RH, Simplex RH, Simplex II Rotary & Simplex Yard Spotter

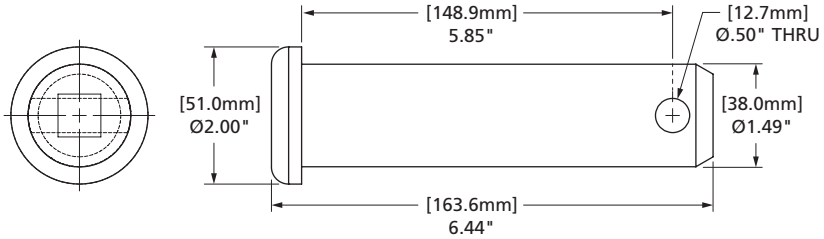



PART NUMBER	WEIGHT LBS [KG]
5400705	3.25 [1.47]

XL-FW10081PM-en-US Rev D 2016-03-01 Amendments and errors reserved. © SAF-HOLLAND, Inc.

Bracket Pins

FW0070 (After 11/86)

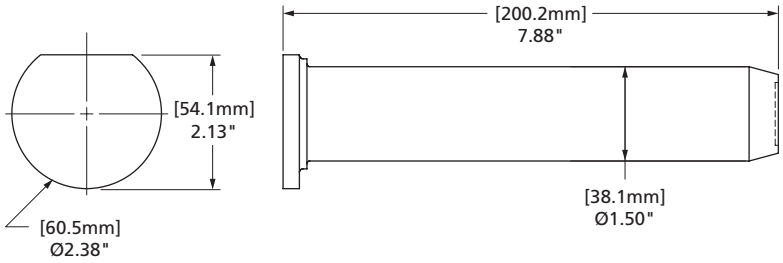



PART NUMBER	WEIGHT LBS [KG]
XE-02759	4.06 [1.84]

Castloc Rotary & Castloc II Straight

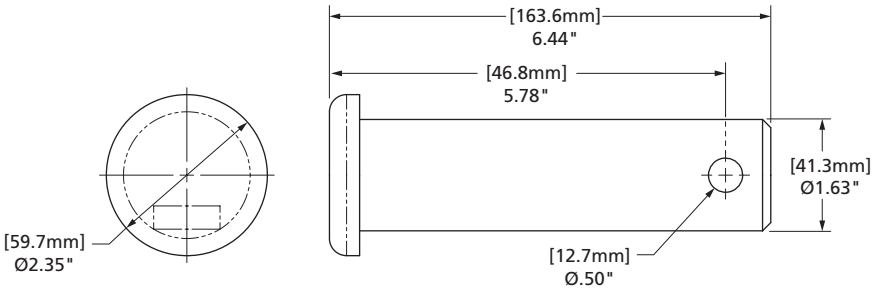



PART NUMBER	WEIGHT LBS [KG]
4100239	3.95 [1.79]

Simplex 400C

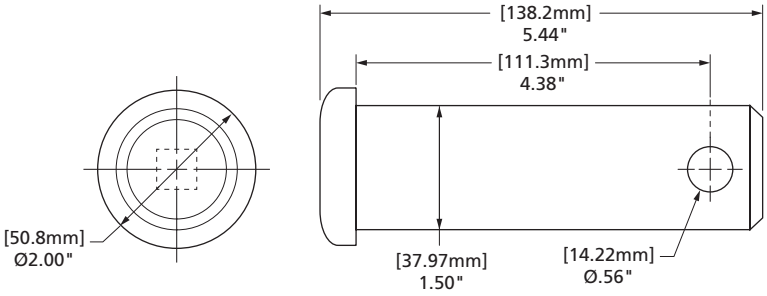



PART NUMBER	WEIGHT LBS [KG]
54300242	2.75 [1.25]

 Amendments and errors reserved. © SAF-HOLLAND, Inc.

SAF-HOLLAND Group

Pivot Shafts

FW2800/FW2900 & FW2870-03184

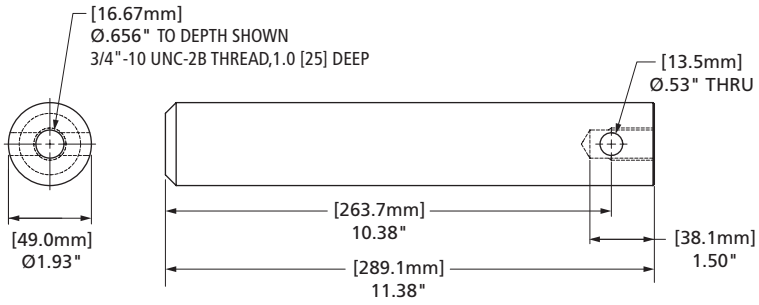



PART NUMBER	WEIGHT LBS [KG]
XA-2809	9.10 [4.13]

Trunnion Shafts

FW0100

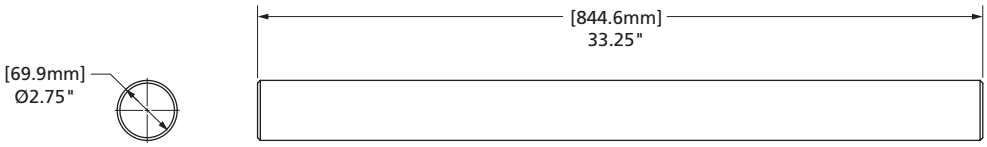

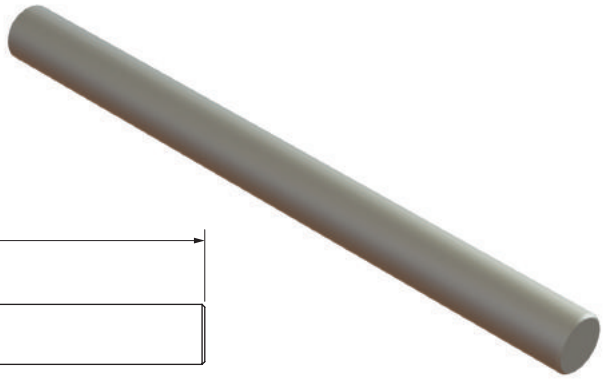

PART NUMBER	WEIGHT LBS [KG]
XA-FW-106	55.61 [25.22]

FW0165

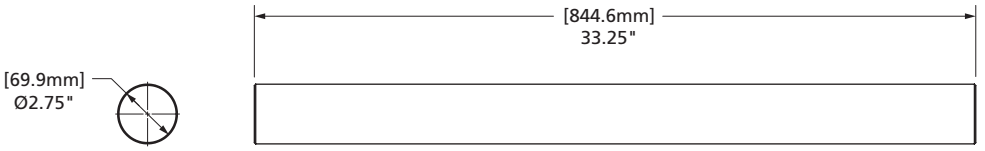

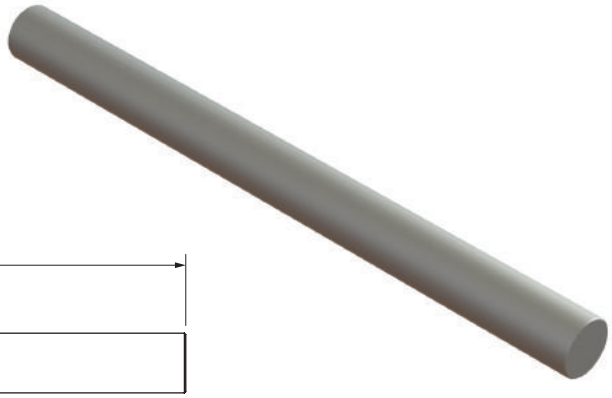

PART NUMBER	WEIGHT LBS [KG]
XA-0114	56.08 [25.44]

XL-FW10081PM-en-US Rev D 2016-03-01 Amendments and errors reserved. © SAF-HOLLAND, Inc.

Bracket Bolts

FW67/69 & FW35-03344



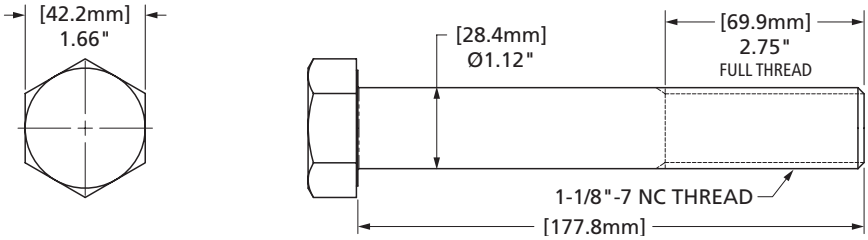

PART NUMBER	WEIGHT LBS [KG]
XB-BR-118-C-7	2.41 [1.09]

FW6000 & FW1900

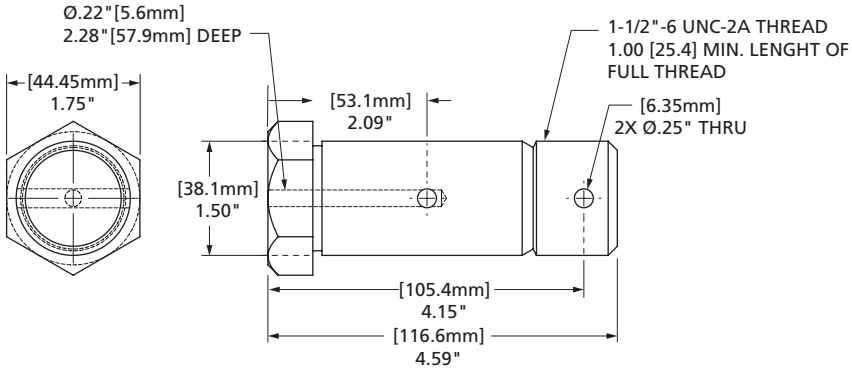



PART NUMBER	WEIGHT LBS [KG]
XA-6004	2.34 [1.06]

FW0070 (Prior to 11/86)

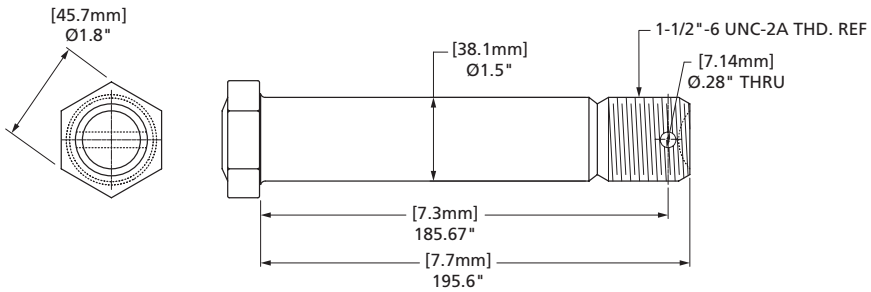

PART NUMBER	WEIGHT LBS [KG]
XA-2632	4.00 [1.81]

 Amendments and errors reserved. © SAF-HOLLAND, Inc.

SAF-HOLLAND Group

Lock Pins

FW35, FW33, FW67/FW69 & FW35-03344

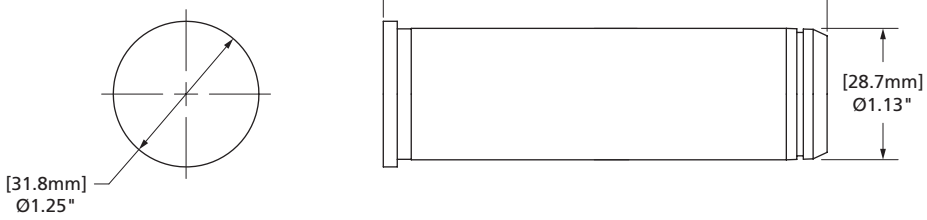



PART NUMBER	WEIGHT LBS [KG]
XA-07292-1	1.08 [0.49]

FW3500, FW2800/FW2900, FW1560-C & FW2870-03184

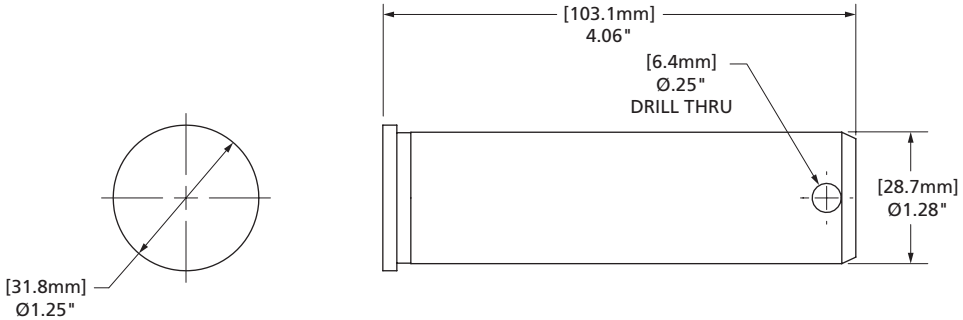



PART NUMBER	WEIGHT LBS [KG]
XA-1313	1.14 [0.52]

XL-FW10081PM-en-US Rev D 2016-03-01 Amendments and errors reserved. © SAF-HOLLAND, Inc.

Lock Pins

FW17 & FW16

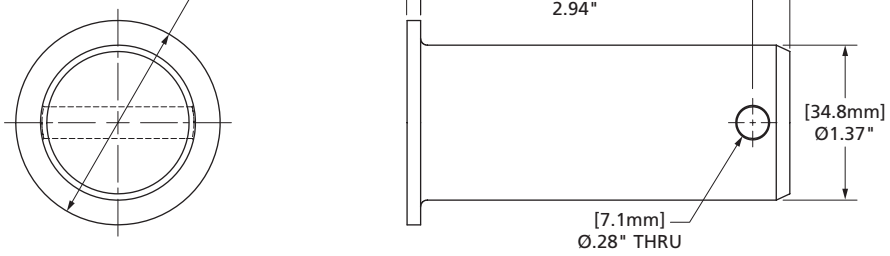



PART NUMBER	WEIGHT LBS [KG]
XA-06344-P	1.43 [0.65]

FWAL

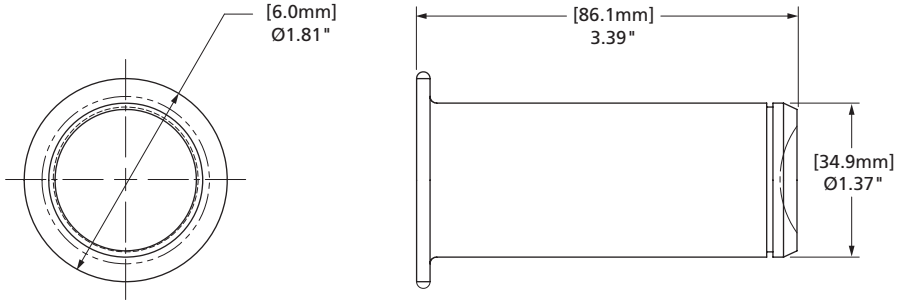



PART NUMBER	WEIGHT LBS [KG]
XA-06344-AL	1.45 [0.66]

 Amendments and errors reserved. © SAF-HOLLAND, Inc.

SAF-HOLLAND Group

Lock Pins

FW8, FW83 & FW17

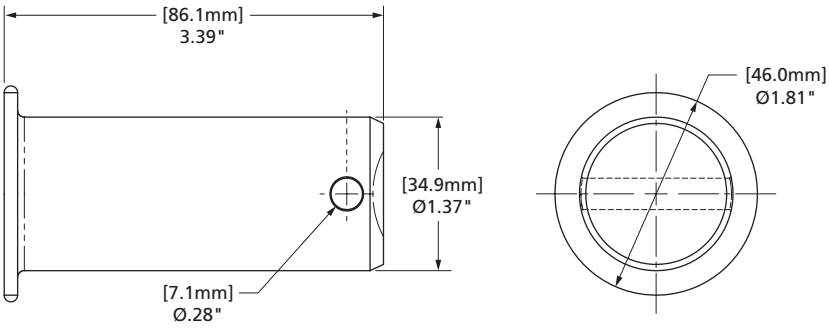



PART NUMBER	WEIGHT LBS [KG]
XA-06344	1.44 [0.65]

FW2000

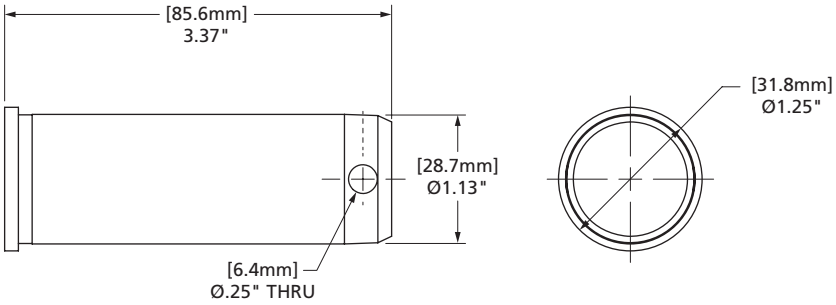



PART NUMBER	WEIGHT LBS [KG]
XA-1016	0.94 [0.43]

FW6000 & FW1900

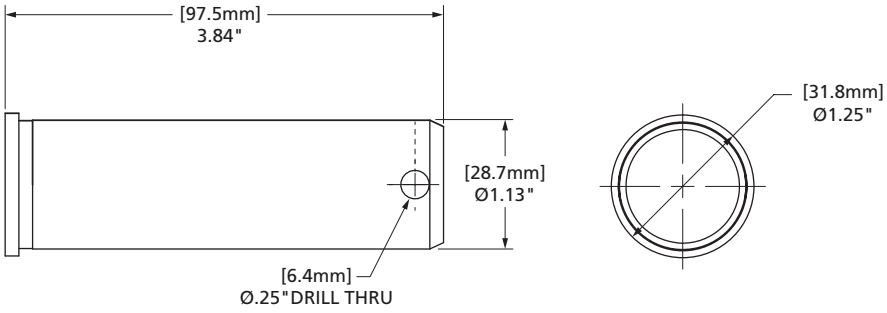



PART NUMBER	WEIGHT LBS [KG]
XA-1313-C	1.08 [0.49]

XL-FW10081PM-en-US Rev D 2016-03-01 Amendments and errors reserved. © SAF-HOLLAND, Inc.

Lock Pins W/Grease Fittings

FW35

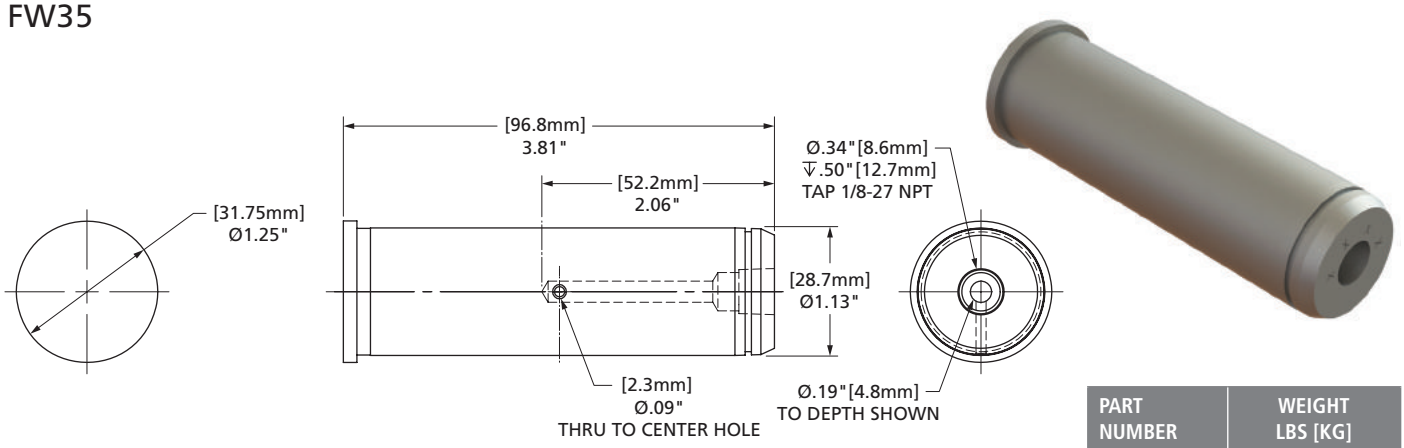

PART NUMBER	WEIGHT LBS [KG]
XA-07292-82	1.05 [0.48]

FW3500

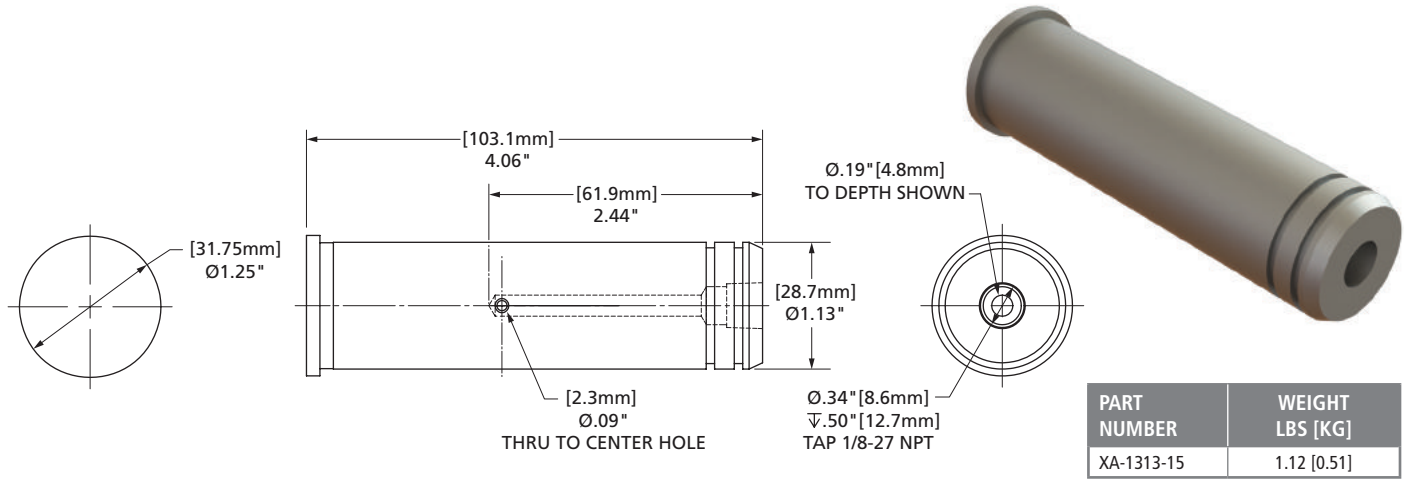

PART NUMBER	WEIGHT LBS [KG]
XA-1313-15	1.12 [0.51]

FW0100/FW0165

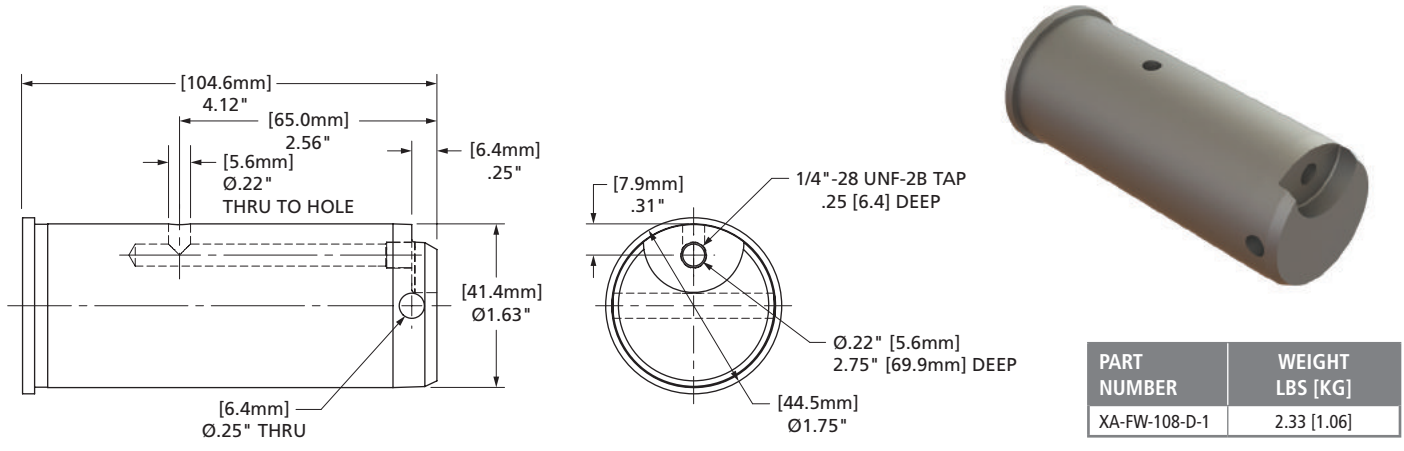

PART NUMBER	WEIGHT LBS [KG]
XA-FW-108-D-1	2.33 [1.06]

 Amendments and errors reserved. © SAF-HOLLAND, Inc.

Lock Pins W/Grease Fittings

FW2080 & FW0070

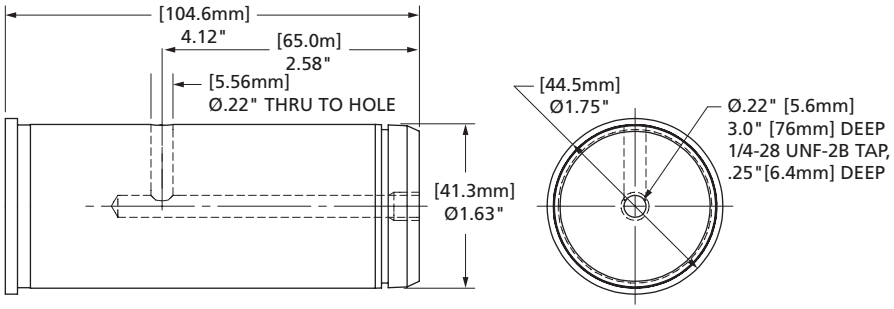



PART NUMBER	WEIGHT LBS [KG]
XA-FW-108-D-15	2.37 [1.08]

FW0070 & FW2080

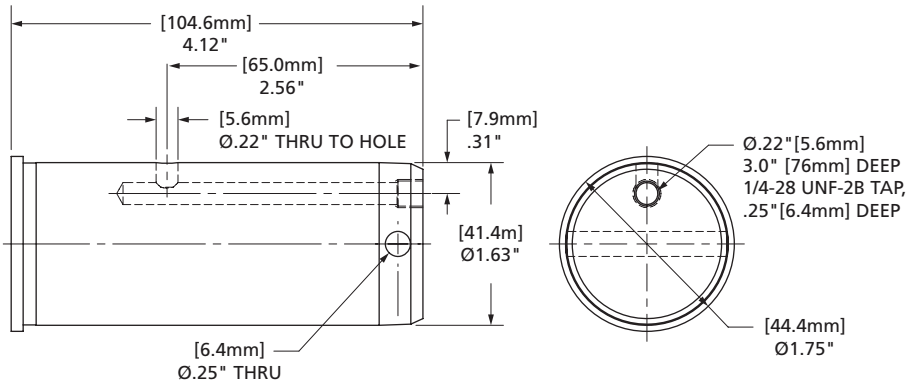



PART NUMBER	WEIGHT LBS [KG]
XA-FW-108-D	2.37 [1.08]

FW0070, FW0100/FW0165, FW2080 & FW1226 (Secondary Lock)

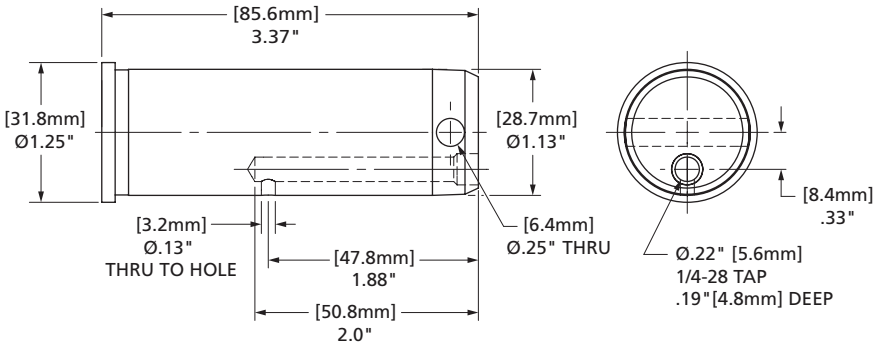



PART NUMBER	WEIGHT LBS [KG]
XA-1016-C	0.92 [0.42]

XL-FW10081PM-en-US Rev D 2016-03-01 Amendments and errors reserved. © SAF-HOLLAND, Inc.

Lock Pin – Lubricated

FW31

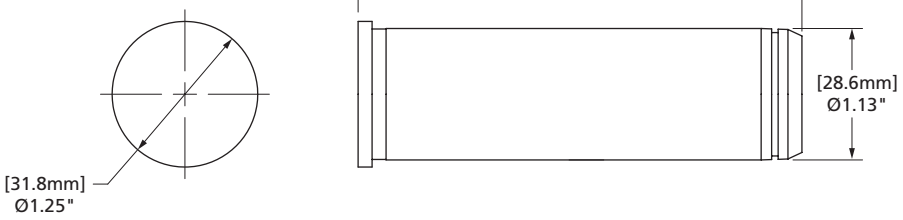



PART NUMBER	WEIGHT LBS [KG]
XA-10256	1.07 [0.49]

Clevis Pin

FW0001/FW0002

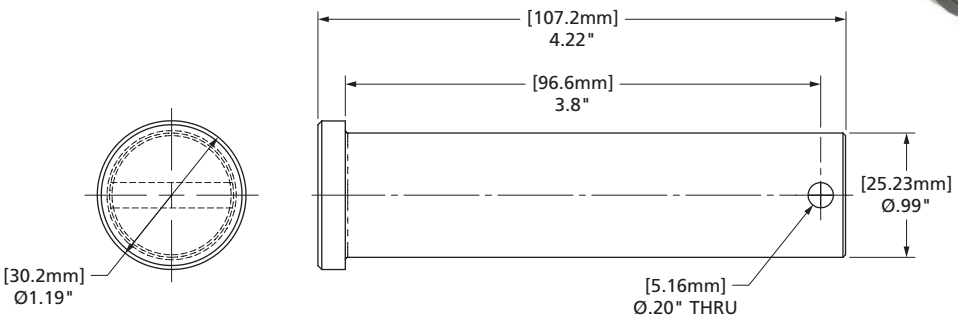



PART NUMBER	WEIGHT LBS [KG]
XB-CLP-052-25	0.94 [0.43]

 Amendments and errors reserved. © SAF-HOLLAND, Inc.

SAF-HOLLAND Group

Adjusting Pin

FW17 & FW16

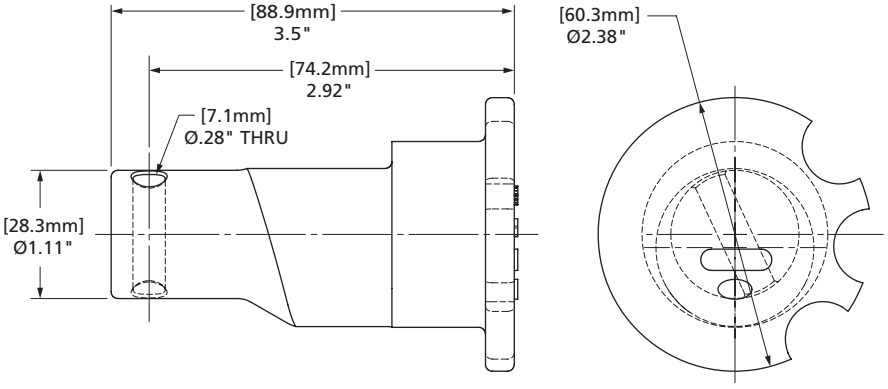



PART NUMBER	WEIGHT LBS [KG]
XA-10364-3-P	1.56 [0.71]

FWAL

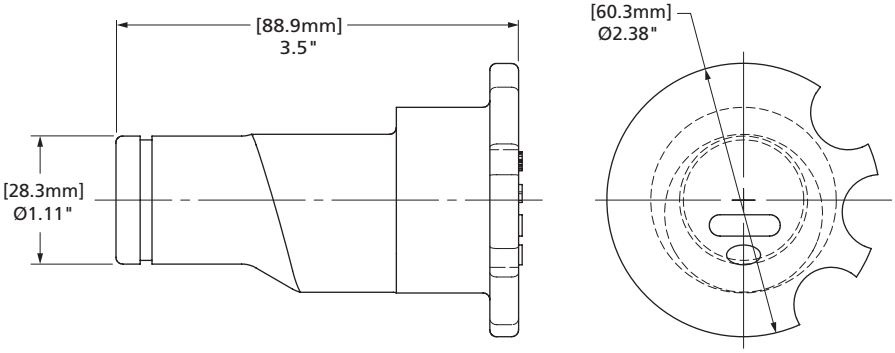



PART NUMBER	WEIGHT LBS [KG]
XA-10364-3-AL-P	1.58 [0.72[

XL-FW10081PM-en-US Rev D 2016-03-01 Amendments and errors reserved. © SAF-HOLLAND, Inc.

Eccentric Jaw Pin

FWS1 & FWS2

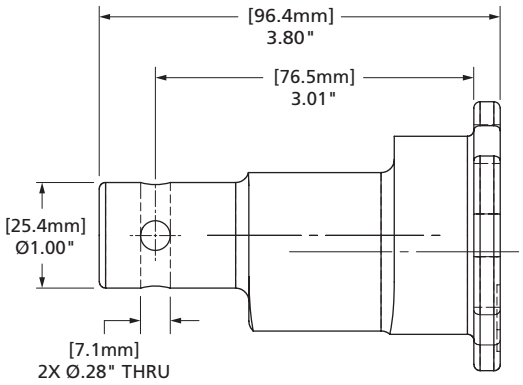

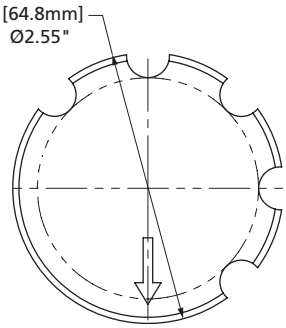



PART NUMBER	WEIGHT LBS [KG]
XA-10971	1.87 [0.85]

Simplex SE, Simplex II SE & SImplex II SE RH

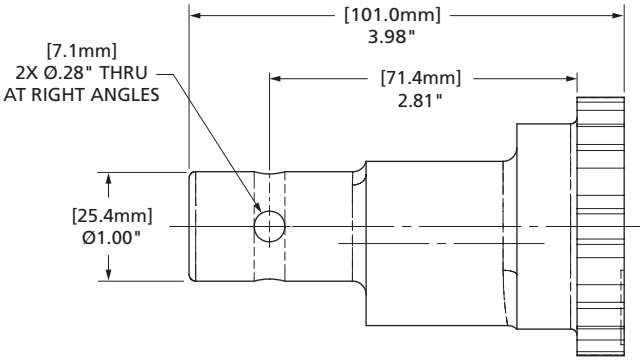

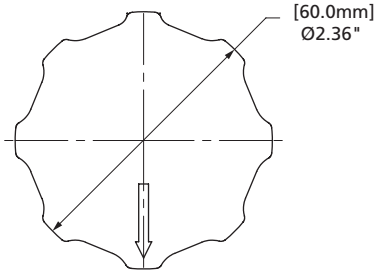



PART NUMBER	WEIGHT LBS [KG]
4109922-P	1.93 [0.88]

 Amendments and errors reserved. © SAF-HOLLAND, Inc.

ECCENTRIC JAW PIN

Simplex Lite Straight, Simplex Lite Rotary, Simplex II, Simplex II RH, Simplex RH, Castloc Rotary, Castloc II Straight & Simplex Yard

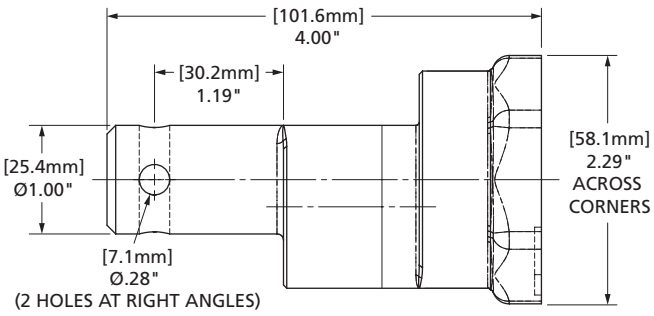

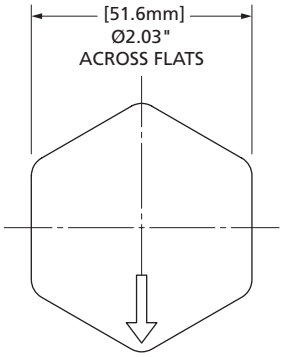



PART NUMBER	WEIGHT LBS [KG]
4109916	1.87 [0.85]

Simplex Lite Straight, Simplex Lite Rotary, Simplex II, Simplex II RH, Castloc Rotary, Castloc II Straight & Simplex Yard (Oversized)

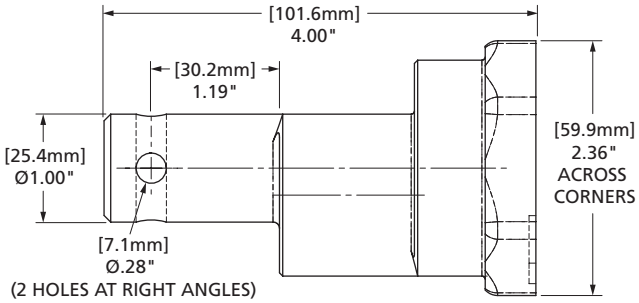

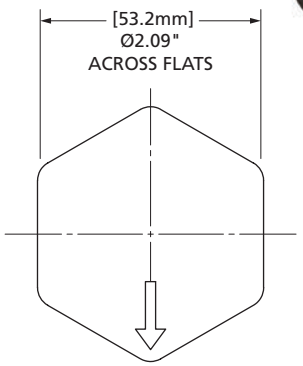



PART NUMBER	WEIGHT LBS [KG]
4109977	1.90 [0.86]

XL-FW10081PM-en-US Rev D 2016-03-01 Amendments and errors reserved. © SAF-HOLLAND, Inc.

THIS PAGE INTENTIONALLY LEFT BLANK

 Amendments and errors reserved. © SAF-HOLLAND, Inc.

PART NUMBER	PAGE NO.
22316	2-42
84261	1-241, 1-242, 1-243, 1-244, 1-255, 1-256, 1-257, 1-258, 1-269, 1-270, 1-271, 1-281, 1-282, 1-293, 1-294, 1-317, 1-318, 1-321, 1-324, 1-327, 1-328, 1-331, 1-332, 1-335, 1-336, 1-339, 1-340, 1-343, 1-344, 1-379, 1-380, 1-381, 2-42, 2-43, 2-45
84624	1-344
84787	1-269, 1-281, 1-293, 1-321, 1-327, 1-331, 1-335, 1-339, 1-343
85496	1-281, 1-293, 1-321, 2-45
85617	1-317, 1-318, 1-321, 1-324
400531	1-410
1200035	2-42
1200091	1-343, 1-344
1200101	1-241, 241, 1-243, 1-244, 1-255, 1-256, 1-257, 1-258, 1-269, 1-270, 1-271, 1-294, 1-317, 1-318, 1-323
1200616	1-343, 1-344
1200633	1-343, 1-344
1200706	1-241, 1-243, 1-244, 1-255, 1-257, 1-258, 1-269, 1-270, 1-271, 1-281, 1-282, 1-293, 1-294, 1-317, 1-318, 1-321, 1-324, 1-327, 1-328, 1-331, 1-332, 1-335, 1-336, 1-339, 1-340, 1-379, 1-380, 1-381
2100011	2-42
2100218	1-344
2100664	1-344
4000105	1-274, 1-286, 1-298, 1-322, 2-15
4000154	1-331
4000171	1-409, 1-410, 1-411
4000178	1-411
4000184	1-344
4000195	1-411
4000205	1-384
4000224	1-380
4000225	1-380

PART NUMBER	PAGE NO.
4000226	1-380
4000250	1-281, 1-282, 1-293, 1-294
4000263	1-335, 1-336, 1-339, 1-340
4000272	1-410
4000273	1-409, 1-410
4000501	1-410, 1-411
4000502	1-410, 1-411
4000503	1-409, 1-410
4000504	1-409, 1-410
4000505	1-409, 1-410
4000506	1-411
4000507	1-409, 1-410
4000508	1-410
4000509	1-410
4000510	1-410, 1-411
4000511	1-410
4000512	1-409
4000523	1-409, 1-410
4000528	1-409, 1-410
4000529	1-409, 1-410
4000530	1-411
4000531	1-409, 1-410
4000532	1-410, 1-411
4000539	1-410, 1-411
4000540	1-409, 1-410
4000570	1-410
4000572	1-410, 1-411
4000574	1-409, 1-410
4000576	1-410, 1-411
4000578	1-410
4000587	1-409, 1-410
4000588	1-409, 1-410
4000630	1-411
4000632	1-411
4000640	1-409, 1-410
4000641	1-409, 1-410
4000644	1-409
4000645	1-409
4000646	1-409
4000647	1-409
4000648	1-409

PART NUMBER	PAGE NO.
4000650	1-410, 1-411
4009114	1-274, 1-286, 1-298, 1-322, 2-15
4009297	1-274, 1-286, 1-298, 1-322, 2-15
4009723	1-275, 1-299
4009747	1-275, 1-299
4009821	1-275, 1-299
4009822	1-275, 1-299, 2-16
4009823	1-275, 1-299, 2-16
4009866	1-275, 1-299, 2-16
4009867	1-275, 1-299, 2-16
4009868	1-275, 1-299, 2-16
4009869	1-275, 1-299, 2-16
4100101	1-282, 1-294, 1-323
4100102	1-323
4100110	1-272, 1-284, 1-322
4100129	1-409
4100150	1-331, 1-332, 1-335, 1-336
4100152	1-331, 1-332, 1-335, 1-336
4100153	1-331, 1-332, 1-335, 1-336
4100154	1-332, 1-335, 1-336
4100155	1-281, 1-282, 1-293, 1-294, 1-331, 1-332, 1-335, 1-336
4100180	1-331, 1-332, 1-335, 1-336
4100193	1-379
4100200	1-343, 1-344
4100206	1-379, 1-381, 3-24
4100207	1-344
4100211	1-379, 1-381
4100212	1-379, 1-381
4100215	1-379, 1-381
4100219	1-409
4100239	1-335, 1-336, 1-339, 1-340, 3-27
4100258	1-411
4100269	1-410, 1-411
4100284	1-317, 1-318, 1-321, 1-324
4100294	1-269, 1-270, 1-271, 1-281, 1-282, 1-317, 1-318, 1-321, 1-324, 1-340

 Amendments and errors reserved. © SAF-HOLLAND, Inc.

PART NUMBER	PAGE NO.
4100296	1-318, 1-321, 1-324, 1-410, 1-411
4100304	1-409
4100328	1-269, 1-270, 1-271, 1-281, 1-283, 1-293, 1-294, 1-317, 1-318, 1-321, 1-323, 1-331, 1-332
4100329	1-269, 1-270, 1-271, 1-281, 1-283, 1-293, 1-294, 1-317, 1-318, 1-321, 1-323, 1-331, 1-332
4100332	1-317, 1-321, 1-324, 1-410, 1-411,
4100333	1-379, 1-381
4100339	1-269
4100342	1-321, 1-324, 1-339, 1-340, 1-410, 3-12
4100350	1-318, 1-321, 1-324, 1-327, 1-328, 1-410, 3-17
4100357	1-331, 1-332, 1-335, 1-336, 1-410, 1-411, 3-12
4100358	1-327, 1-328, 1-379, 1-380, 1-381
4100372	1-293, 1-294
4100373	1-241, 1-243, 1-244, 1-255, 1-257, 1-258, 1-269, 1-270, 1-271, 1-281, 1-282, 1-317, 1-318,
4100374	1-293, 1-294, 1-311
4100376	1-269
4100382	1-269, 1-270, 1-281, 1-282, 1-409, 1-410, 3-14
4100386	1-293, 1294, 1-410, 3-13
4100402	1-293, 1-294
4100409	1-343, 1-344
4100420	1-269, 1-270, 1-271, 1-281, 1-282, 1-317, 1-318, 1-409, 1-410, 3-13
4100421	1-293, 1-294
4100428	1-318, 1-321, 1-324, 1-327, 1-328
4100441	1-409, 3-17
4100448	1-409, 3-17
4100553	1-343

PART NUMBER	PAGE NO.
4100655	1-344
4100689	1-343
4100693	1-344
4100711	1-327, 1-328
4100712	1-321, 1-324, 1-327, 1-328, 1-339, 1-340, 1-380
4100767	1-339
4101010	1-344
4101013	1-344
4101250	1-269, 1-270, 1-281, 1-282, 1-317, 1-318, 1-321, 1-324, 1-339
4101394	1-343, 1-344
4101408	1-344
4101409	1-344
4101414	1-410
4101424	1-410
4101534	1-276, 1-288, 1-300, 2-12
4101536	1-276, 1-288, 1-300, 2-12
4101538	1-276, 1-288, 1-300, 2-12
4101539	1-276, 1-288, 1-300, 2-12
4101540	1-276, 1-288, 1-300, 2-12
4101630	1-276, 1-288, 1-300, 2-12
4101634	1-276, 1-288, 1-300, 2-12
4101636	1-276, 1-288, 1-300, 2-12
4101638	1-276, 1-288, 1-300, 2-12
4101639	1-276, 1-288, 1-300, 2-12
4101640	1-276, 1-288, 1-300, 2-12
4101730	1-276, 1-288, 1-300, 2-12
4101734	1-276, 1-288, 1-300, 2-12
4101736	1-276, 1-288, 1-300, 2-12
4101738	1-276, 1-288, 1-300, 2-12
4101739	1-276, 1-288, 1-300, 2-12

PART NUMBER	PAGE NO.
4101740	1-276, 1-288, 1-300, 2-12
4101830	1-276, 1-288, 1-300, 2-12
4102700	1-410
4102707	1-410
4102720	1-409
4102727	1-409
4102764	1-410
4102846	1-411
4109011	1-273, 1-285, 2-14
4109792	1-343, 1-344
4109793	1-343
4109795	1-344
4109808	1-317, 1-321, 1-324, 1-327, 1-328, 1-379, 1-380, 1-381
4109811	1-327, 1-328, 1-379, 1-380, 1-381
4109839	1-273, 1-285, 1-297, 1-383, 2-14
4109865	1-273, 1-285, 2-14
4109916	1-281, 1-282, 1-293, 1-294, 1-321, 1-323, 1-327, 1-328, 1-331, 1-332, 1-335, 1-336, 1-339, 1-340, 1-379, 1-380, 1-381, 3-38
4109931	1-241, 1-243, 1-244, 1-255, 1-257, 1-258, 1-269, 1-270, 2-271, 1-282, 1-293, 1-294, 1-317, 1-318, 1-321, 1-324, 1-331, 1-332, 1-335, 1-336, 1-339, 1-340
4109933	1-273, 1-285, 1-297, 1-383, 2-14
4109934	1-343, 1-344
4109935	1-335
4109940	1-317, 1-318, 1-321, 1-323, 1-327, 1-328, 1-379, 1-380, 1-381
4109944	1-343, 1-344, 1-411
4109945	1-343
4109948	1-343, 1-344
4109960	1-272, 1-284, 1-296, 1-322, 1-382, 2-13
4109961	1-272, 1-284, 1-322
4109976	1-272, 1-284, 1-296, 1-322, 1-382, 2-13

 Amendments and errors reserved. © SAF-HOLLAND, Inc.

PART NUMBER	PAGE NO.
4109977	1-282, 1-294, 1-321, 1-323, 1-327, 1-328, 1-331, 1-332, 1-335, 1-336, 1-339, 1-340, 1-380, 1-381, 3-38
4109982	1-272, 1-284, 1-296, 1-322, 1-382, 2-13
4109991	1-272, 1-284, 1-322
4300007	2-42
4300009	2-43
4300012	2-42
4300039	2-43
4300042	2-42, 2-43
4300043	2-42, 2-43
4300044	2-42, 2-43, 2-45
4300046	2-42, 2-43
4300088	2-43
4300145	2-42, 2-43
4300147	2-43
4300162	1-409
4300165	1-279, 1-291, 1-303, 1-409, 2-43
4300166	1-279, 1-291, 1-303, 1-409, 2-43
4300167	1-279, 1-291, 1-303, 1-409, 2-43
4300172	1-279, 1-291, 1-303, 1-409, 2-43
4300173	1-279, 1-291, 1-303, 1-409, 2-43
4300175	1-291, 1-303
4300176	1-291, 1-303
4300177	1-291, 1-303
4300178	1-291, 1-303
4300196	1-291, 1-303
4300204	1-279, 1-291, 1-303, 1-409, 2-43
4300205	1-279, 1-291, 1-303, 1-409, 2-43
4300206	1-279, 1-291, 1-303, 1-409, 2-43
4300209	1-409
4300214	2-45
4300223	2-45
4300226	1-409
4300227	1-409
4300228	1-409, 2-45

PART NUMBER	PAGE NO.
4300238	2-45
4300239	2-45
4300240	2-45
4300241	2-45
4300242	2-45
4300243	2-45
4300244	2-45
4300245	2-45
4300246	2-45
4300247	2-45
4300248	2-45
4300249	2-45
4300250	2-45
4300251	2-45
4300252	2-45
4300274	2-45
4300280	1-277, 2-45
4300281	1-277, 2-45
4300282	1-277, 2-45
4300283	1-277, 2-45
4300284	1-277, 2-45
4300298	1-277, 1-409
4300299	1-277, 1-409
4300300	1-277, 1-409
4300596	1-409
4300597	1-409
4300598	1-409
4300610	1-409
4300811	2-43
4300818	2-42
4300822	2-42
4302031	2-43
4302032	2-43
4302033	2-43
4302034	2-43
4302036	2-43
4302041	2-43
4302042	2-43
4302043	2-43
4302044	2-43
4302046	2-43
4302051	2-43
4302052	2-43
4302053	2-43

PART NUMBER	PAGE NO.
4302054	2-43
4302055	2-43
4302055	2-43
4302056	2-43
4302057	2-43
4302058	2-43
4302059	2-43
4302060	2-43
4302101	2-43
4302102	2-43
4302103	2-43
4302104	2-43
4302106	2-43
4302111	2-43
4302112	2-43
4302113	2-43
4302114	2-43
4302116	2-43
4302121	2-43
4302122	2-43
4302123	2-43
4302124	2-43
4302126	2-43
5400211	1-343, 1-344
5400219	1-379, 1-380, 1-381
5400242	1-343, 1-344
5400523	1-343, 1-344
5400705	1-269, 1-270, 1-281, 1-283, 1-293, 1-294, 1-317, 1-318, 1-321, 1-323, 1-327, 1-328, 1-331, 1-332, 1-379, 1-380, 1-381, 3-26
5400707	1-270, 1-271, 1-318
5400711	1-269, 1-270, 1-271, 1-281, 1-282, 1-317, 1-318, 1-321, 1-324, 1-339, 1-340
5400766	1-321, 1-324, 1-327, 1-328, 1-339, 1-340, 1-379, 1-380, 1-381
7102700	1-410, 1-411
7502700	1-410
7602700	1-411
9502700	1-410
9502720	1-409
9900095	1-343, 1-344

 Amendments and errors reserved. © SAF-HOLLAND, Inc.

PART NUMBER	PAGE NO.
9900096	1-343, 1-344
9900097	1-344
9900100	1-343, 1-344
9900101	1-343, 1-344
9900113	1-331, 1-332, 1-335, 1-336
9900139	1-293, 1-294, 1-318, 1-321, 1-324
9900145	2-42, 2-43, 2-45
9900146	2-42, 2-43, 2-45
9900169	1-269, 1-270, 1-271, 1-281, 1-283, 1-293, 1-294, 1-318, 1-321, 1-323, 1-327, 1-328, 1-331, 1-332, 1-379, 1-380, 1-381
9900170	1-117, 1-118, 1-120, 1-241, 1-242, 1-243, 1-244, 1-255, 1-256, 1-257, 1-258, 1-269, 1-270, 1-271, 1-281, 1-282, 1-293, 1-294, 1-317, 1-318, 1-321, 1-323, 1-327, 1-328, 1-331, 1-332, 1-335, 1-336, 1-339, 1-340, 1-379, 1-380, 1-381, 2-42, 2-43
9900172	2-42
9900174	1-269, 1-270, 1-271, 1-281, 1-282, 1-293, 1-294, 1-318, 1-321, 1-324
9900175	1-335, 1-336, 1-339, 1-340
9900177	1-379, 1-380, 1-381
9900179	1-318, 1-321, 1-324
9900181	1-241, 1-242, 1-243, 1-255, 1-256, 1-257, 1-269, 1-270, 1-271, 1-281, 1-282, 1-317, 1-318, 1-321, 1-324, 1-339, 1-340
9900182	1-269, 1-270, 1-271, 1-281, 1-282, 1-293, 1-294
9900183	1-293, 1-294
9900184	1-281
9900846	1-339
9900847	1-344

PART NUMBER	PAGE NO.
9901263	2-42
10402700	1-410
10402707	1-410
10402720	1-409
10402727	1-409
10469618	1-287
10469633	1-287
10469666	1-287
10469667	1-287
10469668	1-287
10469686	1-287
10469687	1-287
10469688	1-287
10469689	1-287
10602700	1-410
10602720	1-409
10802700	1-410
11002700	1-410
11202700	1-409
11202720	1-409
54300242	3-27
662130114	1-136
4109922-P	1-269, 1-270, 1-271, 1-317, 1-318, 3-37
7202700A	1-411
7602700A	1-411
A7202700	1-411
A7602700	1-411
B1200101	1-409
B1200706	1-409, 1-410, 1-411
B4000263	1-411
B4100150	1-410, 1-411
B4100294	1-409, 1-410, 1-411
B4100296	1-410, 1-411
B4100328	1-409, 1-410
B4100329	1-409, 1-410
B4100332	1-410, 1-411
B4100339	1-410, 1-411
B4100342	1-410
B4100350	1-410

PART NUMBER	PAGE NO.
B4100357	1-410, 1-411
B4100358	1-409, 1-410
B4100374	1-410
B4100376	1-409, 1-410
B4100382	1-409, 1-410
B4100386	1-410
B4100420	1-409, 1-410
B4100428	1-409, 1-410
B4100441	1-409
B4100655	1-409, 1-411
B4101250	1-409, 1-410, 1-411
B4109811	1-409, 1-410
B4109948	1-411
BFW0101	1-389
BFW0104-35	1-389
XA-0756	1-389
XA-07732	1-389
XA-07732	1-389, 1-391, 3-19
XA-07732	1-389, 1-391
XA-07732	1-314
XA-07732	1-314
XA-07732	1-314
XA-07732	1-408
XA-07732	1-408
XA-07732	1-408
RK-05329	1-408
RK-06535	1-352
RK-06973-1	1-408
RK-08415-1	1-408
RK-10495-AL-P	1-408
RK-10605	1-408
RK-10689-1	1-22, 1-23, 1-34, 1-80, 1-81, 1-89, 1-104, 1-105, 1-113, 1-126, 1-127, 1-131, 1-142, 1-143, 1-145, 1-154, 1-155, 1-158, 1-173, 1-175, 1-185, 1-206, 1-207, 1-213, 1-249, 1-250, 1-252, 1-263, 1-264, 1-266
RK-10689-2	1-22, 1-23, 1-34, 1-80, 1-81, 1-89, 1-104, 1-105, 1-113, 1-126, 1-127, 1-131, 1-142, 1-143, 1-145, 1-154, 1-155, 1-158, 1-173, 1-175, 1-185, 1-206, 1-207, 1-213, 1-249, 1-250, 1-252, 1-263, 1-264, 1-266

XL-FW10081PM-en-US Rev C 2013-10-1 Amendments and errors reserved. © SAF-HOLLAND, Inc.

PART NUMBER	PAGE NO.
RK-10689-3	1-22, 1-23, 1-34, 1-80, 1-81, 1-89, 1-104, 1-105, 1-113, 1-126, 1-127, 1-131, 1-142, 1-143, 1-145, 1-154, 1-155, 1-158, 1-173, 1-175, 1-185, 1-206, 1-207, 1-213, 1-249, 1-250, 1-252, 1-263, 1-264, 1-266
RK-1117-1	1-408
RK-1117-1-L	1-408
RK-11922	1-398, 1-399
RK-11927	1-398
RK-161-11078	1-408
RK-161-11493	1-408
RK-161-A	1-408
RK-1707-2	1-401
RK-1707-6	1-408
RK-1707-M	1-408
RK-171-11078	1-408
RK-171-11079	1-408
RK-17-A-L	1-408
RK-201-A3	1-408
RK-201-A3-L	1-408
RK-2774	1-360, 1-361
RK-311-10344	1-408
RK-311-A	1-408
RK-311-A-L	1-408
RK-311-LK	1-408
RK-351-03505	1-408
RK-351-07296	1-408
RK-351-A	1-408
RK-351-A-L	1-408
RK-351-UB	1-408
RK-4109939	1-408
RK-6003	1-395
RK-62000	1-408
RK-62001	1-408
RK-62004	1-408
RK-63500	1-408
RK-63501	1-408
RK-63502	1-408
RK-63503	1-408
RK-63504	1-408
RK-65005	1-408
RK-65006	1-408

PART NUMBER	PAGE NO.
RK-65012	1-408
RK-65013	1-408
RK-65014	1-408
RK-65015	1-408
RK-65021	1-408
RK-65024	1-408
RK-65024-1	1-408
RK-AL-11078	1-408
RK-AL-A-L	1-408
RK-FWS-A-L	1-408
RK-V600-G	2-11
RK-V700-G	2-11
RK-V800-G	2-11
RK-V900-G	2-11
RK-W600-G	1-32, 1-60, 1-88, 1-112, 1-130, 1-144, 1-157, 1-184, 1-212, 1-232, 1-251, 1-265, 2-9
RK-W700-G	1-32, 1-60, 1-88, 1-112, 1-130, 1-144, 1-157, 1-184, 1-212, 1-232, 1-251, 1-265, 2-9
RK-W800-G	1-32, 1-60, 1-88, 1-112, 1-130, 1-144, 1-157, 1-184, 1-212, 1-232, 1-251, 1-265, 2-9
RK-W900-G	1-32, 1-60, 1-88, 1-112, 1-130, 1-144, 1-157, 1-184, 1-212, 1-232, 1-251, 1-265, 2-9
RK-X600	1-21, 1-49, 1-79, 1-103, 1-125, 1-141, 1-153, 1-174, 1-205, 1-222, 1-248, 1-262, 2-7
RK-X700	1-21, 1-49, 1-79, 1-103, 1-125, 1-141, 1-153, 1-174, 1-205, 1-222, 1-248, 1-262, 2-7
RK-X800	1-21, 1-49, 1-79, 1-103, 1-125, 1-141, 1-153, 1-174, 1-205, 1-222, 1-248, 1-262, 2-7
RK-X900	1-21, 1-49, 1-79, 1-103, 1-125, 1-141, 1-153, 1-174, 1-205, 1-222, 1-248, 1-262, 2-7
RK-Y600	1-20, 1-48, 1-78, 1-102, 1-124, 1-140, 1-152, 1-172, 1-204, 1-221, 1-247, 1-261, 2-3
RK-Y700	1-20, 1-48, 1-78, 1-102, 1-124, 1-140, 1-152, 1-172, 1-204, 1-221, 1-247, 1-261, 2-3

PART NUMBER	PAGE NO.
RK-Y800	1-20, 1-48, 1-78, 1-102, 1-124, 1-140, 1-152, 1-172, 1-204, 1-221, 1-247, 1-261, 2-3
RK-Y900	1-20, 1-48, 1-78, 1-102, 1-124, 1-140, 1-152, 1-172, 1-204, 1-221, 1-247, 1-261, 2-3
RK-Z600	1-20, 1-48, 1-78, 1-102, 1-124, 1-140, 1-152, 1-172, 1-204, 1-221, 1-247, 1-261, 2-5
RK-Z700	1-20, 1-48, 1-78, 1-102, 1-124, 1-140, 1-152, 1-172, 1-204, 1-221, 1-247, 1-261, 2-5
RK-Z800	1-20, 1-48, 1-78, 1-102, 1-124, 1-140, 1-152, 1-172, 1-204, 1-221, 1-247, 1-261, 2-5
RK-Z900	1-20, 1-48, 1-78, 1-102, 1-124, 1-140, 1-152, 1-172, 1-204, 1-221, 1-247, 1-261, 2-5
TF-0110	1-311, 1-355
TF-TLN-1500	1-311, 1-355
TF-TLN-5001	1-311, 1-355
XA-0014	2-55, 2-57, 2-59, 2-60, 2-63, 2-65
XA-0024	2-55, 2-57, 2-59, 2-60, 2-63, 2-65
XA-0093	1-404, 1-407, 3-18
XA-0114	1-311, 3-28
XA-0115	1-311
XA-0115-1	1-311
XA-01209	1-393, 1-397
XA-01241	1-45, 1-46
XA-01242	1-45, 1-46
XA-0128-L	2-55, 2-57, 2-59, 2-60, 2-63, 2-65
XA-0128-R	2-55, 2-57, 2-59, 2-60, 2-63, 2-65
XA-01427	2-55, 2-57, 2-59, 2-60, 2-63, 2-65
XA-01429	2-55, 2-57, 2-59, 2-60, 2-63, 2-65
XA-01586	2-30, 2-34, 2-38, 2-46, 2-48, 2-50, 2-63, 2-65
XA-01601	1-349
XA-01613	1-393, 1-395, 1-397, 1-401
XA-0194	1-349

 Amendments and errors reserved. © SAF-HOLLAND, Inc.

PART NUMBER	PAGE NO.
XA-0195	1-349
XA-01997	2-55, 2-57, 2-59, 2-60, 2-63, 2-65
XA-01998	2-55, 2-57, 2-59, 2-60, 2-63, 2-65
XA-02039	1-404, 1-407
XA-02136-G1	1-39, 1-67, 1-239
XA-02136-G2	1-39, 1-67, 1-239
XA-02136-G3A	1-39, 1-67, 1-239
XA-02136-G4	1-39, 1-67, 1-239
XA-02136-G5	1-39, 1-67, 1-239
XA-02136-G6	1-39, 1-67, 1-239
XA-0268	1-371, 1-373
XA-02748-1	2-30, 2-34, 2-38, 2-46, 2-48, 2-50, 2-63, 2-65
XA-0284-1	1-31, 1-59, 1-87, 1-111, 1-183, 1-231, 2-63
XA-0284-2	1-31, 1-59, 1-87, 1-111, 1-183, 1-231, 2-63
XA-0284-3A	1-31, 1-59, 1-87, 1-111, 1-183, 1-231, 2-63
XA-0284-4	1-31, 1-59, 1-87, 1-111, 1-183, 1-231, 2-63
XA-0284-5	1-31, 1-59, 1-87, 1-111, 1-183, 1-231, 2-63
XA-0284-6	1-31, 1-59, 1-87, 1-111, 1-183, 1-231, 2-63
XA-03082	2-30, 2-34, 2-38, 2-46, 2-48, 2-50, 2-63, 2-65
XA-03124-3	1-135, 1-137
XA-0313-2	2-19, 2-21
XA-03189-1	1-387
XA-03193-1	1-387
XA-03423	1-371, 1-373
XA-03711	1-305
XA-03715	1-305, 1-307, 3-9
XA-0372-A	2-30, 2-34, 2-38, 2-46, 2-48, 2-50, 2-63, 2-65
XA-03748	2-30, 2-34, 2-38, 2-46, 2-48, 2-50, 2-63, 2-65
XA-05172	1-349
XA-05768	1-311, 1-355
XA-05768-1	1-305
XA-05952	1-355
XA-05952-A	1-355
XA-06110	1-355
XA-06245	1-360
XA-06288	1-360

PART NUMBER	PAGE NO.
XA-06344	1-161, 1-163, 1-164, 1-165, 1-166, 1-167, 1-168, 1-169, 1-193, 1-195, 1-196, 1-197, 1-198, 1-199, 1-200, 1-201, 3-32
XA-06344-AL	1-147, 1-148, 1-150, 3-31
XA-06344-P	1-117, 1-118, 1-120, 1-135, 1-136, 1-137, 3-31
XA-06345	1-161, 1-165, 1-166, 1-193, 1-197, 1-198, 3-20
XA-06349	1-161, 1-165, 1-166, 1-193, 1-197, 1-198
XA-06354	1-12, 1-72, 1-96
XA-06379	1-404, 1-407
XA-06565-2	1-135, 1-137
XA-06565-35	1-12, 1-72, 1-96, 1-352
XA-0708-A	2-30, 2-34, 2-38
XA-0709-A	2-30, 2-34, 2-38
XA-0712	2-30, 2-34, 2-38
XA-07150-L	1-13
XA-07150-L-P	1-9, 1-14, 1-16, 1-17, 1-93, 1-97, 1-98
XA-07150-R	1-13
XA-07150-R-P	1-9, 1-14, 1-16, 1-93, 1-97, 1-98
XA-07151-1	1-9, 1-11, 1-13, 1-14, 1-16, 1-93, 1-95, 1-97, 1-98, 3-7
XA-07292-1	1-9, 1-10, 1-13, 1-14, 1-15, 1-16, 1-17, 1-93, 1-94, 1-97, 1-98, 1-99, 1-347, 1-350, 1-351, 1-352, 1-371, 1-373, 3-30
XA-07292-82	1-10, 3-33
XA-07295	1-10, 1-13, 1-15, 1-347, 1-351, 1-371, 1-373
XA-07295-P	1-9, 1-14, 1-16, 1-17, 1-93, 1-94, 1-97, 1-98, 1-99
XA-07295-THK	1-41, 1-43, 1-44, 1-45, 1-46, 1-359, 1-368, 1-375, 1-376, 1-393, 1-395, 1-397, 1-401
XA-07296	1-10, 1-13, 1-15
XA-07296-P	1-9, 1-14, 1-16, 1-17, 1-93, 1-94, 1-97, 1-98, 1-99

PART NUMBER	PAGE NO.
XA-0750-1	1-26, 1-27, 1-54, 1-55, 1-84, 1-85, 1-108, 1-109, 1-178, 1-179, 1-210, 1-211, 1-226, 1-227, 2-35, 2-36
XA-0750-2	1-26, 1-27, 1-54, 1-55, 1-84, 1-85, 1-108, 1-109, 1-178, 1-179, 1-210, 1-211, 1-226, 1-227, 2-35, 2-36
XA-0750-3	1-26, 1-27, 1-54, 1-55, 1-84, 1-85, 1-108, 1-109, 1-178, 1-179, 1-210, 1-211, 1-226, 1-227, 2-35, 2-36
XA-0750-4	1-26, 1-27, 1-54, 1-55, 1-84, 1-85, 1-108, 1-109, 1-178, 1-179, 1-210, 1-211, 1-226, 1-227, 2-35, 2-36
XA-0750-5	1-26, 1-27, 1-54, 1-55, 1-84, 1-85, 1-108, 1-109, 1-178, 1-179, 1-210, 1-211, 1-226, 1-227, 2-35, 2-36
XA-0750-6	1-26, 1-27, 1-54, 1-55, 1-84, 1-85, 1-108, 1-109, 1-178, 1-179, 1-210, 1-211, 1-226, 1-227, 2-35, 2-36
XA-0750-7	1-26, 1-54, 1-84, 1-108, 1-178, 1-226, 2-35
XA-0751-1	1-26, 1-27, 1-54, 1-55, 1-84, 1-85, 1-108, 1-109, 1-129, 1-178, 1-179, 1-210, 1-211, 1-226, 1-227, 2-35, 2-36
XA-0751-2	1-26, 1-27, 1-29, 1-54, 1-55, 1-57, 1-84, 1-85, 1-108, 1-109, 1-129, 1-178, 1-179, 1-181, 1-210, 1-211, 1-226, 1-227, 1-229, 2-35, 2-36
XA-0751-3	1-29, 1-57, 1-181, 1-229
XA-0751-3A	1-26, 1-27, 1-54, 1-55, 1-84, 1-85, 1-108, 1-109, 1-129, 1-178, 1-179, 1-210, 1-211, 1-226, 1-227, 2-35, 2-36
XA-0751-4	1-26, 1-27, 1-29, 1-54, 1-55, 1-57, 1-84, 1-85, 1-108, 1-109, 1-129, 1-178, 1-179, 1-181,

XL-FW10081PM-en-US Rev C 2013-10-1 Amendments and errors reserved. © SAF-HOLLAND, Inc.

PART NUMBER	PAGE NO.
XA-0751-4	1-210, 1-211, 1-226, 1-227, 1-229, 2-35, 2-36
XA-0751-5	1-26, 1-27, 1-29, 1-54, 1-55, 1-57, 1-84, 1-85, 1-108, 1-109, 1-178, 1-179, 1-181, 1-210, 1-211, 1-226, 1-227, 1-229, 2-35, 2-36
XA-0751-6	1-26, 1-27, 1-29, 1-54, 1-55, 1-57, 1-84, 1-85, 1-108, 1-109, 1-178, 1-179, 1-181, 1-210, 1-211, 1-226, 1-227, 1-229, 2-35, 2-36
XA-0752-G1-__	2-39, 2-40
XA-0752-G2	2-51
XA-0752-G2-__	1-35, 1-37, 1-62, 1-65, 1-91, 1-115, 1-186, 1-187, 1-189, 1-234, 1-237, 2-39, 2-40
XA-0752-G3	2-51
XA-0752-G3-__	1-35, 1-37, 1-62, 1-65, 1-91, 1-115, 1-186, 1-187, 1-189, 1-234, 1-237, 2-39, 2-40
XA-0752-G4	2-51
XA-0752-G4-__	1-35, 1-37, 1-62, 1-65, 1-91, 1-115, 1-186, 1-187, 1-189, 1-234, 1-237, 2-39, 2-40
XA-0752-G5	2-51
XA-0752-G5-__	1-35, 1-37, 1-62, 1-65, 1-91, 1-115, 1-186, 1-187, 1-189, 1-234, 1-237, 2-39, 2-40
XA-0752-G6	2-51
XA-0752-G6-__	1-35, 1-37, 1-62, 1-65, 1-91, 1-115, 1-186, 1-187, 1-189, 1-234, 1-237, 2-39, 2-40
XA-0752-G7	2-51
XA-0752-G7-__	1-37, 1-65, 1-91, 1-115, 1-189, 1-237, 2-39, 2-40
XA-0753-G1-__	1-36, 1-37, 1-64, 1-65, 1-90, 1-91, 1-114, 1-115, 1-188, 1-189, 1-236, 1-237, 2-39, 2-40
XA-0753-G2-__	1-36, 1-37, 1-64, 1-65, 1-90, 1-91, 1-114, 1-115, 1-188, 1-189, 1-236, 1-237, 2-39, 2-40

PART NUMBER	PAGE NO.
XA-0753-G3-__	1-36, 1-37, 1-64, 1-65, 1-90, 1-91, 1-114, 1-115, 1-188, 1-189, 1-236, 1-237, 2-39, 2-40
XA-0753-G3A-__	2-39, 2-40
XA-0753-G4-__	1-36, 1-37, 1-64, 1-65, 1-90, 1-91, 1-114, 1-115, 1-188, 1-189, 1-236, 1-237, 2-39, 2-40
XA-0753-G5-__	1-36, 1-37, 1-64, 1-65, 1-90, 1-91, 1-114, 1-115, 1-188, 1-189, 1-236, 1-237, 2-39, 2-40
XA-0753-G6-__	1-36, 1-37, 1-64, 1-65, 1-90, 1-91, 1-114, 1-115, 1-188, 1-189, 1-236, 1-237, 2-39, 2-40
XA-0756	2-30, 2-34, 2-38, 2-46, 2-48, 2-50
XA-07732	1-404, 1-407, 3-13
XA-07766-1	1-9, 1-11, 1-15, 1-93, 1-95, 1-96, 1-99, 3-4
XA-07766-1-P	1-12
XA-0781	1-355
XA-0784	1-355
XA-0786	1-355
XA-07871-1	1-24, 1-25, 1-52, 1-53, 1-82, 1-83, 1-106, 1-107, 1-128, 1-176, 1-177, 1-208, 1-209, 1-224, 1-225, 2-31, 2-32
XA-07871-1L	1-24, 1-25, 1-52, 1-53, 1-82, 1-83, 1-106, 1-107, 1-128, 1-176, 1-177, 1-208, 1-209, 1-224, 1-225, 2-31, 2-32
XA-07871-1L	2-31, 2-32
XA-07871-2	1-24, 1-25, 1-28, 1-52, 1-53, 1-56, 1-82, 1-83, 1-106, 1-107, 1-128, 1-156, 1-176, 1-177, 1-180, 1-208, 1-209, 1-224, 1-225, 1-228, 2-31, 2-32, 2-47
XA-07871-2L	1-24, 1-25, 1-52, 1-53, 1-82, 1-83, 1-106, 1-107, 1-128, 1-176, 1-177, 1-208, 1-209, 1-224, 1-225, 2-31, 2-32
XA-07871-3	1-24, 1-25, 1-28, 1-52, 1-53, 1-56, 1-82, 1-83, 1-106, 1-107, 1-128, 1-156, 1-176, 1-177, 1-180, 1-208, 1-209, 1-224, 1-225, 1-228, 2-31, 2-32, 2-47

PART NUMBER	PAGE NO.
XA-07871-3L	1-24, 1-25, 1-52, 1-53, 1-82, 1-83, 1-106, 1-107, 1-128, 1-176, 1-177, 1-208, 1-209, 1-224, 1-225, 2-31, 2-32
XA-07871-4	1-24, 1-25, 1-28, 1-52, 1-53, 1-56, 1-82, 1-83, 1-106, 1-107, 1-128, 1-156, 1-176, 1-177, 1-180, 1-208, 1-209, 1-224, 1-225, 1-228, 2-31, 2-32, 2-47
XA-07871-4L	1-24, 1-25, 1-52, 1-53, 1-82, 1-83, 1-106, 1-107, 1-128, 1-176, 1-177, 1-208, 1-209, 1-224, 1-225, 2-31, 2-32
XA-07871-5	1-24, 1-25, 1-28, 1-52, 1-53, 1-56, 1-82, 1-83, 1-106, 1-107, 1-128, 1-156, 1-176, 1-177, 1-180, 1-208, 1-209, 1-224, 1-225, 1-228, 2-31, 2-32, 2-47
XA-08125-L	1-69, 1-71, 1-93, 1-95, 1-147, 1-148
XA-08125-R	1-69, 1-71, 1-93, 1-95, 1-147, 1-148
XA-08162	1-161, 1-163, 1-164, 1-165, 1-166, 1-167, 1-168, 1-169, 1-193, 1-195, 1-196, 1-197, 1-198, 1-199, 1-200, 1-201, 1-33, 1-61
XA-08172	1-360
XA-08332-1	1-347, 1-350, 1-351, 1-352, 1-371, 1-373
XA-08408-A	1-233
XA-08408-A-65	1-33, 1-61, 1-233
XA-08408-B	1-33, 1-61, 1-233
XA-08408-B-65	1-33, 1-61, 1-233
XA-08408-C	1-33, 1-61, 1-233
XA-08408-C-65	1-33, 1-61, 1-233
XA-08408-D	1-33, 1-61, 1-233
XA-08408-D-65	1-33, 1-61, 1-233
XA-08408-E	1-33, 1-61, 1-233
XA-08408-E-65	1-33, 1-61, 1-233
XA-08408-F	1-33, 1-61, 1-233

 Amendments and errors reserved. © SAF-HOLLAND, Inc.

PART NUMBER	PAGE NO.
XA-08408-F-65	1-33, 1-61, 1-233
XA-08408-G	1-33, 1-61, 1-233
XA-08408-G-65	1-33, 1-61, 1-233
XA-08408-H	1-33, 1-61, 1-233
XA-08408-H-65	1-33, 1-61, 1-233
XA-08408-J	1-33, 1-61, 1-233
XA-08408-J-65	1-33, 1-61, 1-233
XA-08408-K	1-33, 1-61, 1-233
XA-08408-K-65	1-33, 1-61, 1-233
XA-08408-L	1-33, 1-61, 1-233
XA-08408-L-65	1-33, 1-61, 1-233
XA-08415-1	1-11, 3-23
XA-0861	1-360, 1-360, 1-387
XA-08968	1-349
XA-08988	1-347, 1-350, 1-351, 1-371, 1-373
XA-09039	1-350, 1-371, 1-373
XA-09040	1-347, 1-350, 1-351, 1-371, 1-373
XA-09041	1-347, 1-350, 1-351, 1-371, 1-373, 3-6
XA-09043	1-350, 1-371, 1-373
XA-09181	1-93, 1-94
XA-09409	1-162, 3-10
XA-09416	1-161, 1-163, 1-164, 1-165, 1-166, 1-167, 1-168, 1-169, 1-193, 1-195, 1-196, 1-197, 1-198, 1-199, 1-200, 1-201
XA-09484	1-161, 1-162, 1-163, 1-165, 1-167, 1-193, 1-194, 1-195, 1-197, 1-199, 3-10
XA-09487	1-162, 1-169, 1-194, 1-201, 3-14
XA-09498	1-360
XA-09514	1-161, 1-163, 1-165, 1-167, 1-169, 1-193, 1-195, 1-197, 1-199, 1-201
XA-09558	1-161, 1-163, 1-165, 1-167, 1-169, 1-193, 1-195, 1-197, 1-199, 1-201
XA-09558-1	1-117, 1-120
XA-09580	1-161, 1-164, 1-166, 1-168, 1-193, 1-196, 1-198, 1-200

PART NUMBER	PAGE NO.
XA-09590	1-161, 1-162, 1-163, 1-164, 1-165, 1-166, 1-167, 1-168, 1-169, 1-193, 1-194, 1-195, 1-196, 1-197, 1-198, 1-199, 1-200, 1-201
XA-09632	1-161, 1-162, 1-164, 1-166, 1-168, 1-193, 1-194, 1-196, 1-198, 1-200, 3-16
XA-09790-1	2-66
XA-09790-2	2-66
XA-09790-3	2-66
XA-09790-4	2-66
XA-09790-5	2-66
XA-09790-6	2-66
XA-09790-G1	1-191
XA-09790-G2	1-191
XA-09790-G3A	1-191
XA-09790-G4	1-191
XA-09790-G5	1-191
XA-09790-G6	1-191
XA-09962	1-11, 1-17, 3-24
XA-09963	1-11, 1-17, 1-71, 1-75
XA-10016	1-193, 1-194
XA-10022	1-193, 1-194
XA-1005-FD-3	1-311, 1-313
XA-1005-FDS	1-311, 1-313, 1-355, 1-357
XA-1005-FH	1-305, 1-307, 1-404, 1-407
XA-10149	1-161, 1-193
XA-1016	1-215, 1-216, 1-217, 1-218, 1-407, 3-32
XA-10161	1-161, 1-193, 3-5
XA-10164	1-161, 1-193
XA-1016-C	1-161, 1-165, 1-166, 1-193, 1-197, 1-198, 1-305, 1-307, 1-311, 1-313, 1-355, 1-357, 1-404, 1-407, 3-34
XA-10194	1-193, 1-194
XA-101-D	1-311
XA-101-O	1-311
XA-10256	1-69, 1-70, 1-73, 1-74, 1-75, 3-35
XA-10257	1-69, 1-70, 1-73, 1-74, 1-75
XA-10258	1-69, 1-73, 1-75

PART NUMBER	PAGE NO.
XA-10265	1-69, 1-70, 1-72, 1-73, 1-75
XA-1029	1-9, 1-10, 1-12, 1-13, 1-14, 1-15, 1-16, 1-17, 1-41, 1-43, 1-44, 1-45, 1-46, 1-93, 1-94, 1-96, 1-97, 1-98, 1-99, 1-215, 1-217, 1-218
XA-1029	1-347, 1-351, 1-359, 1-368, 1-371, 1-373, 1-375, 1-376, 1-387, 1-393, 1-395, 1-397, 1-401, 1-404, 1-407
XA-10343	1-69, 1-70, 1-72, 1-73, 1-75
XA-10344	1-69, 1-71, 1-73, 3-7
XA-10364-3-AL-P	1-147, 1-148, 1-150, 3-36
XA-10364-3-P	1-117, 1-118, 1-120, 1-135, 1-136, 1-137, 3-36
XA-10450	1-69, 1-73
XA-10452	1-69, 1-71, 1-72, 1-75, 3-4
XA-10453	1-69, 1-72, 1-75
XA-10459	1-69, 3-22
XA-10474	1-162, 1-163, 1-164, 1-165, 1-166, 1-167, 1-168, 1-169, 1-194, 1-195, 1-196, 1-197, 1-198, 1-199, 1-200, 1-201
XA-10483	1-117, 1-120
XA-10483-A17	1-117, 1-120
XA-10483-AL	1-147, 1-150
XA-10483-ALA	1-147, 1-150
XA-10485-1	1-117, 1-120, 1-135, 1-137, 1-147, 1-150
XA-10486	1-117, 1-118, 1-120, 1-137
XA-10486-A	1-135, 1-136
XA-10486-E-P	1-147
XA-10487-AR-P	1-117, 1-118, 1-120, 1-147, 1-148, 1-150
XA-10487-P	1-117, 1-118, 1-120, 1-135, 1-136, 1-137, 1-147, 1-148, 1-150
XA-10495	1-117, 1-120, 3-9
XA-10495-AL-P	1-147, 1-148, 1-150, 3-9
XA-10495-RP	1-119, 3-15
XA-10495-RP-M-P	1-119, 3-15

 Amendments and errors reserved. © SAF-HOLLAND, Inc.

PART NUMBER	PAGE NO.
XA-10513	1-71, 1-75, 3-23
XA-1055	1-41, 1-42, 1-43, 1-44, 1-45, 1-46, 1-215, 1-216, 1-217, 1-218, 1-397, 1-401, 1-404, 1-407
XA-10604-1	2-22, 2-24, 2-26, 2-28
XA-10606-1	2-22, 2-24, 2-26, 2-28
XA-10700	2-22, 2-24, 2-26
XA-10706-AP	1-135, 1-136, 1-137
XA-10706-P	1-147, 1-149, 1-150
XA-10711-1	2-22, 2-24, 2-26, 2-28
XA-10736	2-22, 2-24, 2-26
XA-10810	1-135, 1-137, 1-147, 1-149, 1-150
XA-10810-1	1-117, 1-118, 1-119, 1-120, 1-147, 1-150
XA-10853	1-75
XA-10853-SP	1-69, 1-70, 1-73, 1-74
XA-10969	1-241, 1-243, 1-244, 1-255, 1-257, 1-258, 1-269, 1-270, 1-271, 1-317, 1-318, 1-321, 1-324, 1-327, 1-328, 1-340, 1-379, 1-380, 1-381
XA-10971	1-241, 1-242, 1-243, 1-244, 1-255, 1-256, 1-257, 1-258, 3-37
XA-10990	1-241, 1-242, 1-243, 1-244, 1-255, 1-256, 1-257, 1-258, 3-10
XA-10999	1-241, 1-242, 1-243, 1-255, 1-256, 1-257
XA-10999-A17	1-117, 1-118, 1-120
XA-10999-AL	1-147, 1-149
XA-1102	1-216, 1-404, 1-407
XA-1102-A	1-215, 1-217, 1-218
XA-11032	2-28
XA-11038	1-147
XA-11039-P	1-147
XA-1103-B	1-215, 1-217, 1-218
XA-1104	1-305, 1-307, 1-311, 1-313, 1-355, 1-357, 1-404, 1-407
XA-1104-1	1-311, 1-313
XA-11112	1-241, 1-242, 1-243, 1-255, 1-256, 1-257, 3-5
XA-11113-P	1-241, 1-242, 1-243, 1-255, 1-256, 1-257

PART NUMBER	PAGE NO.
XA-1117-1	1-215, 1-216, 1-217, 3-16
XA-1117-13	1-311, 1-313, 1-355, 1-357, 3-12
XA-1117-1-L	1-215, 1-216, 1-217, 1-218, 3-11
XA-1117-H	1-305, 1-307, 3-11
XA-1117-UP	1-404, 1-407, 3-15
XA-1118-1	1-215, 1-217, 1-404, 1-407
XA-1118-2-L	1-215, 1-217, 1-218, 1-404, 1-407
XA-1119	1-215, 1-217, 1-218, 1-404, 1-407
XA-11211	1-9, 1-12, 1-96
XA-11292	1-9
XA-11384	1-117, 1-119, 1-120, 3-4
XA-11384-3	1-117, 1-119, 1-120
XA-11384-ALA	1-147, 1-149, 1-150
XA-11409-P	2-28
XA-11458	1-135, 1-137
XA-11479	2-28
XA-11618-P	1-135, 1-137, 3-8
XA-11618-RP-P	1-136, 3-8
XA-11627-L	2-28
XA-11627-R	2-28
XA-11628-P	2-28
XA-11660	1-269, 1-270, 1-271, 1-281, 1-282
XA-11664	1-379, 1-380
XA-11693-P	1-147, 1-148, 1-150
XA-11694	1-359, 1-368
XA-11702	1-347, 1-351
XA-11706	1-375
XA-11712	1-359, 1-368
XA-11713	1-12
XA-11798	1-149
XA-11992	1-15, 1-41, 1-44, 1-46, 1-69, 1-93
XA-11992-L	1-9, 1-13, 1-14, 1-15, 1-16, 1-17, 1-41, 1-43, 1-45, 1-69, 1-73, 1-75, 1-93, 1-97, 1-98, 1-99
XA-11992-R	1-9, 1-13, 1-14, 1-16, 1-41, 1-43, 1-45, 1-69, 1-73, 1-93, 1-97, 1-98
XA-11994	1-74
XA-1284-2	2-55, 2-57, 2-59, 2-60, 2-63, 2-65

PART NUMBER	PAGE NO.
XA-1311-3	1-349
XA-1313	1-41, 1-42, 1-43, 1-44, 1-45, 1-46, 1-359, 1-368, 1-375, 1-376, 1-387, 1-400, 3-30
XA-1313-15	1-42, 3-33
XA-1313-C	1-393, 1-395, 1-397, 1-401, 3-32
XA-1507	1-9, 1-10, 1-12, 1-13, 1-14, 1-15, 1-16, 1-17, 1-41, 1-43, 1-44, 1-45, 1-46, 1-93, 1-94, 1-96, 1-97, 1-98, 1-99, 1-368, 1-393, 1-395, 1-397, 1-401
XA-1507-1	1-347, 1-350, 1-351, 1-359, 1-368, 1-371, 1-373, 1-375, 1-376, 1-387
XA-1512	1-376
XA-1532	1-376
XA-1581-A-1	1-408
XA-1584-2	1-355
XA-1589-1	1-355
XA-1595	1-355
XA-1595-A	1-355, 1-356
XA-1596	1-355
XA-1597	1-355
XA-1621	1-215, 1-216, 1-217, 1-218, 1-404, 1-407
XA-1668	1-215, 1-218
XA-1674	1-215, 1-218, 3-20
XA-1703-F	1-41, 1-43, 1-387
XA-1704	1-41, 1-42, 1-43, 1-44, 1-45, 1-46
XA-1704-X	1-359, 1-368, 1-375, 1-376, 1-387
XA-1705	1-15, 1-41, 1-43, 1-44, 1-45, 1-46, 1-368, 1-397
XA-1705-11	1-359, 1-368, 1-387
XA-1705-7A	1-375, 1-376
XA-1705-9	1-393, 1-395
XA-1705-P	1-9, 1-12, 1-93, 1-96, 1-99
XA-1706	1-9, 1-10, 1-12, 1-13, 1-14, 1-15, 1-16, 1-17, 1-41, 1-43, 1-44, 1-45, 1-46, 1-69, 1-70, 1-73, 1-74, 1-75, 1-93, 1-94, 1-96, 1-97, 1-98, 1-99

 Amendments and errors reserved. © SAF-HOLLAND, Inc.

PART NUMBER	PAGE NO.
XA-1706-1	1-347, 1-350, 1-351, 1-359, 1-368, 1-371, 1-373, 1-375, 1-376, 1-387
XA-1706-3	1-393, 1-395, 1-397, 1-401
XA-1707-16	1-359, 1-368, 1-387, 3-5
XA-1707-2	1-397, 1-400, 3-19
XA-1707-5	1-375, 1-376, 3-6
XA-1707-6	1-41, 1-42, 1-43, 1-44, 1-45, 1-46, 3-16
XA-1707-M	1-41, 1-42, 1-43, 1-44, 1-45, 1-46, 3-11
XA-1901-A-LH-P	1-399
XA-1901-A-P	1-398, 1-399
XA-1934-1	2-28
XA-2016	1-11, 1-41, 1-42, 1-373, 3-26
XA-2016-P	1-215, 1-216
XA-2501	2-30, 2-34, 2-38, 2-46, 2-48, 2-50, 2-63, 2-65
XA-2503	2-30, 2-34, 2-38, 2-46, 2-48, 2-50, 2-63, 2-65
XA-2524-03185-1	1-359, 1-368
XA-2524-03185-4	1-387
XA-2524-07237	1-412
XA-2524-07237-1	1-412
XA-2524-17	1-161, 1-193
XA-2524-R	1-408, 2-30, 2-34, 2-38, 2-46, 2-48, 2-50, 2-63, 2-65
XA-2524-R1	1-412
XA-2524-R-12	1-412
XA-2524-R-13-1	1-347, 1-351, 1-373, 1-408, 1-412
XA-2524-R-13-2	1-412
XA-2524-R-13-3	1-412
XA-2524-R-13-4	1-371
XA-2524-R-13-X	1-359, 1-368, 1-412
XA-2524-R-15-L	1-412
XA-2524-R-15-R	1-412
XA-2524-R-16-L	1-9, 1-10, 1-12, 1-15, 1-69, 1-72, 1-75, 1-93, 1-94, 1-96, 1-99, 1-412
XA-2524-R-2	1-412
XA-2524-R-4-1	1-376, 1-408, 1-412
XA-2524-R-4-2	1-412

PART NUMBER	PAGE NO.
XA-2524-R-4-3	1-412
XA-2632	1-305, 3-29
XA-2710-1	1-360, 1-361
XA-2710-87	1-360
XA-2756-2	1-360, 1-361
XA-2756-3	1-360
XA-2760-R-1	1-412
XA-2774-2	1-360, 1-361
XA-278	1-404, 1-407
XA-279	1-404, 1-407
XA-2801-03185-1S	1-408
XA-2801-07486-1	1-360
XA-2801-AX-1	1-360, 1-361
XA-2806-2	1-360, 1-361
XA-2807-2-B	1-361
XA-2807-B	1-360, 1-361
XA-2809	1-360, 1-361, 1-387, 3-28
XA-2810-1	1-360, 1-361
XA-2810-87	1-360
XA-2811	1-360, 1-361
XA-2836	1-368, 1-387
XA-2836-1	1-368, 1-387
XA-2893	1-360, 1-361
XA-2894	1-360
XA-2894-2	1-361
XA-2895	1-360, 1-361
XA-2906	1-360
XA-2906-1	1-361
XA-2907-1-B	1-361
XA-2907-B	1-360
XA-2908-B	1-360, 1-361
XA-292-10	1-361
XA-292-12	1-360
XA-292-14	1-360
XA-292-15	1-361
XA-3514	1-41, 1-42, 1-43, 1-44, 1-45, 1-46, 1-397, 1-401
XA-3528	1-347, 1-351, 1-359, 1-368, 1-371, 1-373, 1-387
XA-3542-L	1-393, 1-395, 1-397
XA-3542-M	1-9, 1-41, 1-44, 1-46, 1-93, 3-22

PART NUMBER	PAGE NO.
XA-3542-M-P	1-14, 1-15, 1-98
XA-3542-R	1-375, 1-376, 1-397, 1-401
XA-3544-1-A	1-359, 1-368, 1-387, 3-18
XA-3546	1-347, 1-351, 1-371, 1-373, 3-21
XA-3601-31	1-407
XA-39	2-55, 2-57, 2-59, 2-60, 2-63, 2-65
XA-40-7701	1-31, 1-59, 1-87, 1-111, 1-183, 1-231, 2-59
XA-40-7702	1-31, 1-59, 1-87, 1-111, 1-183, 1-231, 2-59
XA-40-7703	1-31, 1-59, 1-87, 1-111, 1-183, 1-231, 2-59
XA-40-7711-G	1-38, 1-66, 1-190, 1-238, 1-190, 1-238, 2-61
XA-40-7712-G	1-38, 1-66, 1-190, 1-238, 2-61
XA-40-7713-G	1-38, 1-66, 1-190, 1-238, 2-61
XA-40-7721	1-182, 2-57
XA-40-7722	1-30, 1-58, 1-86, 1-110, 1-182, 1-230, 2-57
XA-40-7723	1-30, 1-58, 1-86, 1-110, 1-182, 1-230, 2-57
XA-40-7724	1-30, 1-58, 1-86, 1-110, 1-230
XA-40-7726	1-30, 1-58, 1-86, 1-110, 1-182, 1-230, 2-55
XA-40-7727	1-30, 1-58, 1-86, 1-110, 1-182, 1-230, 2-55
XA-40-7729	1-30, 1-58, 1-86, 1-110, 1-182, 1-230, 2-55
XA-4109931	1-281
XA-4109939	1-241, 1-242, 1-243, 1-244, 1-255, 1-256, 1-257, 1-258, 1-269, 1-270, 1-271, 1-281, 1-282, 1-293, 1-294, 1-317, 1-318, 1-321, 1-323, 1-331, 1-332, 1-335, 1-336, 1-339, 1-340
XA-6001-3	1-393, 1-397
XA-6001-4	1-393, 1-395, 1-397, 1-400
XA-6002	1-393, 1-395, 1-397, 1-400
XA-6003	1-393, 1-395, 3-19

XL-FW10081PM-en-US Rev C 2013-10-1 Amendments and errors reserved. © SAF-HOLLAND, Inc.

PART NUMBER	PAGE NO.
XA-6004	1-393, 1-395, 1-397, 1-400, 3-29
XA-61-A	1-375
XA-62	1-375
XA-63-1	1-375
XA-64	1-375
XA-6510	1-393
XA-6520	1-393
XA-6520-A	1-397, 1-400
XA-6704-1-B	1-349
XA-6704-B	1-349
XA-6705-12	1-349
XA-6705-4	1-349
XA-6714-1-L	1-349
XA-6714-1-R	1-349
XA-6715-1-B	1-349
XA-6718-1	1-349
XA-6730-1	1-349
XA-6742-1	1-349
XA-6755	1-349
XA-6757	1-349
XB-767	283
XA-6765-1	1-349
XA-6766-1	1-349
XA-6766-13	1-349
XA-6766-2	1-349
XA-6798-B-1	1-349
XA-6798-B-3	1-349
XA-6847-3	1-349
XA-6847-4	1-349
XA-6847-5	1-349
XA-6930-1	1-349
XA-6942-1	1-349
XA-7001	1-25, 1-27, 1-37, 1-53, 1-55, 1-65, 1-83, 1-85, 1-91, 1-109, 1-115, 1-128, 1-177, 1-179, 1-189, 1-208, 1-211, 1-225, 1-227, 1-237, 2-31, 2-35, 2-39
XA-7001-G6-__	2-39
XA-7001-X6	1-27, 1-55, 1-85, 1-109, 1-179, 1-211, 2-35
XA-7002	1-24, 1-26, 1-36, 1-37, 1-52, 1-54, 1-64, 1-82, 1-84, 1-90, 1-91, 1-106, 1-107, 1-108, 1-114, 1-115, 1-128, 1-132, 1-156, 1-176, 1-178,

PART NUMBER	PAGE NO.
XA-7002	1-188, 1-189, 1-208, 1-210, 1-224, 1-226, 1-236, 1-237, 2-31, 2-35, 2-39
XA-7002-G6-__	2-39
XA-7002-X6	1-26, 1-54, 1-84, 1-108, 1-178, 1-210, 2-35
XA-7002-X7	1-26, 1-54, 1-84, 1-108, 1-178, 2-35
XA-7003	1-24, 1-26, 1-36, 1-52, 1-54, 1-64, 1-82, 1-84, 1-90, 1-106, 1-108, 1-114, 1-176, 1-188, 1-224, 1-226, 1-236, 2-31, 2-35, 2-39
XA-7003-1	1-128, 1-129, 1-178, 1-208, 1-210
XA-7003-G6-__	2-39
XA-7003-X6	1-26, 1-54, 1-84, 1-108, 1-178, 1-210, 2-35
XA-7009	1-25, 1-27, 1-37, 1-53, 1-55, 1-65, 1-83, 1-85, 1-91, 1-107, 1-109, 1-115, 1-128, 1-156, 1-177, 1-179, 1-189, 1-225, 1-227, 1-237, 2-32, 2-35, 2-39
XA-7009-G2-__	2-39
XA-7009-G3-__	2-39
XA-7009-G4-__	2-39
XA-7009-G5-__	2-39
XA-7009-G6-__	2-39
XA-7009-G7-__	2-39
XA-7009-X2	1-27, 1-55, 1-85, 1-109, 1-179, 2-35
XA-7009-X3	1-27, 1-55, 1-85, 1-109, 1-179, 2-35
XA-7009-X4	1-27, 1-55, 1-85, 1-109, 1-179, 2-35
XA-7009-X5	1-27, 1-55, 1-85, 1-109, 1-179, 2-35
XA-7009-X6	1-27, 1-55, 1-85, 1-109, 1-179, 2-35
XA-7011	1-25, 1-27, 1-37, 1-53, 1-55, 1-65, 1-83, 1-85, 1-91, 1-107, 1-109, 1-115, 1-177, 1-179, 1-189, 1-211, 1-225, 1-227, 1-237, 2-32, 2-36, 2-40
XA-7011-G6-__	2-40
XA-7011-X6	1-27, 1-55, 1-85, 1-109, 1-179, 1-211, 2-36

PART NUMBER	PAGE NO.
XA-7012	1-25, 1-27, 1-37, 1-53, 1-55, 1-65, 1-83, 1-85, 1-91, 1-107, 1-109, 1-115, 1-177, 1-179, 1-189, 1-209, 1-211, 1-225, 1-227, 1-237, 2-32, 2-36, 2-40
XA-7012-G6-__	2-40
XA-7012-X6	1-27, 1-55, 1-85, 1-109, 1-179, 1-211, 2-36
XA-7013	1-25, 1-27, 1-37, 1-53, 1-55, 1-65, 1-83, 1-85, 1-91, 1-107, 1-109, 1-115, 1-128, 1-177, 1-179, 1-189, 1-225, 1-227, 1-237, 2-32, 2-36, 2-40
XA-7013-1	1-211
XA-7013-G6-__	2-40
XA-7013-X6	1-27, 1-55, 1-85, 1-109, 1-179, 1-211, 2-36
XA-7019	1-25, 1-27, 1-37, 1-53, 1-55, 1-65, 1-83, 1-85, 1-91, 1-107, 1-109, 1-115, 1-177, 1-179, 1-189, 1-225, 1-227, 1-237, 2-31, 2-36, 2-40
XA-71-03706	1-305
XA-71-DAP	1-305
XA-71-OAP	1-305
XA-7201	1-31, 1-39, 1-59, 1-67, 1-87, 1-111, 1-183, 1-191, 1-231, 1-239, 2-63, 2-66
XA-7301	1-25, 1-27, 1-37, 1-53, 1-55, 1-65, 1-83, 1-85, 1-91, 1-107, 1-109, 1-115, 1-189, 1-225, 1-227, 1-237, 2-32, 2-35, 2-39
XA-7301-1	1-177, 1-179, 1-209, 1-211
XA-7301-G1-__	2-39
XA-7301-G2-__	2-39
XA-7301-G3-__	2-39
XA-7301-G4-__	2-39
XA-7301-G5-__	2-39
XA-7301-G6-__	2-39
XA-7301-X1	1-27, 1-55, 1-85, 1-109, 1-179, 1-211, 2-35
XA-7301-X2	1-27, 1-55, 1-85, 1-109, 1-179, 1-211, 2-35
XA-7301-X3	1-27, 1-55, 1-85, 1-109, 1-179, 1-211, 2-35

 Amendments and errors reserved. © SAF-HOLLAND, Inc.

PART NUMBER	PAGE NO.
XA-7301-X4	1-27, 1-55, 1-85, 1-109, 1-179, 1-211, 2-35
XA-7301-X5	1-27, 1-55, 1-85, 1-109, 1-179, 1-211, 2-35
XA-7301-X6	1-27, 1-55, 1-85, 1-109, 1-179, 1-211, 2-35
XA-7311	1-25, 1-27, 1-37, 1-53, 1-55, 1-65, 1-83, 1-85, 1-91, 1-107, 1-109, 1-115, 1-177, 1-179, 1-189, 1-211, 1-225, 1-227, 1-237, 2-31, 2-36, 2-40
XA-7311-G1-__	2-40
XA-7311-G2-__	2-40
XA-7311-G3-__	2-40
XA-7311-G4-__	2-40
XA-7311-G5-__	2-40
XA-7311-G6-__	2-40
XA-7311-X1	1-27, 1-55, 1-85, 1-109, 1-179, 1-211, 2-36
XA-7311-X2	1-27, 1-55, 1-85, 1-109, 1-179, 1-211, 2-36
XA-7311-X3	1-27, 1-55, 1-85, 1-109, 1-179, 1-211, 2-36
XA-7311-X4	1-27, 1-55, 1-85, 1-109, 1-179, 1-211, 2-36
XA-7311-X5	1-27, 1-55, 1-85, 1-109, 1-179, 1-211, 2-36
XA-7311-X6	1-27, 1-55, 1-85, 1-109, 1-179, 1-211, 2-36
XA-7401	1-28, 1-29, 1-35, 1-56, 1-57, 1-62, 1-180, 1-181, 1-186, 1-228, 1-229, 1-234, 2-47, 2-49, 2-51
XA-7401-G2__	2-51
XA-7401-G2-__	1-35, 1-62, 1-186, 1-234
XA-7401-G3__	2-51
XA-7401-G3-__	1-35, 1-62, 1-186, 1-234
XA-7401-G4__	2-51
XA-7401-G4-__	1-35, 1-62, 1-186, 1-234
XA-7401-G5__	2-51
XA-7401-G5-__	1-35, 1-62, 1-186, 1-234
XA-7401-G6__	2-51
XA-7401-G6-__	1-35, 1-62, 1-186, 1-234
XA-7401-G7__	2-51
XA-7401-X2	2-49
XA-7401-X2-11	1-29, 1-181
XA-7401-X3	2-49

PART NUMBER	PAGE NO.
XA-7401-X3-11	1-29, 1-181
XA-7401-X4	2-49
XA-7401-X4-11	1-29, 1-181
XA-7401-X5	2-49
XA-7401-X5-11	1-29, 1-181
XA-7401-X6	2-49
XA-7401-X6-11	1-29, 1-181
XA-7409	1-28, 1-29, 1-35, 1-56, 1-57, 1-62, 1-180, 1-181, 1-186, 1-228, 1-229, 1-234, 2-47, 2-49, 2-51
XA-7409-G2__	2-51
XA-7409-G2-__	1-35, 1-62, 1-186, 1-234
XA-7409-G3__	2-51
XA-7409-G3-__	1-35, 1-62, 1-186, 1-234
XA-7409-G4__	2-51
XA-7409-G4-__	1-35, 1-62, 1-186, 1-234
XA-7409-G5__	2-51
XA-7409-G5-__	1-35, 1-62, 1-186, 1-234
XA-7409-G6__	2-51
XA-7409-G6-__	1-35, 1-62, 1-186, 1-234
XA-7409-G7__	2-51
XA-7409-X2	2-49
XA-7409-X2-11	1-29, 1-181
XA-7409-X3	2-49
XA-7409-X3-11	1-29, 1-181
XA-7409-X4	2-49
XA-7409-X4-11	1-29, 1-181
XA-7409-X5	2-49
XA-7409-X5-11	1-29, 1-181
XA-7409-X6	2-49
XA-7409-X6-11	1-29, 1-181
XA-7411	1-28, 1-29, 1-35, 1-56, 1-57, 1-62, 1-180, 1-181, 1-187, 1-228, 1-229, 1-234, 2-47, 2-49, 2-51
XA-7411-G2__	2-51
XA-7411-G2-__	1-35, 1-62, 1-187, 1-234
XA-7411-G3__	2-51
XA-7411-G3-__	1-35, 1-62, 1-187, 1-234

PART NUMBER	PAGE NO.
XA-7411-G4-__	1-35, 1-62, 1-187, 1-234
XA-7411-G5__	2-51
XA-7411-G5-__	1-35, 1-62, 1-187, 1-234
XA-7411-G6__	2-51
XA-7411-G6-__	1-35, 1-62, 1-187, 1-234
XA-7411-G7__	2-51
XA-7411-X2	2-49
XA-7411-X2-11	1-29, 1-181
XA-7411-X3	2-49
XA-7411-X3-11	1-29, 1-181
XA-7411-X4	2-49
XA-7411-X4-11	1-29, 1-181
XA-7411-X5	2-49
XA-7411-X5-11	1-29, 1-181
XA-7411-X6	2-49
XA-7411-X6-11	1-29, 1-181
XA-7419	1-28, 1-29, 1-35, 1-56, 1-57, 1-62, 1-180, 1-181, 1-187, 1-228, 1-229, 1-234, 2-47, 2-49, 2-51
XA-7419-G2__	2-51
XA-7419-G2-__	1-35, 1-62, 1-187, 1-234
XA-7419-G3__	2-51
XA-7419-G3-__	1-35, 1-62, 1-187, 1-234
XA-7419-G4__	2-51
XA-7419-G4-__	1-35, 1-62, 1-187, 1-234
XA-7419-G5__	2-51
XA-7419-G5-__	1-35, 1-62, 1-187, 1-234
XA-7419-G6__	2-51
XA-7419-G6-__	1-35, 1-62, 1-187, 1-234
XA-7419-G7__	2-51
XA-7419-X2	2-49
XA-7419-X2-11	1-29, 1-181
XA-7419-X3	2-49
XA-7419-X3-11	1-29, 1-181
XA-7419-X4	2-49
XA-7419-X4-11	1-29, 1-181
XA-7419-X5	2-49
XA-7419-X5-11	1-29, 1-181
XA-7419-X6	2-49
XA-7419-X6-11	1-29, 1-181
XA-7551-G	1-32, 1-60, 1-88, 1-112, 1-184, 1-232
XA-7552-G	1-32, 1-60, 1-88, 1-112, 1-130, 1-184, 1-232

 Amendments and errors reserved. © SAF-HOLLAND, Inc.

PART NUMBER	PAGE NO.
XA-7553-G	1-32, 1-60, 1-88, 1-112, 1-130, 1-184, 1-232
XA-7601	1-308
XA-7602	1-308
XA-7603	1-308
XA-7611-G	1-309
XA-7612-G	1-309
XA-7613-G	1-309
XA-7614-G	1-309
XA-7621	1-309
XA-7622	1-309
XA-7623	1-309
XA-7683	1-308
XA-7684	1-308
XA-7685	1-308
XA-782	1-355
XA-8002-T3	1-156
XA-8019-T2	1-25, 1-83, 1-107, 1-177, 2-32
XA-8019-T3	1-25, 1-83, 1-107, 1-177, 2-32
XA-8019-T4	1-25, 1-83, 1-107, 1-177, 2-32
XA-8019-T5	1-25, 1-83, 1-107, 1-177, 2-32
XA-8301-T1	1-25, 1-83, 1-107, 1-128, 1-156, 1-177, 2-31
XA-8301-T2	1-25, 1-83, 1-107, 1-128, 1-156, 1-177, 2-31
XA-8301-T3	1-25, 1-83, 1-107, 1-128, 1-156, 1-177, 2-31
XA-8301-T4	1-25, 1-83, 1-107, 1-177, 2-31
XA-8311-T1	1-25, 1-83, 1-107, 1-177, 1-209, 2-31, 2-32
XA-8311-T2	1-25, 1-83, 1-107, 1-177, 1-209, 2-31, 2-32
XA-8311-T3	1-25, 1-83, 1-107, 1-177, 1-209, 2-31, 2-32
XA-8311-T4	1-25, 1-83, 1-107, 1-177, 1-209, 2-31, 2-32
XA-8401-T2	1-28, 1-56, 1-180, 1-228, 2-47
XA-8401-T3	1-28, 1-56, 1-180, 1-228, 2-47

PART NUMBER	PAGE NO.
XA-8401-T4	1-28, 1-56, 1-180, 1-228, 2-47
XA-8401-T5	1-28, 1-56, 1-180, 1-228, 2-47
XA-8409-T2	1-28, 1-56, 1-180, 1-228, 2-47
XA-8409-T3	1-28, 1-56, 1-180, 1-228, 2-47
XA-8409-T4	1-28, 1-56, 1-180, 1-228, 2-47
XA-8409-T5	1-28, 1-56, 1-180, 1-228, 2-47
XA-8411-T2	1-28, 1-56, 1-180, 1-228, 2-47
XA-8411-T3	1-28, 1-56, 1-180, 1-228, 2-47
XA-8411-T4	1-28, 1-56, 1-180, 1-228, 2-47
XA-8411-T5	1-28, 1-56, 1-180, 1-228, 2-47
XA-8419-T2	1-28, 1-56, 1-180, 1-228, 2-47
XA-8419-T3	1-28, 1-56, 1-180, 1-228, 2-47
XA-8419-T4	1-28, 1-56, 1-180, 1-228, 2-47
XA-8419-T5	1-28, 1-56, 1-180, 1-228, 2-47
XA-8922	1-21, 1-50, 1-174, 1-223, 2-19
XA-8922-A	2-21
XA-8922-A-21	2-21
XA-8922-A-51	2-21
XA-8922-A-57	2-21
XA-8922-A-65	2-21
XA-8983	1-21, 1-49, 1-174, 1-222, 2-19
XA-8984	1-21, 1-49, 1-174, 1-222, 2-19
XA-A12	1-22, 1-80, 1-104, 1-126, 1-142, 1-154, 1-173, 1-206, 1-249, 1-263, 2-23
XA-A24	1-22, 1-80, 1-104, 1-126, 1-142, 1-154, 1-173, 1-206, 1-249, 1-263, 2-23
XA-A36	1-22, 1-80, 1-104, 1-126, 1-142, 1-154, 1-173, 1-206, 1-249, 1-263, 2-23

PART NUMBER	PAGE NO.
XA-A36	1-22, 1-80, 1-104, 1-126, 1-142, 1-154, 1-173, 1-206, 1-249, 1-263, 2-23
XA-A48	1-22, 1-80, 1-104, 1-126, 1-142, 1-154, 1-173, 1-206, 1-249, 1-263, 2-23
XA-A712	1-22, 1-80, 1-104, 1-126, 1-142, 1-154, 1-173, 1-206, 1-249, 1-263, 2-23
XA-A724	1-22, 1-80, 1-104, 1-126, 1-142, 1-154, 1-173, 1-206, 1-249, 1-263, 2-23
XA-A736	1-22, 1-80, 1-104, 1-126, 1-142, 1-154, 1-173, 1-206, 1-249, 1-263, 2-23
XA-A748	1-22, 1-80, 1-104, 1-126, 1-142, 1-154, 1-173, 1-206, 1-249, 1-263, 2-23
XA-A812	1-22, 1-80, 1-104, 1-126, 1-142, 1-154, 1-173, 1-206, 1-249, 1-263, 2-23
XA-A824	1-22, 1-80, 1-104, 1-126, 1-142, 1-154, 1-173, 1-206, 1-249, 1-263, 2-23
XA-A836	1-22, 1-80, 1-104, 1-126, 1-142, 1-154, 1-173, 1-206, 1-249, 1-263, 2-23
XA-A848	1-22, 1-80, 1-104, 1-126, 1-142, 1-154, 1-173, 1-206, 1-249, 1-263, 2-23
XA-A912	1-22, 1-80, 1-104, 1-126, 1-142, 1-154, 1-173, 1-206, 1-249, 1-263, 2-23
XA-7201	1-31, 1-39, 1-59, 1-67, 1-87, 1-111, 1-183, 1-191, 1-231, 1-239, 2-63, 2-66
XA-A924	1-22, 1-80, 1-104, 1-126, 1-142, 1-154, 1-173, 1-206, 1-249, 1-263, 2-23
XA-A936	1-22, 1-80, 1-104, 1-126, 1-142, 1-154, 1-173, 1-206, 1-249, 1-263, 2-23

 Amendments and errors reserved. © SAF-HOLLAND, Inc.

PART NUMBER	PAGE NO.
XA-A948	1-22, 1-80, 1-104, 1-126, 1-142, 1-154, 1-173, 1-206, 1-249, 1-263, 2-23
XA-AL-11384-P	1-147, 1-149, 1-150
XA-B12	1-23, 1-81, 1-105, 1-127, 1-143, 1-155, 1-250, 1-264
XA-B12G	1-34, 1-89, 1-113, 1-131, 1-145, 1-158, 1-185, 1-213, 1-252, 1-266, 2-27
XA-B12X	1-175, 1-207, 2-25
XA-B24	1-23, 1-81, 1-105, 1-127, 1-143, 1-155, 1-250, 1-264
XA-B24G	1-34, 1-89, 1-113, 1-131, 1-145, 1-158, 1-185, 1-213, 1-252, 1-266, 2-27
XA-B24X	1-175, 1-207, 2-25
XA-B36	1-23, 1-81, 1-105, 1-127, 1-143, 1-155, 1-250, 1-264
XA-B36G	1-34, 1-89, 1-113, 1-131, 1-145, 1-158, 1-185, 1-213, 1-252, 1-266, 2-27
XA-B36X	1-175, 1-207, 2-25
XA-B48	1-23, 1-81, 1-105, 1-127, 1-143, 1-155, 1-250, 1-264
XA-B48G	1-34, 1-89, 1-113, 1-131, 1-145, 1-158, 1-185, 1-213, 1-252, 1-266, 2-27
XA-B48X	1-175, 1-207, 2-25
XA-B712	1-23, 1-81, 1-105, 1-127, 1-143, 1-155, 1-250, 1-264
XA-B712G	1-34, 1-89, 1-113, 1-131, 1-145, 1-158, 1-185, 1-213, 1-252, 1-266, 2-27
XA-B712X	2-25
XA-B724G	1-34, 1-89, 1-113, 1-252, 1-266, 2-27
XA-B724X	1-175, 1-207, 2-25
XA-B736	1-23, 1-81, 1-105, 1-127, 1-143, 1-155, 1-250, 1-264
XA-B736G	1-34, 1-89, 1-113, 1-131, 1-145, 1-158, 1-185, 1-213, 1-252, 1-266, 2-27

PART NUMBER	PAGE NO.
XA-B736X	1-175, 1-207, 2-25
XA-B748	1-23, 1-81, 1-105, 1-127, 1-143, 1-155, 1-250, 1-264
XA-B748G	1-34, 1-89, 1-113, 1-131, 1-145, 1-158, 1-185, 1-213, 1-252, 1-266, 2-27
XA-B748X	1-175, 1-207, 2-25
XA-B812	1-23, 1-81, 1-105, 1-127, 1-143, 1-155, 1-250, 1-264
XA-B812G	1-34, 1-89, 1-113, 1-131, 1-145, 1-158, 1-185, 1-213, 1-252, 1-266, 2-27
XA-B812X	1-175, 1-207, 2-25
XA-B824	1-23, 1-81, 1-105, 1-127, 1-143, 1-155, 1-250, 1-264
XA-B824G	1-34, 1-89, 1-113, 1-131, 1-145, 1-158, 1-185, 1-213, 1-252, 1-266, 2-27
XA-B824X	1-175, 1-207, 2-25
XA-B836	1-23, 1-81, 1-105, 1-127, 1-143, 1-155, 1-250, 1-264
XA-B836G	1-34, 1-89, 1-113, 1-131, 1-145, 1-158, 1-185, 1-213, 1-252, 1-266, 2-27
XA-B836X	1-175, 1-207, 2-25
XA-B848	1-23, 1-81, 1-105, 1-127, 1-143, 1-155, 1-250, 1-264
XA-B848G	1-34, 1-89, 1-113, 1-131, 1-145, 1-158, 1-185, 1-213, 1-252, 1-266, 2-27
XA-B848X	1-175, 1-207, 2-25
XA-B912	1-23, 1-81, 1-105, 1-127, 1-143, 1-155, 1-250, 1-264
XA-B912G	1-34, 1-89, 1-113, 1-131, 1-145, 1-158, 1-185, 1-213, 1-252, 1-266, 2-27
XA-B912X	1-175, 1-207, 2-25
XA-B924	1-23, 1-81, 1-105, 1-127, 1-143, 1-155, 1-250, 1-264
XA-B924G	1-34, 1-89, 1-113, 1-131, 1-145, 1-158,

PART NUMBER	PAGE NO.
XA-B924G	1-185, 1-213, 1-252, 1-266, 2-27
XA-B924X	1-175, 1-207, 2-25
XA-B936	1-23, 1-81, 1-105, 1-127, 1-143, 1-155, 1-250, 1-264
XA-B936G	1-34, 1-89, 1-113, 1-131, 1-145, 1-158, 1-185, 1-213, 1-252, 1-266, 2-27
XA-B936X	1-175, 1-207, 2-25
XA-B948	1-23, 1-81, 1-105, 1-127, 1-143, 1-155, 1-250, 1-264
XA-B948G	1-34, 1-89, 1-113, 1-131, 1-145, 1-158, 1-185, 1-213, 1-252, 1-266, 2-27
XA-B948X	1-175, 1-207, 2-25
XA-FW-102	1-311
XA-FW-102-C	1-311
XA-FW-103	1-311
XA-FW-104-03	1-305, 1-311, 1-313, 1-355, 1-357
XA-FW-104-D	1-305, 1-307, 1-311, 1-313, 1-355, 1-357
XA-FW-106	1-311, 3-28
XA-FW-107	1-311
XA-FW-108-D	1-305, 1-355, 3-34
XA-FW-108-D-1	1-311, 1-313, 3-33
XA-FW-108-D-15	1-305, 1-307, 1-357, 3-34
XA-FW-113-D	1-311
XA-FW-128	1-305, 1-307, 1-311, 1-313, 1-355, 1-357
XA-FW-137-2	1-305, 1-307, 1-311, 1-313, 1-355, 1-357
XA-FW-138	1-311, 1-313, 1-355, 1-357, 3-21
XA-FW-78	1-305, 1-307, 3-21
XA-H-15-C-60	1-375
XA-H-72-A	1-375
XA-S02087	1-368
XA-S02089-1-A	1-368
XA-S0849	1-368
XA-T-56	1-393, 1-395, 1-397, 1-400
XA-T-9N-2	1-393, 1-395, 1-397, 1-400
XB-0009	2-55, 2-57, 2-59, 2-60, 2-63, 2-65

PART NUMBER	PAGE NO.
XB-0011	1-373, 1-413, 2-55, 2-57, 2-59, 2-60, 2-63, 2-65
XB-0011-1	1-413
XB-0011-2	1-11, 1-42, 1-71, 1-95, 1-119, 1-136, 1-149, 1-162, 1-194, 1-216, 1-242, 1-256, 1-413, 2-30, 2-34, 2-38, 2-46, 2-48, 2-50
XB-0012-1	1-305, 1-413
XB-0012-3	1-305, 1-413
XB-010035	1-347, 1-351
XB-0103	1-349, 1-360, 1-361, 1-387
XB-0111	1-349
XB-01331	1-349
XB-0140	1-349
XB-0144	1-349
XB-0148	1-349
XB-01561	1-393
XB-01611	1-161, 1-193
XB-01730	1-362, 1-363, 1-369
XB-01786	1-362, 1-363, 1-369
XB-01788	1-363, 1-369
XB-0181	1-363, 1-369
XB-01923	2-55, 2-57, 2-59, 2-60, 2-63, 2-65
XB-01924	1-363, 1-369
XB-01959	1-12, 1-72, 1-96, 1-352
XB-01961	1-12, 1-72, 1-96, 1-162, 1-163, 1-164, 1-165, 1-166, 1-167, 1-168, 1-169, 1-194, 1-195, 1-196, 1-197, 1-198, 1-199, 1-200, 1-201, 1-352
XB-01978	1-393, 1-397, 1-400
XB-01996	1-12, 1-72, 1-96, 1-352, 1-359, 1-368
XB-02208	1-362, 1-369
XB-02209	1-362, 1-369
XB-02312	1-9, 1-10, 1-13, 1-14, 1-15, 1-16, 1-17, 1-41, 1-43, 1-44, 1-45, 1-46, 1-69, 1-70, 1-73, 1-74, 1-75, 1-93, 1-94, 1-97, 1-98, 1-99, 1-393, 1-395, 1-397, 1-401
XB-0255	1-363, 1-369
XB-0257	1-363, 1-369

PART NUMBER	PAGE NO.
XB-0258-1	1-363, 1-369
XB-02724-1	1-117, 1-118, 1-120, 1-147, 1-150
XB-02724-M	1-135, 1-136, 1-137, 1-147, 1-149, 1-150
XB-02846	1-215, 1-217, 1-218, 1-404, 1-407
XB-02949	1-305, 1-307, 1-311, 1-313, 1-355, 1-357, 1-404, 1-407
XB-02967	1-9, 1-10, 1-13, 1-14, 1-15, 1-16, 1-17, 1-42, 1-43, 1-44, 1-45, 1-46, 1-70, 1-73, 1-75, 1-94, 1-97, 1-98, 1-99, 1-118, 1-120, 1-136, 1-137, 1-147, 1-148, 1-150, 1-163, 1-164, 1-165, 1-166, 1-167, 1-168, 1-169, 1-195, 1-196, 1-197, 1-198, 1-199, 1-200, 1-201, 1-216, 1-217, 1-218, 1-244, 1-257, 1-258, 1-307, 1-313, 1-350, 1-352, 1-357, 1-368, 1-371, 1-373, 1-376, 1-395, 1-401, 1-407
XB-03124-BFU	1-135, 1-137
XB-03371	1-311
XB-03429	1-375
XB-03437	1-375
XB-03531	1-215, 1-216, 1-217, 1-218, 1-404, 1-407
XB-03553	1-147, 1-349
XB-03684	1-404, 1-407
XB-03730-1	2-30, 2-34, 2-38, 2-46, 2-48, 2-50
XB-03942	1-349
XB-04067	1-349
XB-04473	1-305, 1-307, 1-311, 1-313, 1-355, 1-357
XB-04476	1-362, 1-369
XB-04477	1-363, 1-369
XB-04478	1-362, 1-369
XB-04479	1-363, 1-369
XB-04480-1	1-363, 1-369
XB-05169	1-349
XB-05501	1-369
XB-05635	1-93, 1-94
XB-05843-1-P	1-117, 1-120, 1-147, 1-150

PART NUMBER	PAGE NO.
XB-05855	1-147, 1-150
XB-05855-1	1-117, 1-118, 1-120, 1-135, 1-137, 1-147, 1-148, 1-150
XB-05859-1	1-9, 1-10, 1-69, 1-70, 1-73, 1-75, 1-93, 1-94, 1-350, 1-352
XB-05859-2	1-117, 1-118, 1-120, 1-147, 1-148, 1-150, 1-161, 1-163, 1-164, 1-165, 1-166, 1-167, 1-168, 1-169, 1-193, 1-195, 1-196, 1-197, 1-198, 1-199, 1-200, 1-201
XB-06074	1-349
XB-06180	1-117, 1-119, 1-120, 1-147, 1-149, 1-150
XB-06300	1-349
XB-06329-1	1-161, 1-163, 1-164, 1-165, 1-166, 1-167, 1-168, 1-169, 1-193, 1-195, 1-196, 1-197, 1-198, 1-199, 1-200, 1-201
XB-06330	1-161, 1-163, 1-164, 1-165, 1-166, 1-167, 1-168, 1-169, 1-193, 1-195, 1-196, 1-197, 1-198, 1-199, 1-200, 1-201
XB-06336	1-9, 1-10, 1-11, 1-12, 1-15, 1-69, 1-72, 1-75, 1-93, 1-94, 1-95, 1-96, 1-99, 1-161, 1-162, 1-163, 1-164, 1-165, 1-166, 1-167, 1-168, 1-169, 1-193, 1-194, 1-195, 1-196, 1-197, 1-198, 1-199, 1-200, 1-201
XB-06377	1-161, 1-165, 1-166, 1-193, 1-197, 1-198, 1-404, 1-407
XB-06378	1-117, 1-118, 1-119, 1-120, 1-147, 1-149, 1-150, 1-404, 1-407
XB-06570	1-12, 1-72, 1-96, 1-352
XB-06583	1-12, 1-72, 1-96, 1-352
XB-06936	1-163, 1-164, 1-165, 1-166, 1-167, 1-168, 1-169, 1-195, 1-196, 1-197, 1-198, 1-199, 1-200, 1-201

 Amendments and errors reserved. © SAF-HOLLAND, Inc.

SAF-HOLLAND Group

PART NUMBER	PAGE NO.
XB-06936	1-163, 1-164, 1-165, 1-166, 1-167, 1-168, 1-169, 1-195, 1-196, 1-197, 1-198, 1-199, 1-200, 1-201
XB-07291	1-9, 1-11, 1-13, 1-14, 1-16, 1-17, 1-69, 1-71, 1-73, 1-75, 1-93, 1-95, 1-97, 1-98, 1-347, 1-350, 1-351, 1-371, 1-373
XB-07398	1-9, 1-10, 1-13, 1-14, 1-15, 1-16, 1-17, 1-42, 1-69, 1-70, 1-73, 1-74, 1-75, 1-93, 1-94, 1-97, 1-98, 1-99, 1-347, 1-350, 1-351, 1-352, 1-371, 1-373
XB-07431	1-9, 1-10, 1-13, 1-14, 1-15, 1-16, 1-17, 1-93, 1-94, 1-97, 1-98, 1-99, 1-347, 1-350, 1-351, 1-371, 1-373
XB-07508	1-9, 1-11, 1-12, 1-13, 1-14, 1-15, 1-16, 1-17, 1-69, 1-71, 1-72, 1-73, 1-75, 1-93, 1-95, 1-96, 1-97, 1-98, 1-99
XB-07610	1-9, 1-13, 1-14, 1-15, 1-16, 1-17, 1-69, 1-73, 1-75, 1-93, 1-97, 1-98, 1-99
XB-07628	1-9, 1-10, 1-13, 1-14, 1-15, 1-16, 1-17, 1-69, 1-70, 1-73, 1-74, 1-75, 1-93, 1-94, 1-97, 1-98, 1-99, 1-347, 1-351, 1-352, 1-371, 1-373
XB-0769	1-305, 1-307, 1-355, 1-357, 1-404, 1-407
XB-07974	1-9, 1-11, 1-15, 1-69, 1-72, 1-75, 1-93, 1-95, 1-96, 1-99
XB-07974-P	1-12
XB-08002	1-305
XB-08558	1-161, 1-163, 1-164, 1-165, 1-166, 1-167, 1-168, 1-169, 1-193, 1-195, 1-196, 1-197, 1-198, 1-199, 1-200, 1-201
XB-08559	1-9, 1-10, 1-13, 1-15, 1-17, 1-93, 1-94, 1-97, 1-98, 1-347, 1-350, 1-351, 1-371, 1-373
XB-08559-P	1-14, 1-16

PART NUMBER	PAGE NO.
XB-08764	1-161, 1-163, 1-164, 1-165, 1-166, 1-167, 1-168, 1-169, 1-193, 1-195, 1-196, 1-197, 1-198, 1-199, 1-200, 1-201
XB-08894	1-361
XB-08905	1-147, 1-148, 1-150
XB-08914	1-311
XB-08931	1-69, 1-71, 1-93, 1-94, 1-95, 1-147, 1-148, 1-194
XB-08974	1-347
XB-08987	1-347
XB-09031	1-135, 1-137, 2-43, 2-45
XB-09153	1-307, 1-357
XB-09155	1-9, 1-10, 1-12, 1-15, 1-69, 1-72, 1-75, 1-93, 1-94, 1-96, 1-99
XB-09174	1-215, 1-217, 1-218, 1-404, 1-407
XB-09183	1-93, 1-94, 1-193, 1-194
XB-09184-1	1-93, 1-94, 1-193, 1-194
XB-09185	1-93, 1-94
XB-09407	1-215, 1-217, 1-218, 1-305, 1-307, 1-404, 1-407
XB-09408	1-161, 1-162, 1-163, 1-165, 1-167, 1-169, 1-193, 1-194, 1-195, 1-197, 1-199, 1-201
XB-09422	1-11, 1-71, 1-95, 1-119, 1-136, 1-148, 1-194, 1-242, 1-256
XB-09495	1-161, 1-163, 1-164, 1-165, 1-166, 1-167, 1-168, 1-169, 1-193, 1-195, 1-196, 1-197, 1-198, 1-199, 1-200, 1-201
XB-09517-1	1-161, 1-163, 1-165, 1-167, 1-169, 1-193, 1-195, 1-197, 1-199, 1-201
XB-09581	1-161, 1-162, 1-164, 1-166, 1-168, 1-193, 1-194, 1-196, 1-198, 1-200
XB-09629	1-161, 1-162, 1-164, 1-166, 1-168, 1-193, 1-194, 1-196, 1-198, 1-200

PART NUMBER	PAGE NO.
XB-10035	1-350, 1-371, 1-373
XB-1006	1-215, 1-217, 1-218, 1-404, 1-407
XB-1007	1-215, 1-217, 1-218, 1-305, 1-307, 1-311, 1-313, 1-355, 1-357, 1-404, 1-407
XB-10259	1-69, 1-70, 1-73, 1-75
XB-10267	1-359, 1-368, 1-387
XB-1028	1-215, 1-216, 1-217, 1-404, 1-407
XB-1028-1	1-41, 1-42, 1-43, 1-44, 1-45, 1-46, 1-161, 1-165, 1-166, 1-193, 1-197, 1-198, 1-359, 1-368, 1-3751-376, 1-387, 1-393, 1-395, 1-397, 1-400
XB-1028-2	1-305, 1-307, 1-311, 1-313, 1-355, 1-357
XB-10294	1-69, 1-70, 1-73, 1-74, 1-75, 1-117, 1-118, 1-120, 1-135, 1-137, 1-147, 1-150
XB-1030	1-215, 1-217, 1-218, 1-350, 1-371, 1-373, 1-404, 1-407
XB-1030-1	1-41, 1-43, 1-44, 1-45, 1-46, 1-359, 1-368, 1-375, 1-376, 1-387, 1-393, 1-395, 1-397, 1-401
XB-1031	1-215, 1-217, 1-218, 1-404, 1-407
XB-10316	2-43
XB-10327	1-307, 1-357
XB-10424	1-117, 1-120
XA-FW-108-D	1-305, 1-355, 3-34
XA-FW-108-D-1	1-311, 1-313, 3-33
XB-10424-AL	1-150
XB-1044	1-41, 1-42, 1-43, 1-44, 1-45, 1-46, 1-215,1-216, 1-217, 1-218, 1-397, 1-401, 1-404, 1-407
XB-10456	1-69, 1-75
XB-10489-P	1-117, 1-119, 1-120, 1-135, 1-136, 1-137, 1-147, 1-148, 1-150
XB-10490-P	1-117, 1-119, 1-120, 1-135, 1-136, 1-137, 1-147, 1-148, 1-149, 1-150
XB-10563	1-117, 1-120

 Amendments and errors reserved. © SAF-HOLLAND, Inc.

PART NUMBER	PAGE NO.
XB-10563	1-117, 1-120
XB-10563-1-P	1-147. 1-150
XB-10605	1-11, 1-95, 1-119, 1-136, 1-149, 1-242, 1-256, 2-22, 2-24, 2-26, 2-28
XB-10614	1-117, 1-120
XB-10755	1-117, 1-119, 1-147, 1-149, 1-150
XB-10809	2-22, 2-24, 2-26
XB-10814	2-22, 2-24, 2-26, 2-28
XB-10996	1-241, 1-242, 1-243, 1-244, 1-255, 1-256, 1-257, 1-258
XB-11025	1-241, 1-244, 1-255, 1-258
XB-11026	1-120
XB-1108	1-161, 1-163, 1-165, 1-167, 1-169, 1-193, 1-195, 1-197, 1-199, 1-201
XB-11089	1-241, 1-242, 1-243, 1-255, 1-256, 1-257
XB-11091	1-241, 1-242, 1-243, 1-244, 1-255, 1-256, 1-257, 1-258
XB-11127	1-241, 1-242, 1-243, 1-244, 1-255, 1-256, 1-257, 1-258, 1-269, 1-270, 1-271, 1-317, 1-318
XB-11157-1	2-28
XB-11251	1-12, 1-72, 1-96, 1-352
XB-1127	1-9, 1-10, 1-13, 1-14, 1-15, 1-16, 1-17, 1-41, 1-43, 1-44, 1-45, 1-46, 1-69, 1-70, 1-73, 1-74, 1-75, 1-93, 1-94, 1-97, 1-98, 1-99, 1-393, 1-395, 1-397, 1-401
XB-11296	2-22, 2-24, 2-26, 2-28
XB-11297	2-22, 2-24, 2-26, 2-28
XB-11298	2-22, 2-24, 2-26, 2-28
XB-11486	2-28
XB-116	1-349
XB-1204	1-161, 1-165, 1-166, 1-193, 1-197, 1-198
XB-1316	1-375
XB-15	1-215, 1-217, 1-218, 1-404, 1-407

PART NUMBER	PAGE NO.
XB-1505	1-9, 1-10, 1-13, 1-14, 1-15, 1-16, 1-17, 1-41, 1-43, 1-44, 1-45, 1-46, 1-69, 1-70, 1-73, 1-74, 1-75, 1-93, 1-94, 1-97, 1-98, 1-99, 1-347, 1-351, 1-359, 1-368, 1-371, 1-373, 1-375, 1-376, 1-387, 1-393, 1-395, 1-397,1-401
XB-16	1-41, 1-42, 1-43, 1-44, 1-45, 1-46, 1-119, 1-136, 1-215, 1-216, 1-217, 1-218, 1-305, 1-307, 1-311, 1-313, 1-355, 1-357, 1-397, 1-401, 1-404, 1-407
XB-1604-5	1-349, 1-371, 1-413
XB-1604-9	1-305, 1-413
XB-161-10740	1-136
XB-2001	1-311, 1-313, 1-355, 1-357
XB-2083	1-9, 1-10, 1-11, 1-12, 1-13, 1-14, 1-15, 1-16, 1-17, 1-41, 1-43, 1-44, 1-45, 1-46, 1-69, 1-70, 1-71, 1-72, 1-73, 1-74, 1-75, 1-93, 1-94, 1-96, 1-97, 1-98, 1-99, 1-117, 1-118, 1-119, 1-120, 1-147, 1-150, 1-215, 1-217, 1-218, 1-305, 1-307, 1-311, 1-313, 1-347, 1-351, 1-355, 1-357, 1-359, 1-368, 1-371, 1-373, 1-375, 1-387, 1-393, 1-395, 1-397, 1-401, 1-404, 1-407
XB-2083	2-22, 2-24, 2-26, 2-28, 2-30, 2-34, 2-38, 2-46, 2-48, 2-50
XB-2149	1-9, 1-13, 1-14, 1-15, 1-16, 1-17, 1-41, 1-43, 1-44, 1-45, 1-46, 1-69, 1-73, 1-74, 1-75, 1-93, 1-97, 1-98, 1-99, 1-347, 1-351, 1-359, 1-368, 1-371, 1-373, 1-375, 1-376, 1-387, 1-393, 1-395, 1-397, 1-401
XB-21-S-250-1250	1-355
XB-21-S-250-1875	1-45, 1-46, 1-404, 1-407
XB-21-S-375-1750	1-41, 1-42, 1-215, 1-216, 1-305, 1-350, 1-373

PART NUMBER	PAGE NO.
XB-21-S-375-1750Z	1-11
XB-21-S-375-3000	1-360, 1-361
XB-21-S-500-2750	1-13, 1-15, 1-41, 1-43, 1-44, 1-45, 1-46, 1-161, 1-163, 1-164, 1-165, 1-166, 1-167, 1-168, 1-169, 1-193, 1-195, 1-196, 1-197, 1-198, 1-199, 1-200, 1-201, 1-347, 1-351, 1-359, 1-368, 1-371, 1-373, 1-375, 1-376, 1-387, 1-393, 1-395, 1-397, 1-401
XB-21-S-500-2750-P	1-9, 1-16, 1-17, 1-69, 1-73, 1-74, 1-75, 1-93, 1-97, 1-99
XB-2502	2-30, 2-34, 2-38, 2-46, 2-48, 2-50, 2-63, 2-65
XB-2556	1-362, 1-363, 1-375
XB-2774-3	1-360, 1-361
XB-2774-4	1-360, 1-361
XB-2779-1	1-349
XB-2781-1	1-362, 1-363
XB-2781-1-A	1-362, 1-363
XB-2782-1	1-362, 1-363
XB-2783	1-362
XB-06583	1-12, 1-72, 1-96, 1-352
XB-2783-A	1-363
XB-2784	1-362, 1-369
XB-2785	1-362, 1-369
XB-2785-2	1-363, 1-369
XB-2786	1-363, 1-369
XB-2786-1	1-362, 1-369
XB-2790	1-362, 1-369
XB-2790-3	1-369
XB-2791	1-362, 1-369
XB-2792	1-362, 1-369
XB-2794-1	1-362, 1-369
XB-2794-2	1-363, 1-369
XB-2795	1-362, 1-369
XB-2798-1	1-362, 1-369
XB-2896	1-375
XB-2928	1-360, 1-361
XB-2930	1-360
XB-2930-A	1-361
XB-2932	1-362, 1-369

 Amendments and errors reserved. © SAF-HOLLAND, Inc.

SAF-HOLLAND Group

PART NUMBER	PAGE NO.
XB-2933	1-363, 1-369
XB-2934	1-362, 1-363, 1-369
XB-2936	1-360, 1-361
XB-2936-1	1-360, 1-361
XB-2937	1-362, 1-369
XB-2938	1-362, 1-369
XB-2939	1-362, 1-369
XB-338	1-161, 1-193, 1-360, 1-361, 1-375, 2-30, 2-34, 2-38
XB-382	1-355, 2-55, 2-57, 2-59, 2-61, 2-63, 2-65
XB-403	1-215, 1-217, 1-218, 1-305, 1-307, 1-311, 1-313, 1-349, 1-355, 1-357, 1-404, 1-407
XB-4514	1-349
XB-4530-5	1-350
XB-4574	1-349
XB-4575-2	1-349
XB-5	1-41, 1-42, 1-43, 1-44, 1-135, 1-136, 1-137, 1-161, 1-163, 1-164, 1-165, 1-166, 1-167, 1-168, 1-169, 1-193, 1-195, 1-196, 1-197, 1-198, 1-199, 1-200, 1-201, 1-215, 1-216, 1-217, 1-218, 1-305, 1-307, 1-311, 1-313, 1-355, 1-357, 1-359, 1-368, 1-375, 1-376, 1-387, 1-393, 1-395, 1-397, 1-401, 1-407
XB-6005	1-393
XB-60144	1-149
XB-6752	1-349
XB-6764	1-349
XB-6768	1-349
XB-6769	1-349
XB-6771	1-349
XB-6834	1-117, 1-118, 1-120, 1-349, 1-360, 1-361
XB-6848	1-349
XB-6854	1-349
XB-697	1-349
XB-698	1-347, 1-351, 1-371, 1-373
XB-70	1-355, 1-375
XB-758	2-22, 2-24, 2-26, 2-28

PART NUMBER	PAGE NO.
XB-767	1-360, 1-361, 1-375, 1-393, 1-395, 1-397, 1-400
XB-767-C	1-161, 1-165, 1-166, 1-193, 1-197, 1-198, 1-311, 1-313
XB-769	1-311
XB-772	1-311
XB-780-1	1-355
XB-781-1	1-355
XB-847	2-55, 2-57, 2-59, 2-61, 2-63, 2-65
XB-9	1-375
XB-B724	1-23, 1-81, 1-105, 1-127, 1-143, 1-155, 1-250, 1-264
XB-BFW0118	1-389
XB-BFW0170-01	1-389
XB-BFW0172	1-389, 1-391
XB-BHRO-12-C-434	1-349
XB-BR-118-C-7	1-347, 1-371, 3-29
XB-BR-12-C-4	1-349, 1-360, 1-361, 1-387
XB-09408	1-161, 1-162, 1-163, 1-165, 1-167, 1-169, 1-193, 1-194, 1-195, 1-197, 1-199, 1-201
XB-C-375-C-125	2-30, 2-34, 2-38
XB-C-375-C-150	1-355
XB-C-38-C-1	1-9, 1-12, 1-96, 1-147
XB-C-38-C-214	1-161, 1-163, 1-165, 1-167, 1-169, 1-193, 1-195, 1-197, 1-199, 1-201, 1-360, 1-361
XB-C-41	1-311
XB-C-516-C-112	1-349
XB-C-516-F-34	1-349
XB-C-59	1-349, 2-55, 2-57, 2-59, 2-60, 2-63, 2-65
XB-C-95	1-9, 1-11, 1-69, 1-71, 1-93, 1-95, 1-117, 1-119, 1-120, 1-135, 1-136, 1-137, 1-147, 1-149, 1-150, 1-161, 1-162, 1-163, 1-164, 1-165, 1-166, 1-167, 1-168, 1-169, 1-193, 1-194, 1-195, 1-196, 1-197, 1-198, 1-199, 1-200, 1-201, 1-241, 1-242, 1-255, 1-256, 1-269, 1-317

PART NUMBER	PAGE NO.
XB-CLP-052-25	1-389, 1-391, 3-35
XB-CLP-052-26	1-389, 1-391
XB-CTP-014-51	1-389, 1-391
XB-CTP-014-59	1-389, 1-391
XB-CX-58-F-134	1-9, 1-10, 1-12, 1-13, 1-14, 1-15, 1-16, 1-17, 1-41, 1-43, 1-44, 1-45, 1-46, 1-69, 1-70, 1-72, 1-73, 1-75, 1-93, 1-94, 1-96, 1-97, 1-98, 1-99, 1-359, 1-368, 1-375, 1-376, 1-387, 1-393, 1-395, 1-397, 1-401
XB-E-536	1-347, 1-371
XB-E-540	1-375
XB-E-541	1-117, 1-120, 1-393, 1-397, 1-400
XB-FW-109	1-311
XB-GP-052-21	1-389, 1-391
XB-GT-13-1	1-350, 1-359, 1-368, 1-375, 1-376, 1-387, 1-393, 1-395, 1-397, 1-401
XB-H-38	1-9, 1-13, 1-14, 1-15, 1-16, 1-17, 1-41, 1-43, 1-44, 1-45, 1-46, 1-93, 1-94, 1-97, 1-98, 1-99, 1-135, 1-137, 1-161, 1-163, 1-164, 1-165, 1-166, 1-167, 1-168, 1-169, 1-193, 1-194, 1-195, 1-196, 1-197, 1-198, 1-199, 1-200, 1-201, 1-215, 1-217, 1-218, 1-244, 1-258, 1-305, 1-307, 1-311, 1-317, 1-347, 1-349, 1-351, 1-355, 1-360, 1-361, 1-371, 1-375, 1-379, 1-381, 1-387, 1-395, 1-401, 2-55, 2-57, 2-59, 2-60, 2-63, 2-65
XB-H-38-A	1-10, 1-42, 2-55, 2-57, 2-59, 2-60, 2-63, 2-65
XB-H-38-C	1-16, 1-167, 1-168, 1-199, 1-200, 1-360
XB-H-38-F	2-55, 2-57, 2-59, 2-60, 2-63, 2-65
XB-HCS-M12-20-Z	1-147, 1-149, 1-150
XB-HCS-M12-40-Z	1-135, 1-137, 1-147, 1-149, 1-150, 2-28
XB-HCS-M16-50-Z	1-147

 Amendments and errors reserved. © SAF-HOLLAND, Inc.

PART NUMBER	PAGE NO.
XB-HCS-M16-60-Z	2-22, 2-24, 2-26, 2-28
XB-HHC-050-52	1-389
XB-HLN-M12-Z	1-147, 1-149, 1-150
XB-HNH-34-F	1-9, 1-10, 1-12, 1-13, 1-14, 1-15, 1-16, 1-17, 1-41, 1-43, 1-44, 1-45, 1-46, 1-69, 1-70, 1-73, 1-74, 1-75, 1-93, 1-94, 1-96, 1-97, 1-98, 1-99, 1-393, 1-395, 1-397, 1-401
XB-HNH-58-C	1-305, 1-307, 1-311, 1-313, 1-355, 1-357
XB-LW-M12-Z	2-28
XB-LW-M16-Z	1-147, 2-22, 2-24, 2-26, 2-28
XB-NR-118-C	1-347
XB-NRJ-34-F	1-215, 1-218
XB-PW-016-03	1-389
XB-PW-016-17	1-9, 1-12, 1-14, 1-16, 1-17, 1-69, 1-71, 1-72, 1-73, 1-75, 1-93, 1-95, 1-96, 1-97, 1-98, 1-99, 1-389
XB-PW-1316-112	1-10, 1-13, 1-15, 1-41, 1-43, 1-44, 1-45, 1-46, 1-94, 1-311, 1-393, 1-395, 1-397, 1-401
XB-PW-1316-112-P	1-9, 1-14, 1-16, 1-17, 1-69, 1-70, 1-73, 1-74, 1-75, 1-93, 1-97, 1-98, 1-99
XB-PW-1732-1-116	1-11, 1-13, 1-15, 1-41, 1-42, 1-43, 1-44, 1-45, 1-46, 1-117, 1-119, 1-120, 1-136, 1-215, 1-216, 1-217, 1-218, 1-347, 1-350, 1-351, 1-359, 1-368, 1-371, 1-373, 1-375, 1-376, 1-387, 1-393, 1-395, 1-397, 1-400
XB-PWC-38-78	1-161, 1-165, 1-166, 1-193, 1-197, 1-198
XB-PWM-38-78	1-93, 1-94, 1-241, 1-243, 1-255, 1-257
XB-SHS-007-02	1-389
XB-SLN-012-46	1-389
XB-SP0050-73	1-389
XB-SP0050-97	1-389
XB-SPG-020-06	1-389
XB-SPG-020-21	1-389, 1-391
XB-SPG-202-08	1-389
XB-T-199	1-161, 1-162, 1-163, 1-164, 1-165, 1-166, 1-167, 1-168, 1-169, 1-193, 1-194, 1-195, 1-196, 1-197, 1-198, 1-199, 1-200, 1-201, 1-241, 1-242, 1-243, 1-244, 1-255, 1-256, 1-257, 1-258, 1-269, 1-270, 1-271, 1-317, 1-318
XB-T-307	1-311, 1-313
XB-T-45-1	1-349, 1-393, 1-397, 1-400, 2-57, 2-59, 2-60, 2-63, 2-65
XB-T-49	1-9, 1-11, 1-13, 1-14, 1-15, 1-16, 1-17, 1-41, 1-42, 1-43, 1-44, 1-45, 1-46, 1-69, 1-71, 1-72, 1-73, 1-75, 1-93, 1-95, 1-96, 1-97, 1-98, 1-99, 1-161, 1-215, 1-216, 1-217, 1-218, 1-241, 1-242, 1-243, 1-244, 1-255, 1-256, 1-257, 1-258, 1-305, 1-307, 1-311, 1-313, 1-318, 1-327, 1-355, 1-357, 1-359, 1-368, 1-375, 1-376, 1-387, 1-393, 1-395, 1-397, 1-400, 1-404, 1-407
XB-T-49-P	1-12
XB-T-60	1-305, 1-307, 1-311, 1-313, 1-355, 1-393, 1-395, 1-397, 1-400
XB-T-61	1-9, 1-12, 1-96, 1-147, 1-355
XB-T-69	1-328
XB-T-69-A	1-9, 1-10, 1-11, 1-12, 1-13, 1-14, 1-15, 1-16, 1-17, 1-41, 1-43, 1-44, 1-45, 1-46, 1-69, 1-70, 1-71, 1-72, 1-73, 1-75, 1-93, 1-94, 1-95, 1-96, 1-97, 1-98, 1-99, 1-117, 1-119, 1-120, 1-135, 1-136, 1-137, 1-147, 1-149, 1-150, 1-161, 1-162, 1-163, 1-164, 1-165, 1-166, 1-167, 1-168, 1-169, 1-193, 1-194, 1-195, 1-196, 1-197, 1-198, 1-199, 1-200, 1-201, 1-241, 1-242, 1-255, 1-256, 1-269, 1-305, 1-307, 1-311, 1-313, 1-317,
XB-T-69-A	1-347, 1-350, 1-351, 1-355, 1-357, 1-359, 1-368, 1-371, 1-373, 1-375, 1-376, 1-387, 1-393, 1-395, 1-397, 1-401, 1-404, 1-407, 2-28, 2-30, 2-34, 2-38, 2-46, 2-48, 2-50
XB-T-89-5	1-350, 1-371, 1-373, 1-375, 1-376
XB-T-95-5	1-351
XB-T-97	1-375
XB-T-99	1-147, 1-375
XB-T-9N-2	1-305
XB-V-1025	1-215, 1-218
XB-V-444-3	1-161, 1-193
XB-V-919	1-215, 1-218
XB-V-932	1-215, 1-218
XD-06328	1-161, 1-163, 1-164, 1-165, 1-166, 1-167, 1-168, 1-169, 1-193, 1-195, 1-196, 1-197, 1-198, 1-199, 1-200, 1-201
XD-08908	1-9, 1-11, 1-69, 1-71, 1-75, 1-93, 1-95, 1-117, 1-119, 1-135, 1-136, 1-193, 1-194, 1-241, 1-242, 1-243, 1-244, 1-255, 1-256, 1-257, 1-258
XD-10680-P	1-147, 1-149, 1-150
XD-10689-2L	2-22, 2-24, 2-26, 2-28
XD-10689-2R	2-22, 2-24, 2-26, 2-28
XD-10689-3L	2-22, 2-24, 2-26, 2-28
XD-10689-3R	2-22, 2-24, 2-26, 2-28
XD-10689-IL	2-22, 2-24, 2-26, 2-28
XD-10689-IR	2-22, 2-24, 2-26, 2-28
XD-10923	1-147, 1-148
XD-11121	1-241, 1-242, 1-243, 1-244, 1-255, 1-256, 1-257, 1-258
XD-3123-1	1-215, 1-217, 1-218, 1-305, 1-307, 1-311, 1-313, 1-355, 1-357, 1-404, 1-407
XE-02759	1-305, 3-27
XE-06356-P	1-9, 1-11, 1-69, 1-71, 1-93, 1-95, 1-119, 1-135, 1-136, 1-147, 1-149, 1-161, 1-162, 1-193, 1-194, 1-241, 1-242, 1-255, 1-256, 1-347, 3-26

 Amendments and errors reserved. © SAF-HOLLAND, Inc.

PART NUMBER	PAGE NO.
XE-09415	1-161, 1-163, 1-164, 1-165, 1-166, 1-167, 1-168, 1-169, 1-193, 1-195, 1-196, 1-197, 1-198, 1-199, 1-200, 1-201
XE-10474	1-161, 1-163, 1-164, 1-165, 1-166, 1-167, 1-168, 1-169, 1-193, 1-195, 1-196, 1-197, 1-198, 1-199, 1-200, 1-201
XL-FW360	1-162
XL-FW361	1-162, 1-163, 1-164, 1-165, 1-166, 1-167, 1-168, 1-169, 1-194, 1-195, 1-196, 1-197, 1-198, 1-199, 1-200, 1-201
XL-FW534	1-243, 1-257
XL-RK-NT-ILS-S	2-28

GLOSSARY	
Fifth Wheel Assembly	Includes Fifth Wheel (aka top plate) and Stationary Brackets or Slider (bracket and slide plate) Assembly
ILS	Integrated Low-weight Slider system
Inboard Mount	Mounting plate/bracket that is designed to be welded to angles that come up the side of the frame and inward towards the center of the chassis
Inboard Mount with Angles	Mounting plate/bracket that has inboard mount angles attached for a specific frame width (frame width to be provided by customer). Note: Angles are not drilled for the frame.
Legacy	Traditional Style Numbering System for Fifth Wheel Assemblies, Top Plates, and mounting systems
Low Lube	Fifth Wheel requires no lube on the face but does require lubrication to the jaws
No Lube	Fifth Wheel requires no lube on the face or the jaws
Outboard Mount	Mounting plate/bracket that is designed to be bolted to angles that come up the side of the frame and outward towards the tires
Traditional	The “old” style numbers system for Fifth Wheel Assemblies, Top Plate, and Mounting Systems (Generally Manufactured as Assemblies prior to 2006)

XL-FW10081PM-en-US Rev D 2016-03-01 Amendments and errors reserved. © SAF-HOLLAND, Inc.

SAF-HOLLAND ORIGINAL PARTS™

From fifth wheel rebuild kits to suspension bushing repair kits, SAF-HOLLAND Original Parts are the same quality components used in the original component assembly.

SAF-HOLLAND Original Parts are tested and designed to provide maximum performance and durability. Will-fits, look-alikes or worse yet counterfeit parts will only limit the performance potential and could possibly void SAF-HOLLAND's warranty. Always be sure to spec SAF-HOLLAND Original Parts when servicing your SAF-HOLLAND product.

SAF-HOLLAND USA • 800.876.3929 • Fax 800.356.3929
www.safholland.us

SAF-HOLLAND CANADA • 519.537.3494 • Fax 800.565.7753
WESTERN CANADA • 604.574.7491 • Fax 604.574.0244
www.safholland.ca

SAF-HOLLAND MEXICO • +(52) 55.5362.8743 • Fax +(52) 55.5362.8743
www.safholland.com.mx

info@safholland.com

XL-FW10081PM-en-US Rev D 03-2016 Amendments and errors reserved. © SAF-HOLLAND, Inc.

SAF-HOLLAND USA, INC.
1950 Industrial Blvd, Muskegon, MI 49442
www.safholland.com

SAF-HOLLAND
Engineering Your Road to Success